RTLSDR: driver extensions

RTL2832U + Tuner
driver extensions

64th VHF conference in
Weinheim/Germany (2019-09-07)
Stripped/Updated: 2020-08-29

Hayati Aygün

Email: h_ayguen@web.de

GPG Fingerprint:
558E C9EF 3EAB 05E8 76AF
61DC D44C 9772 6FA1 CC0B

Overview

- RTLSDR
- development
- “driver” ?
- new features – specific to R820T/2 tuner
- experiences in practice
- outlook

RTLSDR: a toy?

- DVB/DAB dongles with “RTL2832U” A/D converter chip (with E4000 or) R820T - better R820T2 - tuner
- R820T/2: 24 – 1766 MHz
- some with TCXO
- additional up-converter required for HF frequencies < 24 MHz or aliased “direct sampling” mode with V3 from RTL-SDR.com
- 8 Bit dynamic-range
  - improved by processing gain
- ~ 2.5 MHz bandwith

RTLSDR: one of many different designs

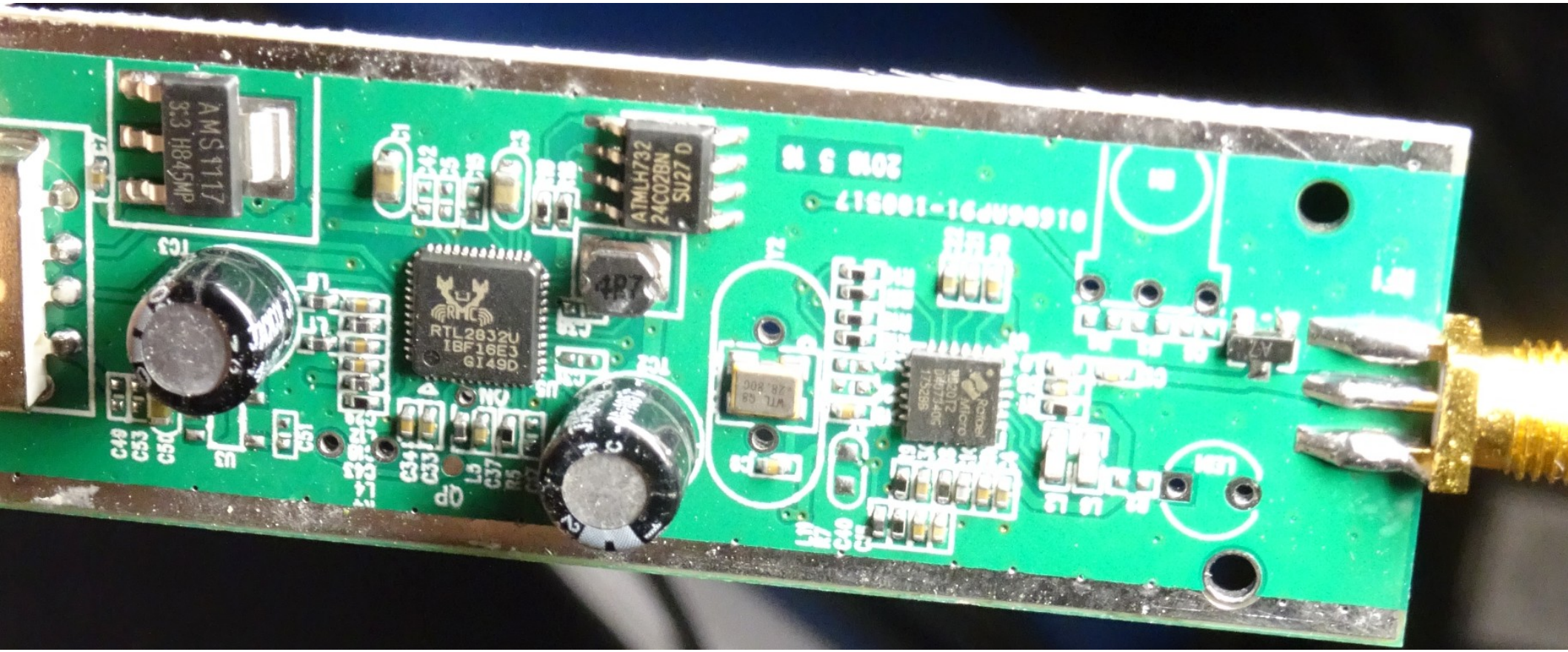

RTLSDR: simple block diagram: Tuner + RTL2832U

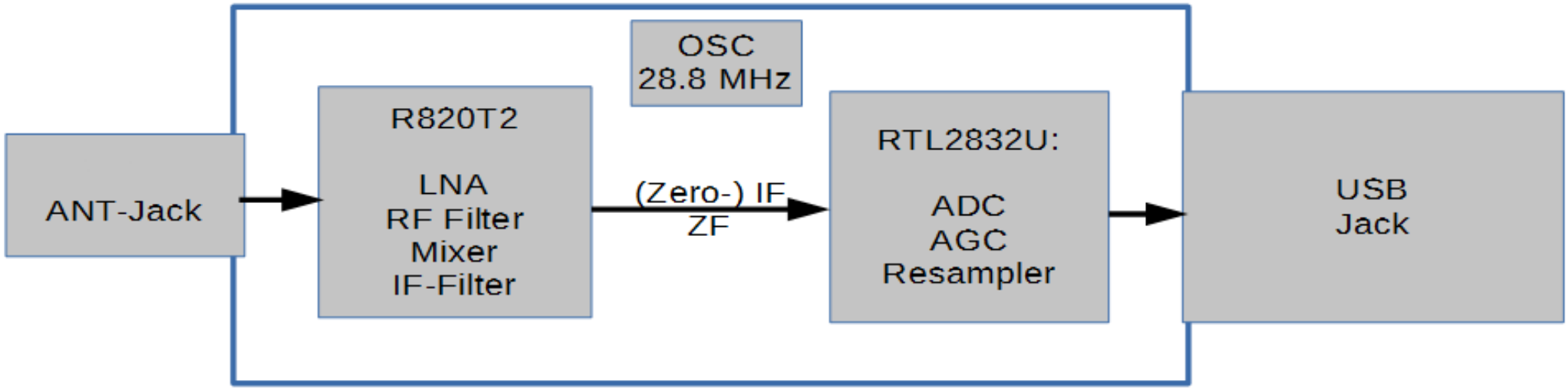

RTLSDR: supported tuners

- **tuner determines important features:**
  - frequency range(s) and gaps
  - AGC und possible manual gain settings
  - HF/RF- and also IF-filters
  - [housing, construction, quartz are also important]

- **Rafael Micro:** **R828D** **R820T** **R820T2**
- **Elonics:** **E4000 (E4K)**
- **a few more, e.g. Fiticom FC0013**

RTLSDR: Rafael Micro R820T2-Tuner

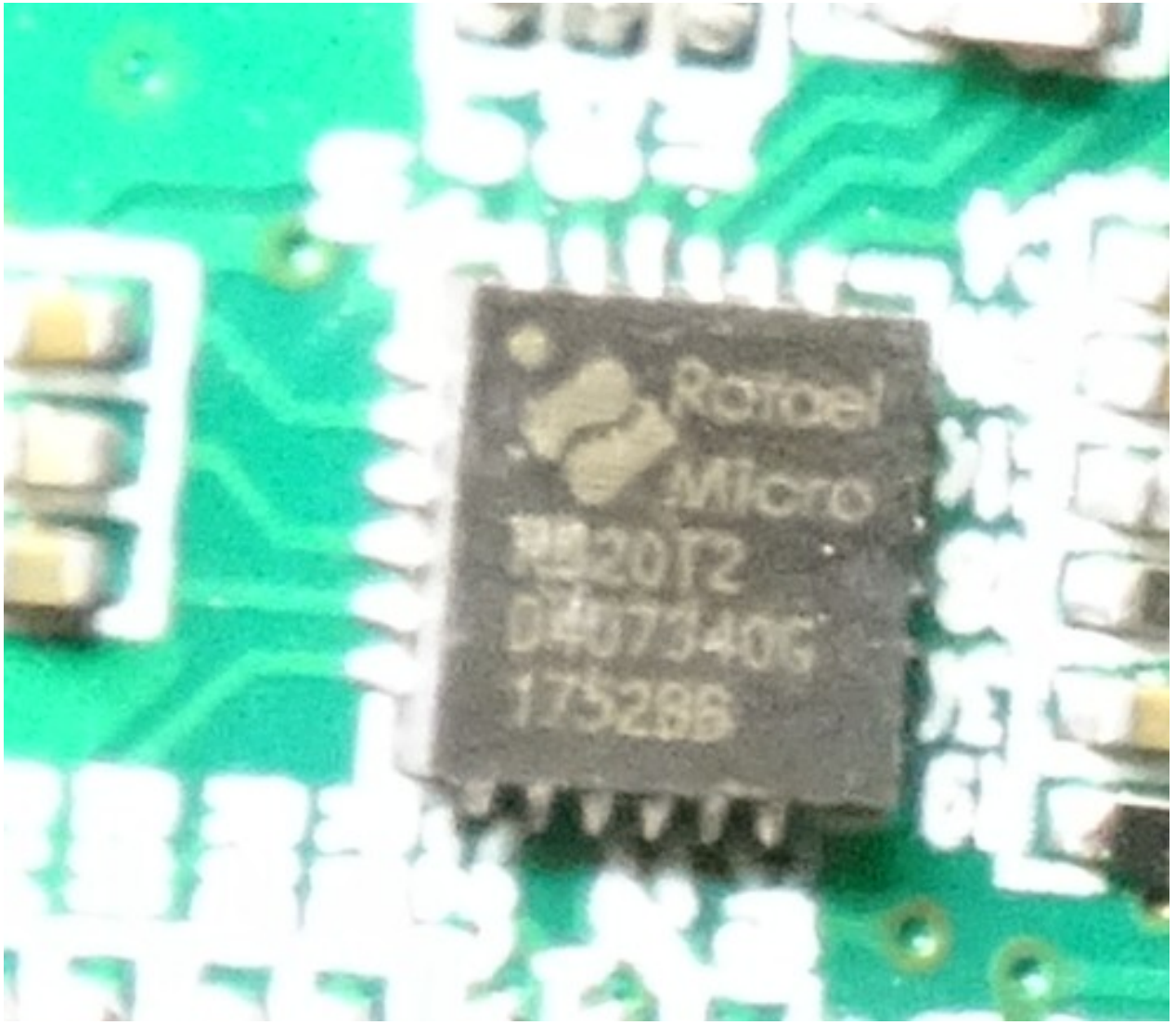

Development (1)

- worldwide Open Source development
  often using https://github.com/

- Base Team: OSMOCOM
  is often included in Linux distributions:
  https://osmocom.org/projects/rtl-sdr/wiki/Rtl-sdr

  Github “Mirror”:
  https://github.com/osmocom/rtl-sdr

  patches only by email to mailing list .. IMHO quite restrictive

Development (2)

- wordwide Open Source development
  often using https://github.com/

  some of the many developers or developments:

- https://github.com/mutability/librtlsdr
- https://github.com/keenerd/rtl-sdr
- https://github.com/dl8aau/librtlsdr
- https://github.com/librtlsdr/librtlsdr

Development (3)

own development with driver extensions
in “development” branch
https://github.com/hayguen/librtlsdr/tree/development
of https://github.com/hayguen/librtlsdr

~~should be~~ meanwhile integrated ~~“soon”~~ into
https://github.com/librtlsdr/librtlsdr
on the development branch

should be integrated “soon” into the master branch

“driver” ? (1)

- **Strictly speaking, this is not a system-driver!**
  - but only a software library
  under free GPL license

- **Library:**

  - shared library: .DLL on Windows, .so on Linux
  - static library: .lib or .a linkable (integrable) into GPL-programs
  - needs LibUSB with access on OS / driver

  ➔ **Zadig driver required on Windows, that LibUSB works**
  https://zadig.akeo.ie/

“driver” ? (2)

- **Library contains some helper programs / tools for use at command line:**
  - rtl_fm — demodulation – NOT just FM
  - rtl_sdr — streaming to pipe or saving to file
  - rtl_tcp — streaming to network – mandatory for non-GPL programs
  - rtl_test — test / identification
  - rtl_eeprom — firmware modifications, including serial number
  - rtl_raw2wav — new: convert rtl_sdr recordings into WAV
  - .. — some more

New features (1): background

In the context of the FMLIST-Scanner
https://github.com/hayguen/fmlist_scan
https://codingspirit.de/fmlist_scan_Step-by-Step.pdf

performance (“sensivity”) deficits were found for FM
(in fact: selectivity problems in combination with 8-bit ADC).
For DAB there were no such problem reports.

- The developer of
  QIRX (a DAB+ Software Defined Radio for Windows)
  also had desire for improvements
  https://softsyst.com/qirx

New features (2): development required
an IF output for measurements, e.g. filters

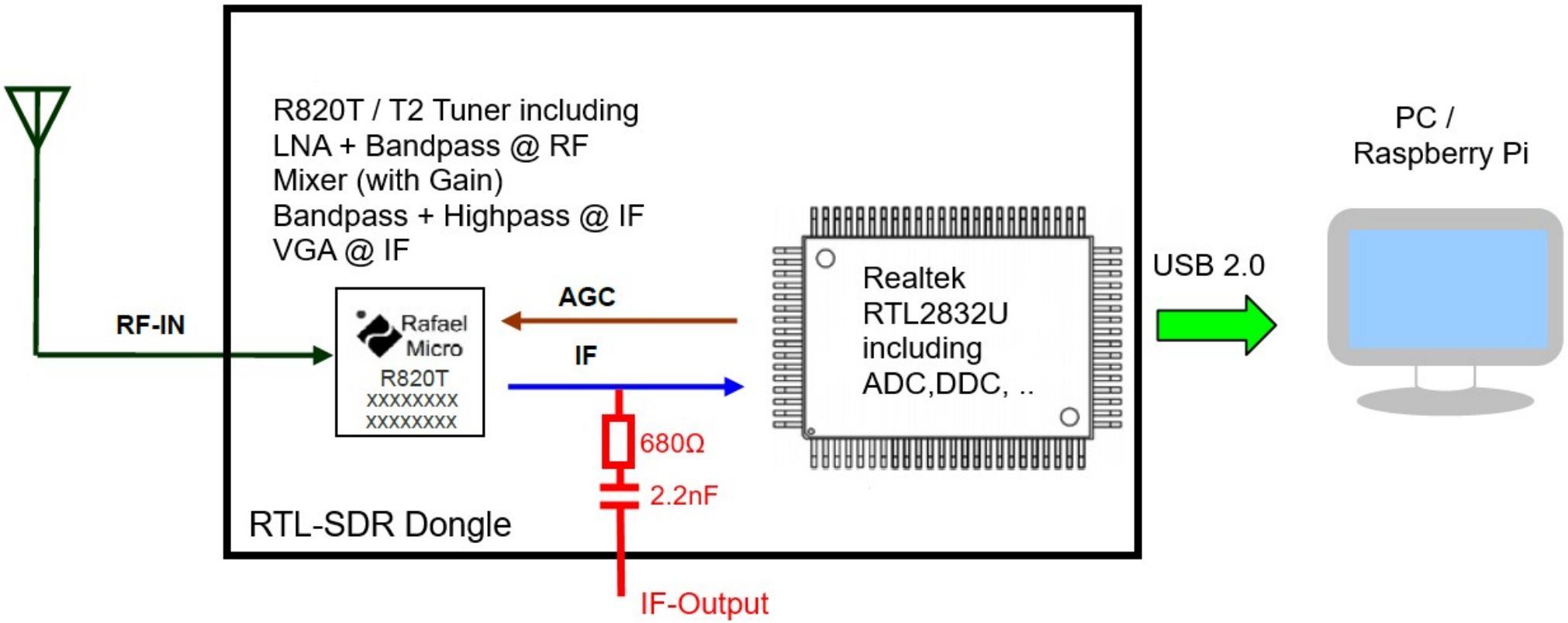

New features (3): block diagram of R820T/2 tuner

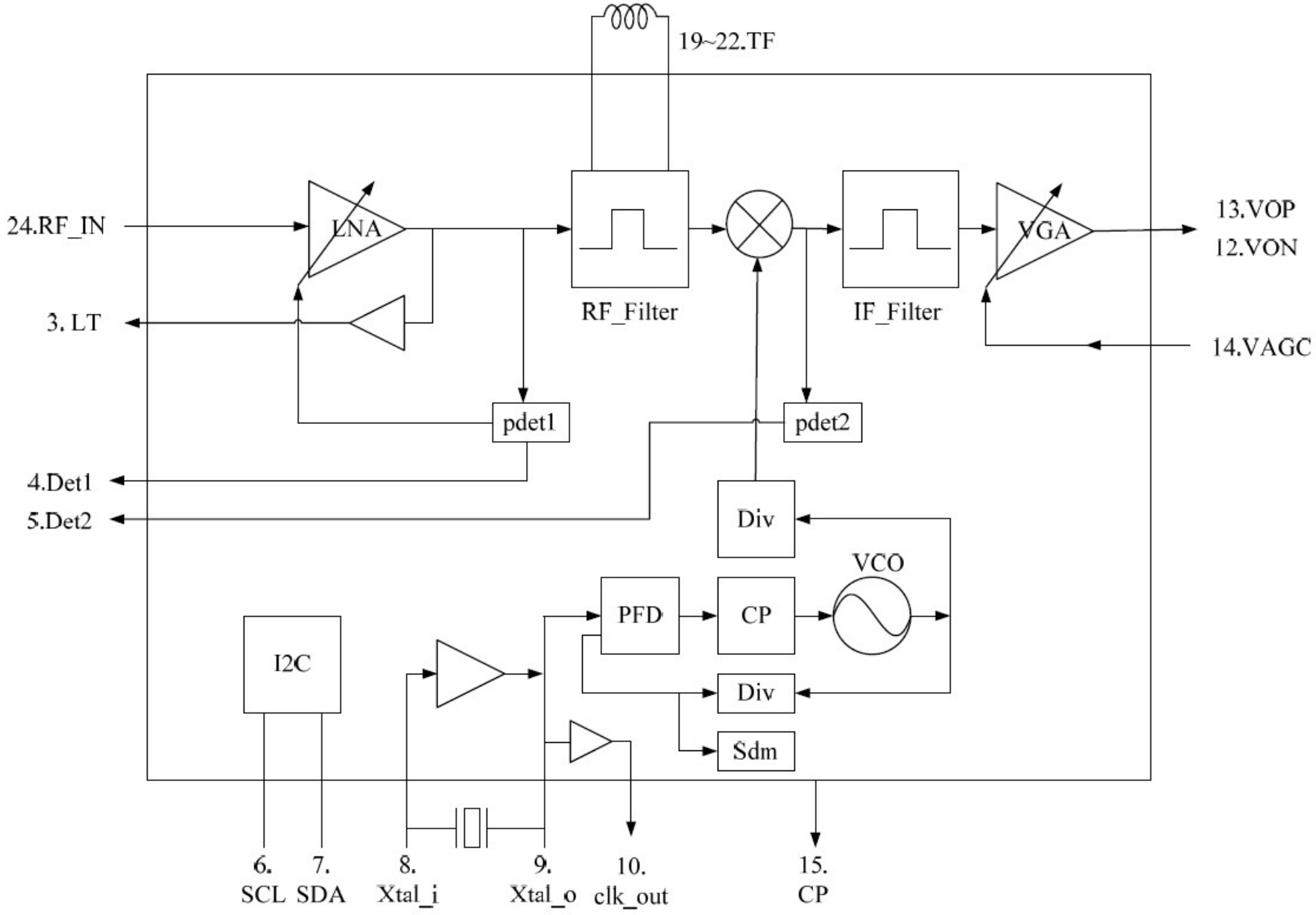

New features (4): block diagram of R820T/2 tuner

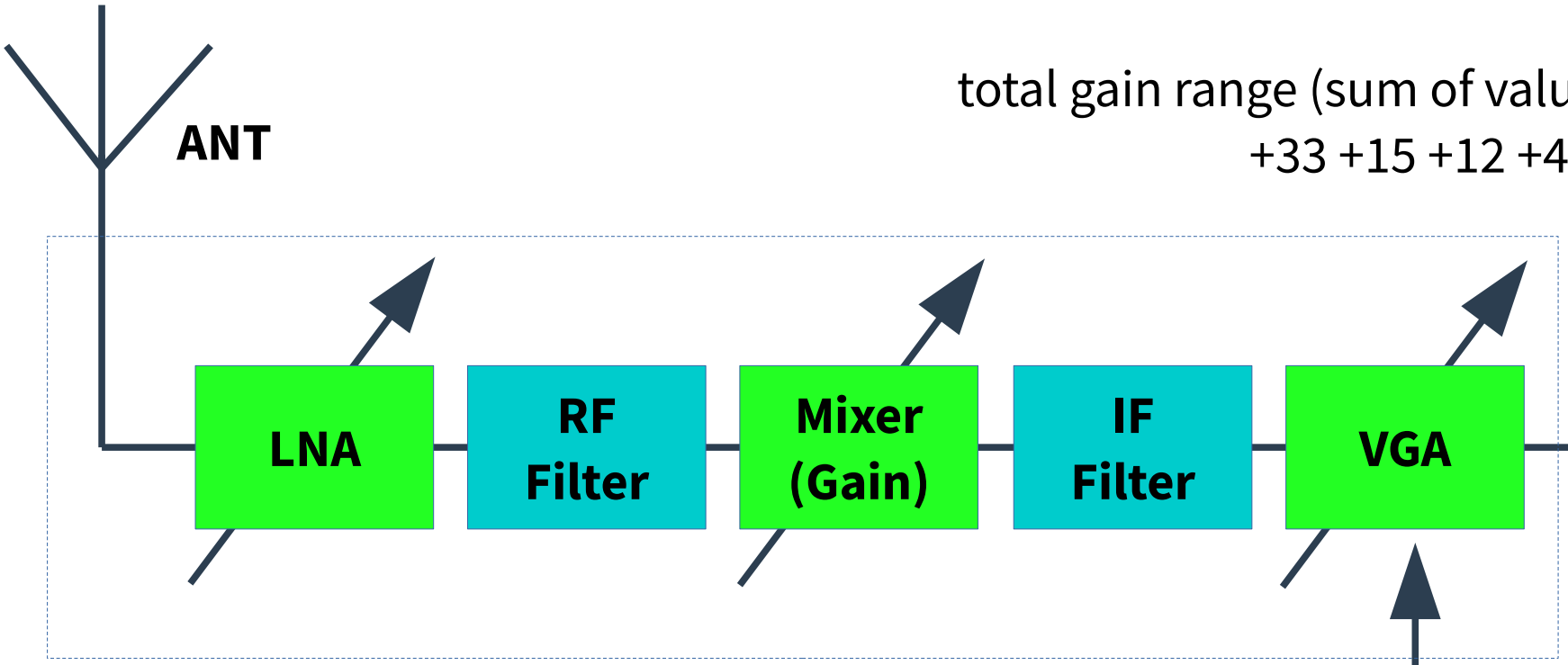

total gain range (sum of values below):
+33 +15 +12 +40 = **100 dB**

LNA	Low Noise Amplifier	~	0 .. +33 dB
Mixer	Mixer with Gain	~	0 .. +15 dB
VGA	Variable Gain Amplifier	~	-12 .. +40 dB
RF Filter	Radio Frequency preselection filter		
IF Filter	Intermediate Frequency bandpass filter		

New features (5): previous work on IF bandwidth

- Leif Asbrink, SM5BSZ and Alexander Kurpiers, DL8AAU

  in the IF (from Tuner to ADC in RTL2832)
  always ~ 1500 kHz in 3-dB point

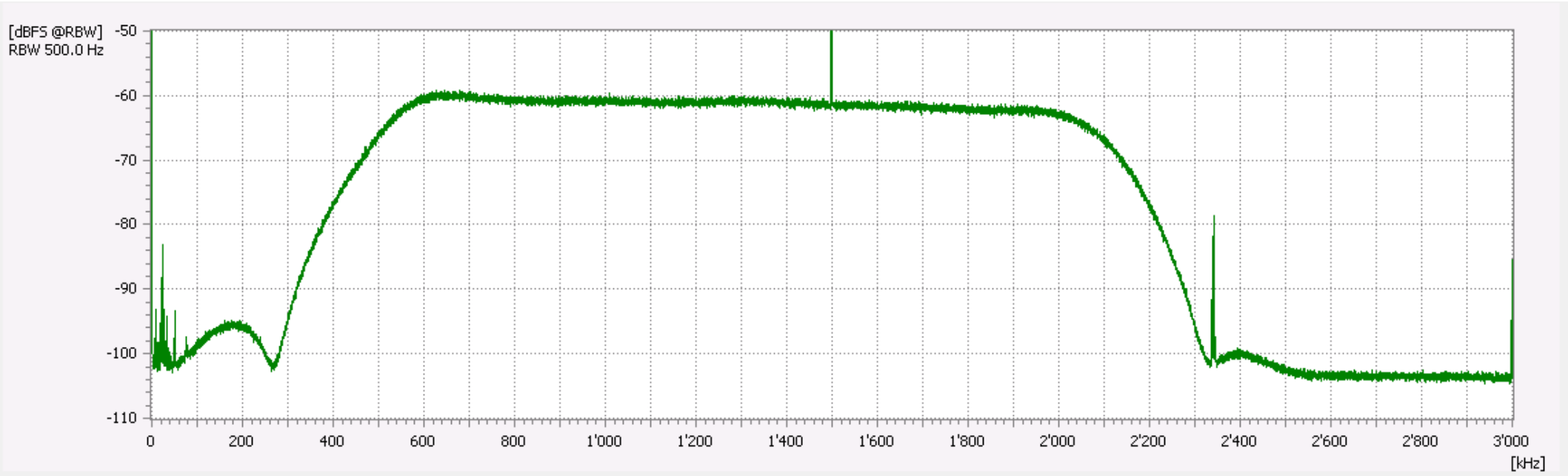

New features (6): previous work on IF bandwidth

utilize Lowpass filter of tuner

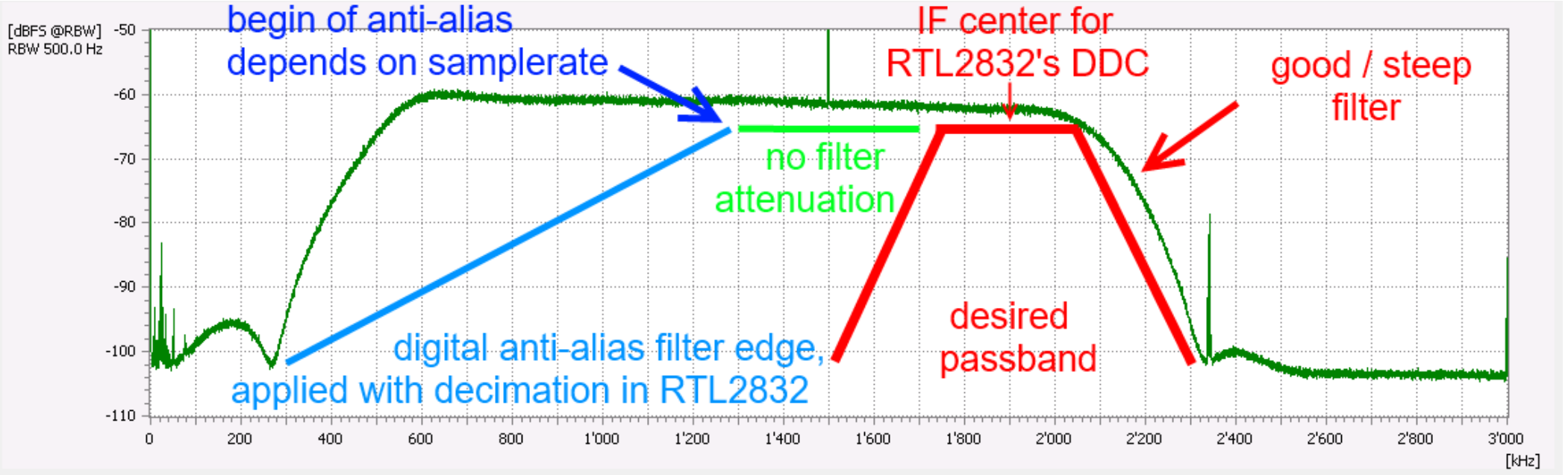

New features (7): new information

- Leaked document with I2C-register descriptions
  http://www.superkuh.com/R820T2_Register_Description.pdf

- Superkuh website is interesting in general:
  http://superkuh.com/rtlsdr.html

- „Playing with the Airspy R820T IF bandwidth“
  of Thierry Leconte:
  https://tleconte.github.io/R820T/r820IF.html

New features (8): new information

- „Playing with the Airspy R820T IF bandwidth“ of Thierry Leconte: https://tleconte.github.io/R820T/r820IF.html

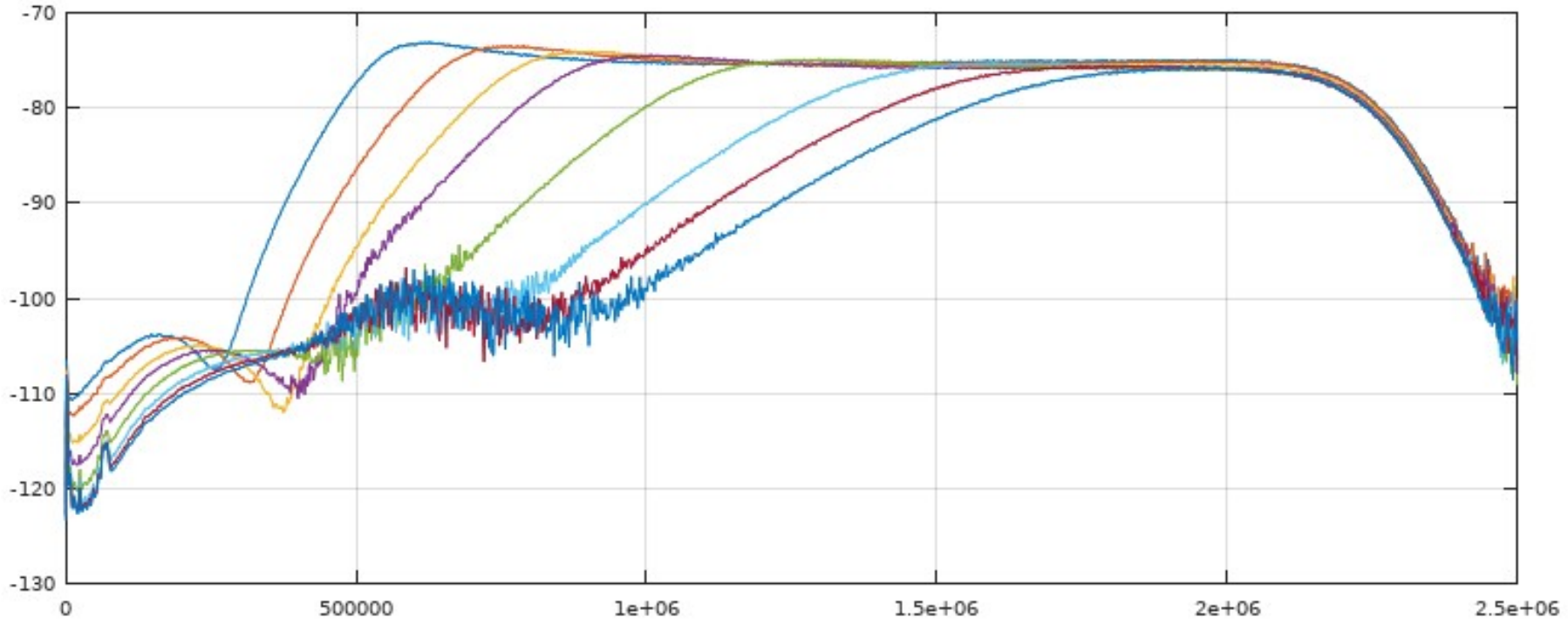

New features (9): new filters

noticing of the I2C-bit described with
”Filter extension under weak signal” (Manuel Lausch)

~ 600 kHz 3-dB bandwidth:

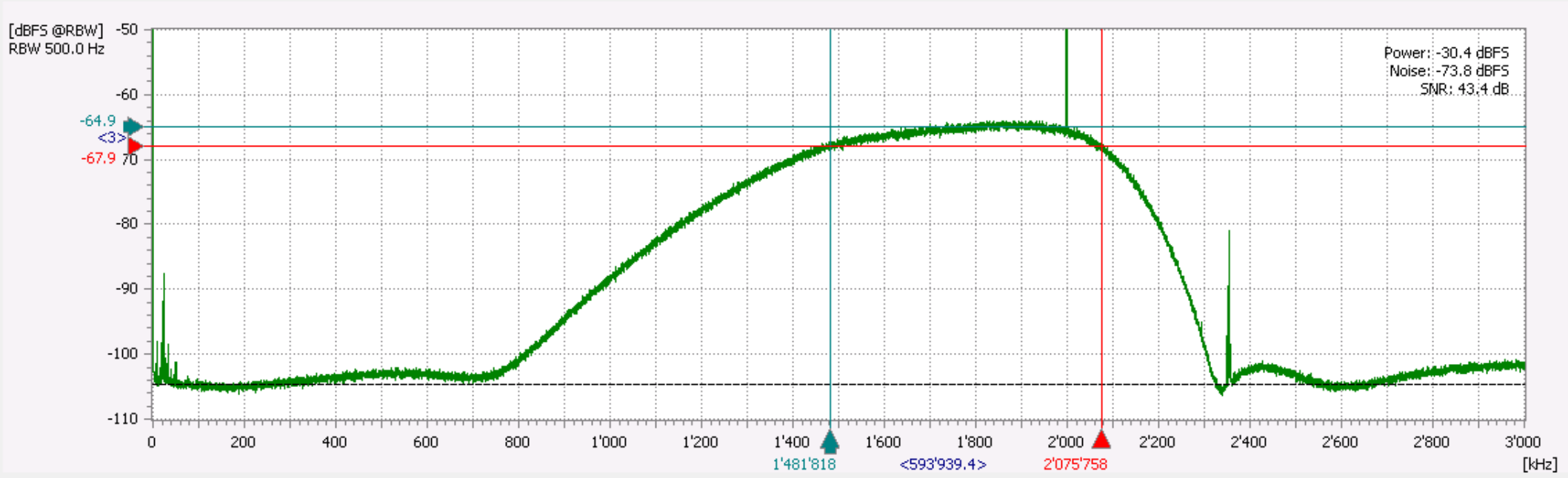

New features (10): new filters

noticing of the I2C-bit described with
”Filter extension under weak signal” (Manuel Lausch)

~ 300 kHz 3-dB bandwidth:

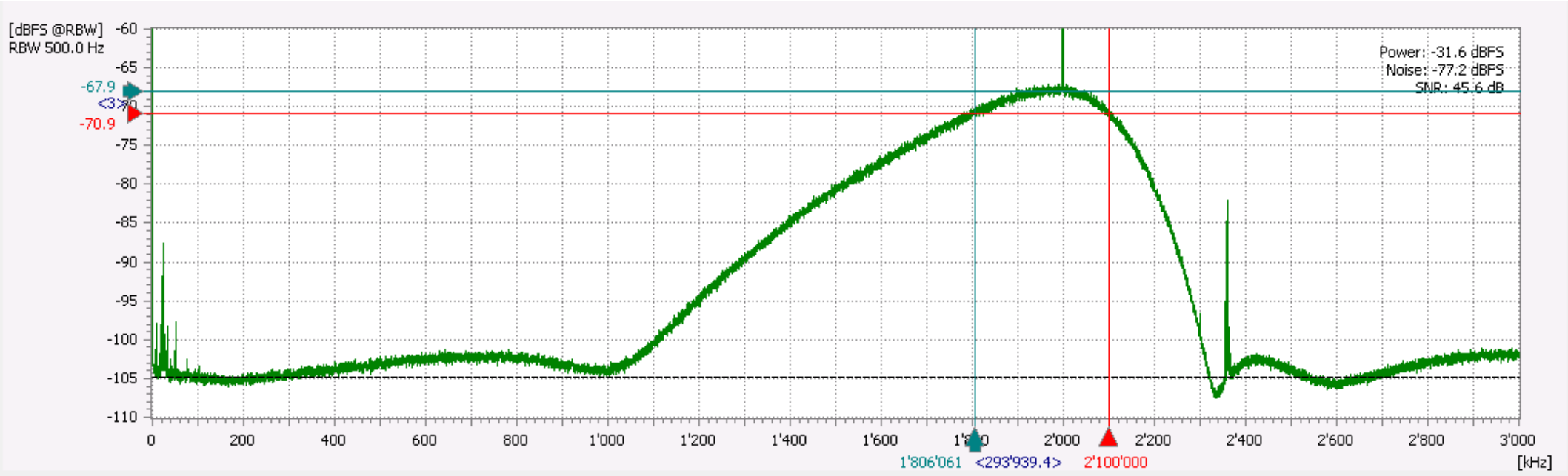

New features (11): new filters

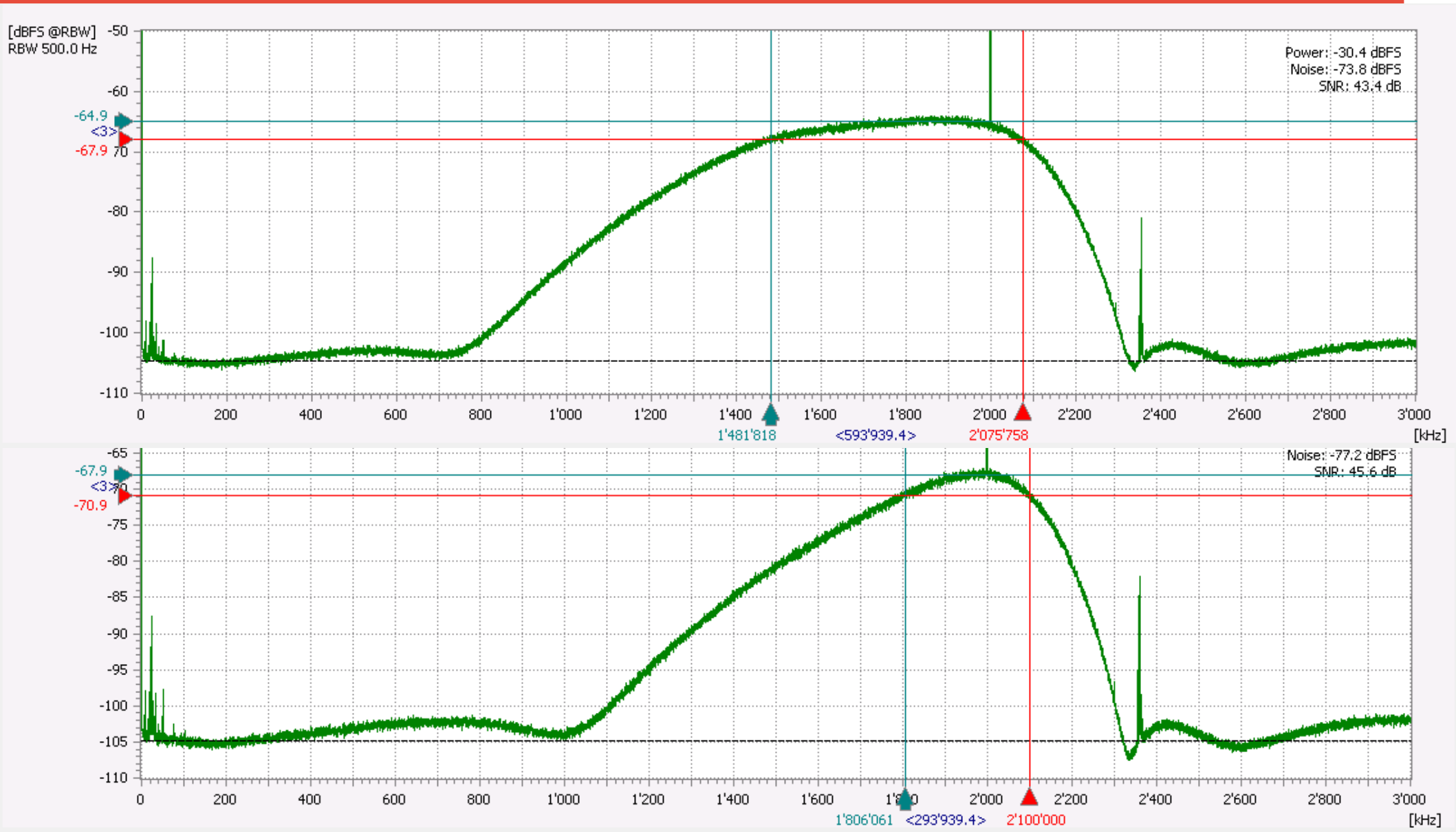

New features (12): new filters

noticing of the I2C-bit described with
”Filter extension under weak signal”
WTF is this good for?! Default initialization produced problems

~ 3200 kHz 3-dB bandwidth:

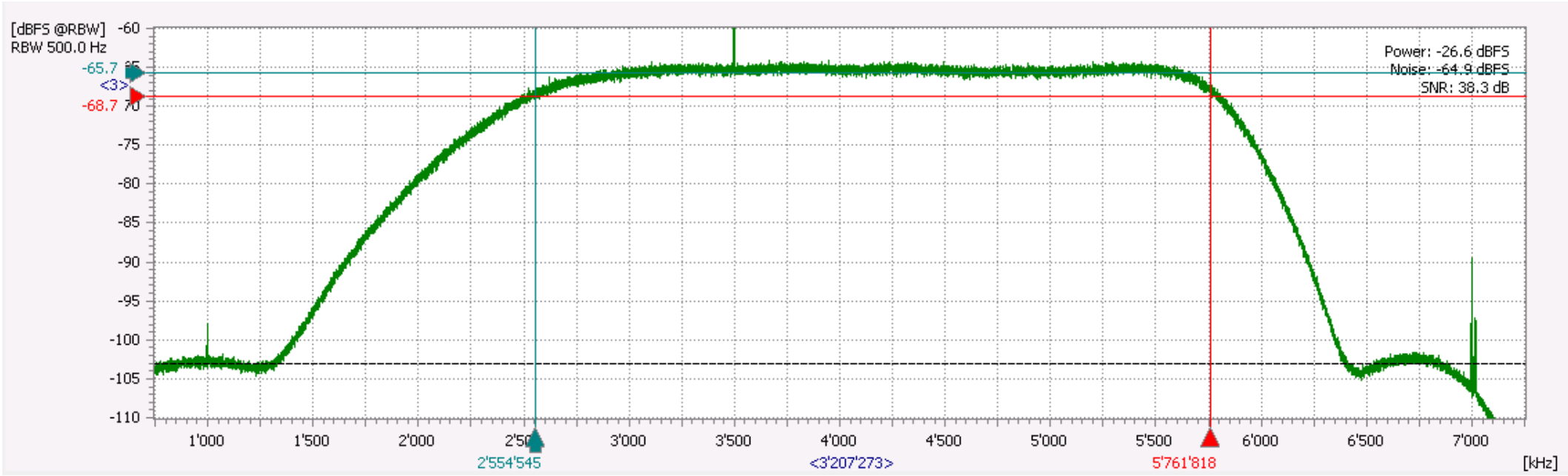

New features (13): new information

- flip the spectrum in R820T – tuner
  possible with one I2C-bit, discovered by Bernhard, DB9PP

  + flip back in RTL2832 (for always getting correct frequencies)

  → allows selection of sideband,
  on which steeper lowpass filter is to be applied

- new idea: setting / shift
  center of IF-filter

New features (14): sideband selection
→ better attenuation for 2 FM stations (left of DC)

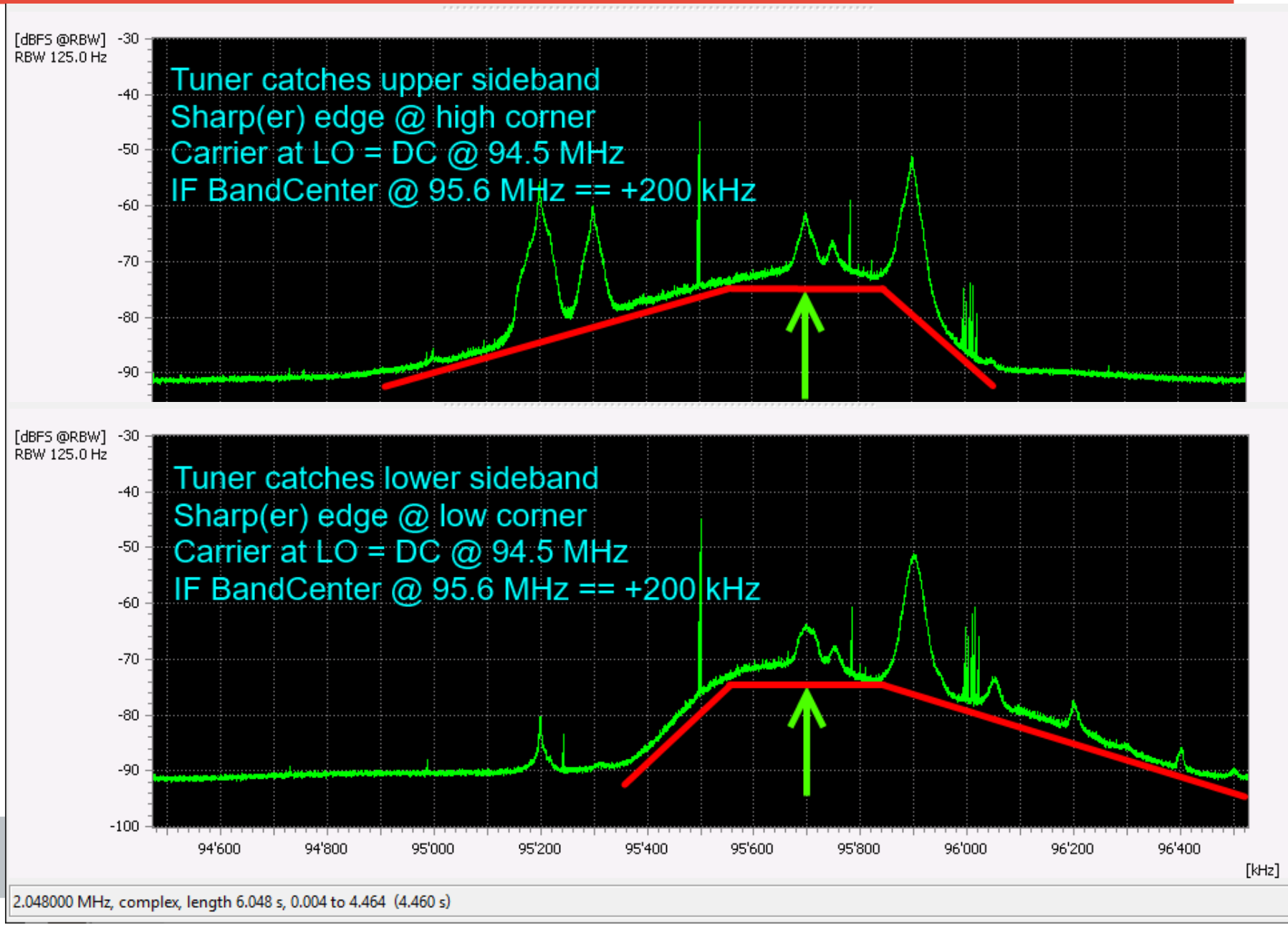

New features (15): new gain control

Bernhard + Oldenburger:

- explicit utilization of VGA control – after IF-filter (previously set on a fixed setting/value)
- control of VGA through RTL2832U → AGC together with Digital AGC in RTL2832
  → (nearly) no more oversteerings

Practical experience with the FMLIST-Scanner

- reception of DAB channel, having strong neighbor channel, now possible – enabled through more bandwidth options and sideband selection, leading to better selectivity

- (most) alias signals (in FM band) vanished, by utilizing all AGCs (LNA, Mixer, VGA and Digital AGC)

- more FM stations produce RDS decoding results (redsea), probably a combination of selectivity and better AGC behavior

Outlook for future development

- more robust AGC control?
- measure input level in dBm or dbµV
  at least support measurement despite active (LNA/Mixer) AGC