BANDIDO

390 Java Dr., Sunnyvale, CA 94086 TEL (408) 734-9410
TELEX 357-499

BANDIDO

Operator's Manual

January 1980

Copyright (c) EXIDY, INC.

TABLE OF CONTENTS

LIST OF FIGURES AND TABLES.....iii

I. INTRODUCTION

A. Game Operation.....1
B. Inspection.....1
C. Installation.....2
D. Preliminary Checkout Procedure.....3
E. Interlock Switch.....3
F. Operator Option Switch.....4
G. Operator Audio Control.....5
H. Power Supply Adjustments.....6
I. Joy stick Adjustment.....7

II. GAME OPERATION

A. Attract Mode.....8
B. Ready-to-Play Mode.....8
C. Play Mode.....10

III. THEORY OF OPERATION

A. CPU Board.....12
B. I/Ø Board.....12
C. Audio Board.....12
D. Video Monitor.....13

APPENDIX A: Selected Parts List.....14
APPENDIX B: Schematics.....15

FIGURES AND TABLES

FIGURE 1, 8-Position DIP Switch.....4

FIGURE 2, Audio PCB Adjustments.....5

FIGURE 3, Power Supply Assembly.....6

FIGURE 4, The Joystick Unit.....7

FIGURE 5, Video Screen In The Ready To Play Mode.....9

FIGURE 6, The Player Control Panel.....10

Table 1, Operator Option Switch.....4

I. INTRODUCTION

A. Game Description

BANDIDO is a one or a two player game with a self-explanatory control panel located directly in front of and below the video monitor display screen. Two push start buttons offer players the choice of a one or two player game. The player has control over a moveable figure on the screen by means of a joystick. The joystick controls the movement of a "Hero" figure around an inner field. The player also controls a knob which, when turned, causes the "Hero" to rotate in a 360 degree circle, to aim at bandits as they rotate around the outer field in clockwise and counterclockwise directions. When this knob is pushed down by the player a "bullet" is fired from the "Hero's" gun.

The player stands in front of the game looking down into the video monitor display screen which is tilted slightly up at the rear side.

A yellow "dotted" field and small rectangular barriers located on the sides of the field add to the difficulty of the game. Barriers and dots must be bypassed or eliminated to open up spaces through which bullets can pass. The Hero remains in the inner field at all times, but the bandits are able to move in and around the inner field, and as play progresses they become more aggressive and evasive.

The game consists of several pre-determined "turns"; a turn being over when the Hero is shot or touched by a bandit. Each time the Hero is eliminated, he disappears briefly from the screen and then returns, and any bandits not alredy eliminated are also returned. The game is over when the pre-programmed number of turns have been completed.

After inserting the necessary amount of money, credits are displayed on the screen and when one of the two start buttons are pushed the play begins. The number of times the Hero can be shot is selected by switches on the I/O Board. BANDIDO also has a coin accumulator so that a number of games can be purchased in advance.

B. Inspection

All Exidy equipment is carefully packaged in well padded cardboard containers to prevent damage during shipment. If a component is noticeably damaged, notify the Exidy Customer Service department immediately for information concerning the disposition of the damaged component. DO NOT apply power to the game.

To insure that the equipment has suffered no damage in shipment, inspect the container prior to acceptance from the carrier. If no immediate cabinet damage is evident perform the following visual inspection.

1. Remove the rear access door with the appropriate packaged key.

2. Examine each major and electrical component thoroughly for scrapes, dents, broken or missing parts and loose or missing screws.

3. Check for loose cable connectors.

4. Visually verify that all the integrated circuit devices (IC's) plugged into sockets are properly seated and that no IC pins are bent or misaligned.

5. Replace and lock the rear access door.

Should any damage be discovered during the foregoing inspection, a claim should be filed with the carrier. A complete report of the damage should be forwarded to Exidy.

C. Installation

Planning the location of the game should involve both physical and electrical consideration. Physical considerations concern the placement of the equipment with respect to clearances, AC cable and environmental conditions such as ventilation, temperature, weight support and accessibility, (although your game has the durability to endure nearly every type of physical hazard). Electrical considerations include availability of the correct voltage and frequency.

In planning this installation, consideration must also be given to working space required for persons involved with operation or maintenance of this system.

. NOTE: The cabinet must be within five feet of an AC outlet. Be certain that a ground jack or terminal is available at the outlet.

CAUTION: DO NOT remove the AC ground prong from the plug.

D. Preliminary Checkout Procedure

The BANDIDO game, after it is properly installed, should be checked operationally by performing the following procedures:

1. Be sure the rear access door is closed and locked.

2. Plug the AC jack into the AC outlet.

3. Allow 1 to 2 minutes for CRT warm up.

4. Observe the TV monitor display to assure the correct Attract mode is present on the screen (the Attract Mode is explained in detail in the Game Operation section of this manual).

5. If the BANDIDO Attract mode display is incorrect, contact the Exidy Customer Service Department.

6. Insert the proper coin into the Coin Mechanism slot. The Attract mode should disappear and a fanfare should be heard. The screen should then flash to the Ready-To-Play Mode described in the Game Operation section.

7. Push the start button, and verify that the visual screen images are as described in the Play Mode section of this manual. Play the game, being sure that the joystick and the Aim-Fire button are functional as described.

8. Volume control has been provided for and is described in the Operator Audio Control section.

If problems become apparent during this checkout, contact the Exidy Customer Service Department.

E. Interlock Switch

The interlock switch has been provided for BANDIDO by EXIDY to provide an effective safeguard for the maintenance technician, while working inside the cabinet. The interlock switch automatically shuts off power when the rear access door is opened. The interlock switch may be pulled out to restore power to the game for test purposes. Power is automaticaly restored to the game when the rear access door is shut.

F. Operator Option Switch

The operator option switch controls the number of times the Hero can be shot before the game is over. The 8-position DIP switch is located on the I/O board. Table 1 shows the operator option switch settings.

Switch #8 must be in the "ON" position at all times in the upright version of the game. EXIDY does not produce a coffee table version at this time, although this may happen at a future date.

TABLE 1, Operator Option Switch

SWITCHES		NUMBER OF TIMES PLAYER CAN BE SHOT
1	2	
OFF	OFF	3
ON	OFF	4
OFF	ON	5
ON	ON	6

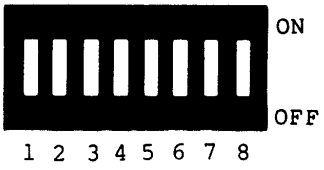

FIGURE 1, 8-Position DIP Switch

G. Operator Audio Control

There are three audio adjustment pots on the audio boards. R16 controls the music input volume to the amplifier, and R18 controls the sound input volume to the amplifier. R25 controls the amplifier volume of the combined signals and is the main volume control. Refer to the Theory of Operation section for technical details regarding the Audio Board circuitry. Figure 2 shows the Audio PCB Adjustments.

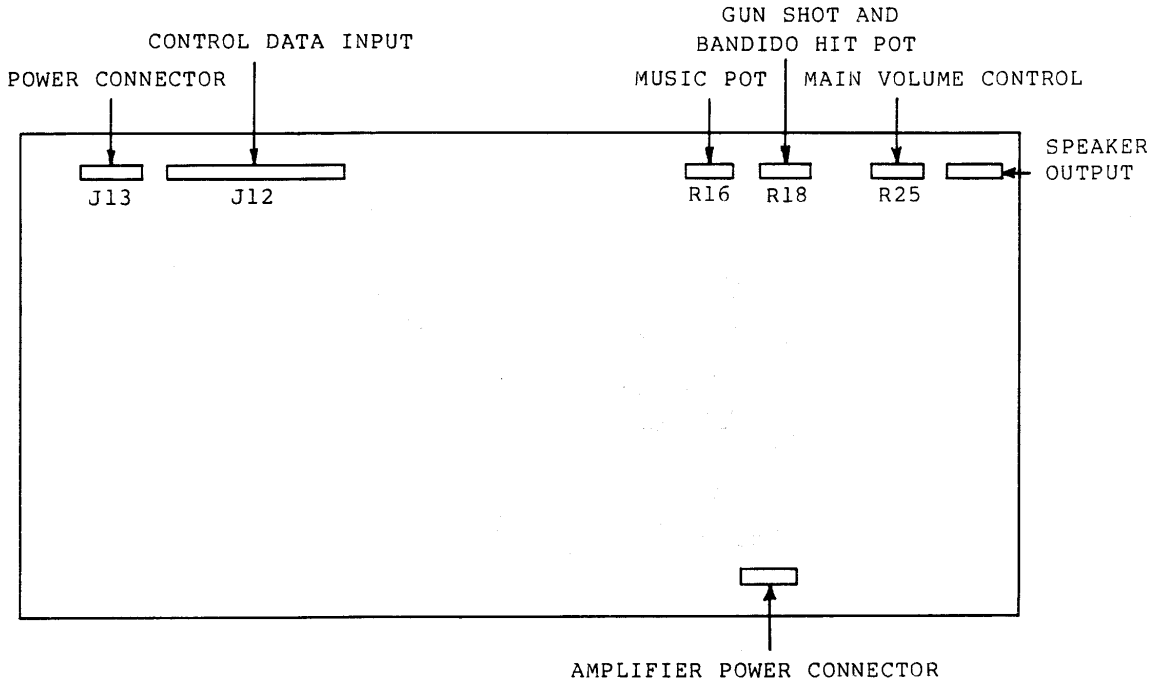

FIGURE 2, Audio PCB Adjustments

H. Power Supply Adjustments

1. Connect a voltmeter to the +5 and ground traces on the logic board.

2. Adjust the power supply potentiometer for +5.0 $\pm$ .1 VDC, Figure 3.

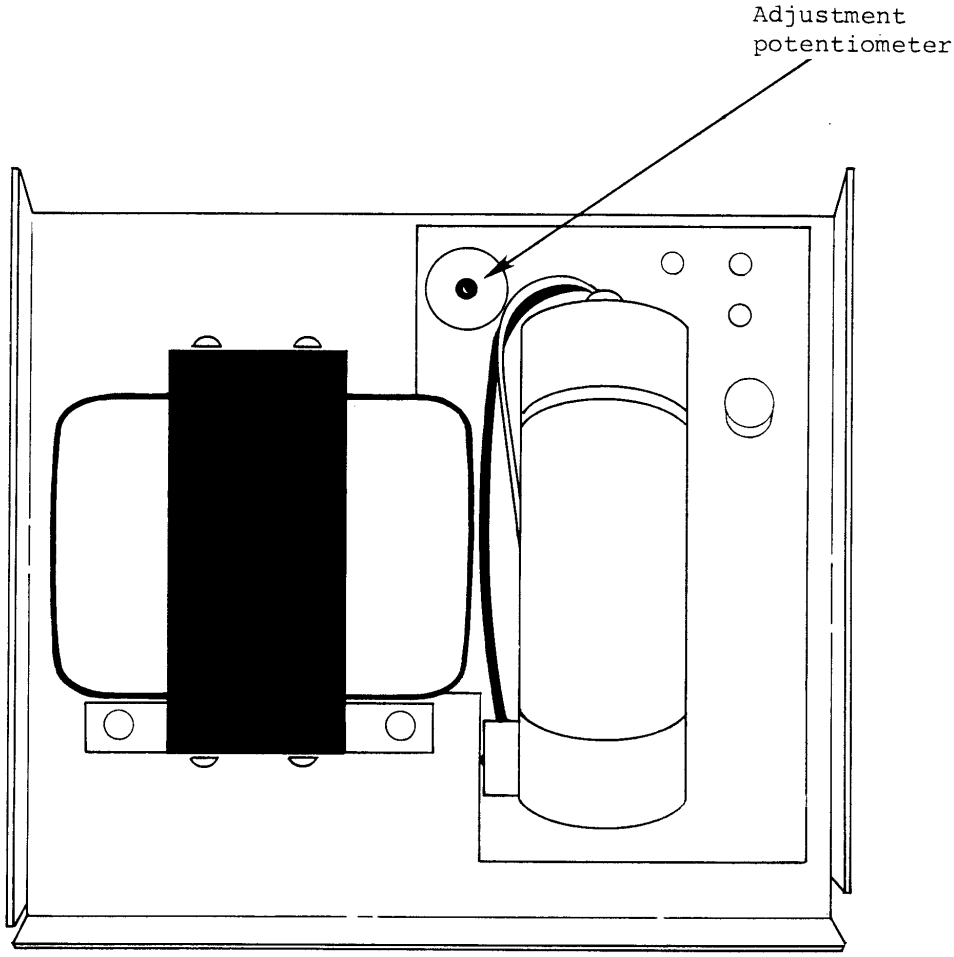

Figure 3. Power Supply Adjustment

I. Joystick Adjustments

The four-way joy stick has been modified and can be removed from the control panel as a complete unit. It is attached to the mounting with four screws and bolts. Four leaf switches on the bottom plate (activated by the control stick) signal the directional changes of the game "Hero" to the logic board.

The joy stick requires no disassembly. It can be ordered by consulting the parts list in Appendix A of this manual. To replace it remove the player control panel by removing the three screws which hold the panel to the front of the game. Remove the four screws and bolts located in the corners of the joy stick plate. Remove the joystick and replace it with the new unit. (Figure 4 shows the joystick unit and the location of the mounting screws.)

The control button is a complicated assembly. Refer to the parts list, and the Exidy Customer Service Department for servicing.

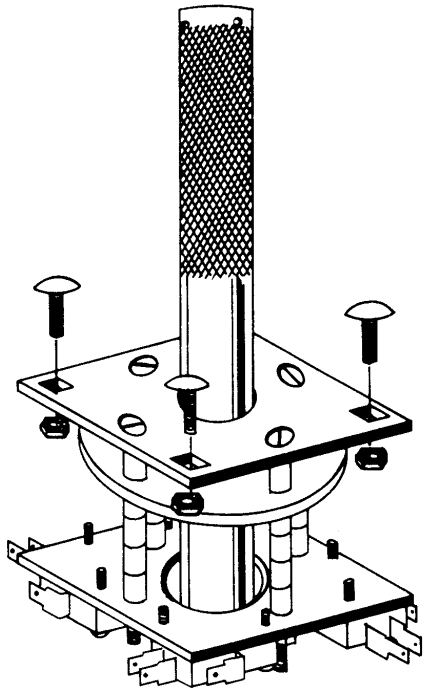

Figure 4, The Joystick Unit

II. MODES OF OPERATION

The BANDIDO game simulates with video and audio effects an Old West gun battle between the Hero (the player) and sixteen "bandidos" or bandits.

The following paragraphs explain the game modes. The modes should be checked after either set-up or repair to ensure that the game is operating effectively.

A. Attract Mode

The TV Monitor screen alternates between two distinctively different visual presentations during the Attract mode. The screen first displays the words "INSERT COIN" in the middle center. Directly underneath these words the following appears:

1 player 1 coin
2 players 2 coins

At the bottom center of the screen the Exidy copyright appears as shown: (c) EXIDY.

An old-fashioned girl appears running across the top of screen from right to left pursued closely by a cartoon character bandido holding a gun in his hand. Above the girl's head appears the word HELP! At the bottom of the screen the Hero slowly rides a horse across from left to right. The Hero and his horse stop at the right side of the screen and the girl and her pursuer once again appear at top right. Just as she calls HELP! a second time the screen changes to the second part of the Attract mode.

The second part consists of the game playing automatically. Sixteen bandits rotate in a counter-clockwise direction around the outside of the playing field. The Hero, now on foot, moves swiftly about the inner screen, turning in all directions and shooting at the bandits. The bandits also shoot at him. Bullets can be seen moving across the screen. The Hero's bullets will "kill" or eliminate bandits from the screen. When the Hero is hit by a bandit's bullet he falls to the ground, apparently mortally wounded. During actual play the fallen Hero will then disappear from the screen and again reappear standing. During the Attract mode when the Hero is hit, the display returns to the first described action. These two parts of the Attract mode continue to alternate until a coin is inserted triggering the Ready-To-Play mode.

B. Ready-to-Play Mode.

When a coin activates the coin switch an audio fanfare is heard. In the middle of the screen the following words appear:

PUSH
1 or 2 players
BUTTON

In the far upper left hand corner a number appears indicating how many times the Hero may be shot before the game ends. (This is an option - refer to the Operator Option section for information.) Next to this number is a (1) indicating the four-digit Player 1 score. In the upper middle of the screen the word HI-SCORE is displayed with a four digit number underneath. The highscore will be displayed continually during the day, and is reset to zero each time the game is deactivated. At the top upper right the word CREDIT Ø appears. The zero will change to keep track of the number of credits for which a player has paid, returning to zero when the credits are used up. Directly below the Credit number, the Player 2 score appears. At the center bottom of the screen a zero is displayed in a box, indicating how many times the hero (player) has eliminated all the bandits from the screen during play. (Figure 5 illustrates the Ready-to-Play Mode Screen as it should appear when operating correctly.)

A series of yellow dots surrounds the mid-screen words, forming a square pattern. Four small rectangles are seen on the four sides of the square.

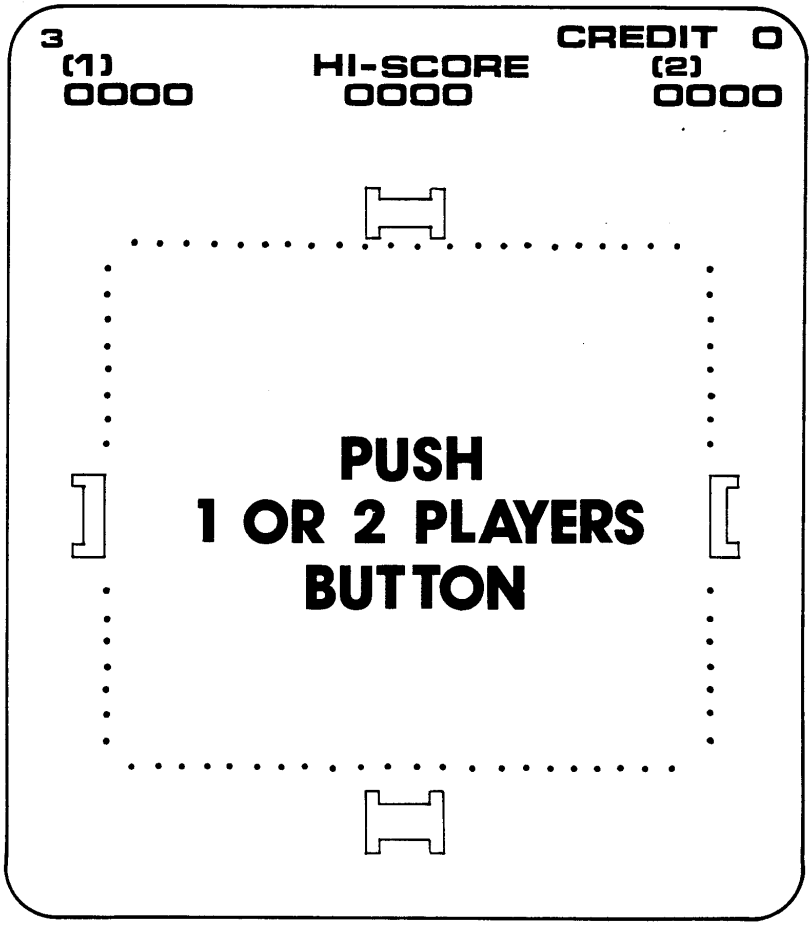

FIGURE 5, Video Screen In The Ready-To-Play Mode

C. Play Mode

The Player Control Panel located just beneath the TV Monitor Screen is equipped as follows:

On the left is a joystick, which allows the player to direct the movement of the Hero about the screen. The word "MOVE" is printed directly above the joystick. In the center of the panel are the two red "Start" push-buttons; for a one player game the button labeled "1 Player", would be pressed and the "2 Player" button would be pressed for a two player game to begin play. The "fire" button is located on the right side of the panel and labeled "AIM". This button can be rotated, controlling the direction the Hero turns to left or right, and when pushed down, "fires" a bullet from the Hero's gun. (Figure 6 illustrates the Player Control Panel.)

Play begins when a "Start" button is pushed. The screen flashes the words "GET READY" and three seconds later sixteen bandits appear on the screen rotating counter-clockwise outside the yellow square. The bandits begin firing bullets randomly at the hero who appears, gun ready, on the inside of the yellow square. After a short period of play bandits begin to move into the inner square towards the Hero, entering the field from the four corners. This phase is indicated by four arrows which appear pointing inward diagonally from the four corners of the square. Bandits will then move into the middle square periodically during the process of the game, always from the four corners. Bandits who have entered the middle square move in all directions, and can change directions swiftly. The erractic motion makes them more difficult to hit.

FIGURE 6, The Player Control Panel

The four small rectangles located on the four sides of the dot square act as barriers. These barriers can be shot through but it takes several shots to do so. Each time a bullet hits a barrier it "eats" partway through the barrier. The barriers protect both the bandits and the Hero. The yellow dots also act as barriers. Bullets must be shot through the spaces between the dots. If, however, a dot is hit by a bullet, the dot will disappear. Thus as play progresses hitting a target becomes easier, as barriers and dots disappear. It also becomes easier, however, for the Hero to be hit by the bandits.

When a bandit is hit by one of the Hero's bullets it disappears from the screen. The object is for the Hero to "kill" all the bandits before they hit him the required number of times as displayed in the upper left-hand corner. The Hero will be "hit" if either a bullet touches any portion of him, or if a bandit touches him in the center field. Each time the Hero is hit, play momentarily stops as the Hero falls to the ground. He then disappears and reappears until he has been hit the predetermined number of times.

Several times during play a "vulture" bird flys across the very top of the screen play field. As he is shielded by the dots and the barrier he is difficult to hit. When hit, a "bonus" score is displayed directly beneath the "Hi-Score" at the top of the screen. The game automatically assigns different bonus scores for this feature. A score from one hundred to five hundred will appear, and will be added to the player's score.

Another bonus occurs when a player successfully eliminates <u>all</u> the bandits from the screen within a predetermined number of turns. When this occurs, the screen flashes "BONUS!!!" Directly beneath, the words "Score X 2" appear and the Player score is immediately doubled. At the bottom of the screen the Hero appears from the left side and the girl from the right side. They meet in the center. When they meet, the screen above them fills up level by level with tiny hearts which form into a large heart background.

When a game is over the monitor flashes the words "GAME OVER", and returns to the Attract Mode. The scores of the current game remain until a coin resets the scores to zero. If credits have accumulated the monitor will flash instructions to push the start buttons to resume play. If no credits are available the screen flashes the "Insert Coin" request and the above described cycles begin again.

III. THEORY OF OPERATION

A. CPU Board

The processor hardward architecture is composed of the MPU, RAM and the ROM. The following is a brief description of these functional blocks.

MPU

This system is designed with an 8080 microprocessor at its center. The microprocessor performs all logical and calculating functions following the program stored in ROM.

RAM

The RAM is implemented with eight read/write memory IC's. Each memory IC is a 16384 x 1 bit dynamic MOS RAM. These serve both as the screen buffer and scratchpad for the microprocessor.

ROM

The ROM is configured as a 9K x 8 bit block of memory. It contains the MPU program as well as data.

B. I/O Board

Inputs and outputs to and from the system are channeled through the I/O Board. There is an 8-position DIP switch which allows the operator to select the number of times the player can be shot before the game is over. (Refer to the Operator Option Switch section.)

C. Audio Board

The sound generating system is composed of three main elements, the music generator, the sound generator and the audio amplifier. Control data input is supplied to the Audio Board by the I/O Board through connector J12. This data directs the microcomputer, located on the audio board, acting independently to execute one of several songs, or the sound generation of one of two sounds according to the stage of the game.

The music generator consists of a 8035 microcomputer and 1K bytes of ROM containing the program and data.

The sound generator is made up of a 76477 programmable sound generator which generates the BANDIDO gun shot and hit sounds.

R12 controls the music input volume to the amplifier, R18 controls the sound input volume to the amplifier. Both are channeled to R25 which acts as the main volume control.

D. Video Monitor

The BANDIDO game uses the Wells-Gardner video monitor. Be sure to check the make and model number of the monitor before calling Exidy Customer Service for information on parts or troubleshooting.

APPENDIX A: Selected Parts List

HARNESS GROUP

PART NO.	DESCRIPTION
71-2393-10	control interface harness
71-2394-10	credit harness
71-2395-10	audio power harness
71-2396-10	control harness
71-2398-10	power dispersal harness
71-2399-10	video harness
71-2401-10	speaker harness
71-2402-10	power harness
71-2403-10	audio control harness
71-2404-10	i/o control cable (2 per game)
71-2405-10	speaker pigtail harness
71-2406-10	ac lamp harness
38-5034-10	ac cord
71-2390-10	coin harness
71-2389-10	universal power supply harness

BANDIDO SHIPPING ASSEMBLY

PART NO.	DESCRIPTION
38-5075-10	BANDIDO final assembly
	shipping carton
87-9004	shipping tape
87-9000	carton strapping
87-9001	carton buckle
87-9002	carton staples
87-1086	tilt and tell
	BANDIDO operators manual

BANDIDO FINAL ASSEMBLY

PART NO.	DESCRIPTION
76-1063-10	BANDIDO cabinet
76-1063-20	backdoor control assembly
38-5076-10	monitor assembly
38-5034-10	ac line cord assembly
77-3365-15	power supply assembly
38-5057-10	coindoor assembly
62-7061	6" x 9" speaker
71-2393-10	control interface harness
71-2394-10	credit harness
71-2395-10	audio power harness
71-2396-10	control harness
71-2398-10	power dispersal harness
71-2399-10	video harness
71-2401-10	speaker harness
71-2402-10	power harness
71-2403-10	audio control harness
71-2404-10	i/o control cable (2 per game)
71-2405-10	speaker pigtail harness
71-2406-10	ac lamp harness
38-5034-10	ac cord assembly
71-2390-10	coin harness
71-2389-10	universal power supply harness
	ac lamp standard socket base
	ac lsw lamp
67-5000	lock and key assembly
	coindoor keys
	backdoor key
87-9003-10	packing list envelope
87-1062	plastic bag for manual
43-0001-10	black paper bezel
75-5158-20	sideart - left, silkscreened vinyl panel
75-5158-10	sideart - right, same as above
72-3000	interlock switch
68-7010	interlock switch bracket
75-4180-10	plastic display panel
75-5152-12	plastic back panel, silkscreened
75-4190-12	plastic logo panel, silkscreened
68-0036-12	logo panel metal bracket, painted
68-0035-12	6 x 9 speaker grill
68-6050-10	universal coinbox
68-6050-20	universal coinbox lid
68-7001	coinbox hasp
68-0009	3 amp fuse label

FINAL ASSEMBLY HARDWARE

PART NO.	DESCRIPTION
74-6507	10/24 x 2" long hex head mach screw.
74-6508-01	10/24 kep nut
74-5165	1/4 id x 1 1/4 od fender washer
74-4601	8 x 5/8 flat head self tap Phil. screw
74-6511	10/24 x 1" long button head hex socket black machine screw
74-8503	8 x 5/8 Phillips pan head self tap screw
74-6503	10/32 kep nut
74-	6/32 x 1/2 long Phillips pan head mach. screw, zinc
	8 x 1 1/2 Phillips pan head self tap screw, zinc
	#10 American plain washer
	#8 American plain washer
	10 x 1 1/2 Phillips pan head self tap screw, zinc
	10/24 x 1 1/4 black carriage bolt

MONITOR ASSEMBLY

PART NO.	DESCRIPTION
79-2304	19" b & w monitor
76-1063	monitor mounting bracket
74-	10/24 x 1 1/2 long hex head zinc mach. screw
74-6506-01	10/24 kep nut
74-5165	1/4 id x 1 1/4 od fender
74-6402	10 American plain flat washer
75-5159-10	monitor color overlay, formed

UNIVERSAL ALL-POSITION JOYSTICK CONTROL ASSEMBLY

PART NO.	DESCRIPTION
68-0030-10	upper mtg plate
92-1013-10	control handle
68-2031-10	lower disc
68-2030-10	switch plate
72-3023	microswitch
73-9081	Belleville spring washer
74-5189	#4-40 x 1/2 lg. Phillips pan head mach. screw
74-6525	#10-24 x 2 1/2 lg. flat head mach. screw, full thread, black
74-6510	#10-3/8 lg. spacer
74-5212	#10-1 1/2 lg spacer
When above item not available replace with:	
74-6510	#10-3/8 spacer
74-5211	#10 x 12 spacer &
74-6402	#10 flat washer
74-6506	#10-24 kep nut, small pattern
74-6402	#10 flat washer

PCB MOUNTING ASSEMBLY

PART NO.	DESCRIPTION
68-0073-12	BANDIDO PCB mounting bracket
74-5196	6132 x 1/2" Phillips pan head mach. screw, zinc
74-8503	8 x 5/8 Phillips pan head selftap screw, zinc
77-3366-15	BANDIDO CPU PCB assembly
77-3367-15	BANDIDO I/O PCB assembly
77-3368-15	BANDIDO audio PCB assembly

UNIVERSAL MAKE-FROM COIN DOOR ASSEMBLY

66-4003	Vendall standard double coin door
66-4004	Vendall large (British/Australian) double coin door
60-4007	twenty-five cents American Vendall coin acceptor
66-4008	one hundred yen Japenese Vendall coin acceptor
66-4009	one d. mark German Vendall coin acceptor
66-4011	five franc Belgian Vendall coin acceptor
66-4012	twenty-five cents Canadian Vendall coin acceptor
66-4005	ten pence British Vendall coin acceptor
66-4006	twenty cents Australian Vendall coin acceptor

BANDIDO FIRE AND MOTION ASSEMBLY

PART NO.	DESCRIPTION
68-0053-10	housing bracket
68-0054-10	shaft, cam
68-0055-10	arm, cam
68-0056-10	bracket, switch
68-0070-10	gear, cam
68-0061-10	washer, stop
68-0069-10	mounting plate
74-5228	knob, pointer w/set screw
72-3029	micro switch, short arm
72-3028	micro switch, long arm
74-5225	retaining ring 1/4" 5133-25
74-5226	ball bearing 3/16 dia.
74-5223	compression spring #1
74-5227	compression spring #2
74-2509	#4-40 x 5/8 L. Phillips pan head
74-5191	#4-40 kepnut
74-4501	#8-32 x 1/2 L. Phillips flat head
74-4600	#8-32 kepnut
	grease
68-0059-10	spacer bearing
74-5182	screw #6-32 x 1/4 L. Phillips pan head
74-5188	#6 lock washer

Universal Power Supply PCB

PART NO.		DESCRIPTION
77-3190	1	printed circuit board
20-4000	4	4000 uf 50V axial lead cap
21-4010	2	33 uf 35V dip tantalum cap
21-4015	5	6.8 uf 35V dip tantalum cap
46-3016	2	60SI diode

Color Add-On Kit (Optional)

PART NO.	DESCRIPTION
48-2347	74LS240 IC (1H)
43-2107	74LS175 IC (3K)
48-9118	Programmed 825136 BAI-L3-1 (3L)
48-3007	7465158 IC (3D)
20-4014	33MF-16V electronic cap (C3, C4)
47-3005	3904 transistor (Q1-Q5)
52-0009	4.7K Omega sip resistor network 9 pin (RM 11)
48-9107	IC, 7426 (4D)
61-8193	7 pin male connector (J4)

Bandido CPU PCB ASSEMBLY

PART NO.	DESCRIPTION
48-9109	8080A microprocessor (2B)
48-2322	74LS153 IC (1Z, 2Z, 3Z, 3A, 4A, 4Z, 5A, 5Z)
48-2328	74LS241 IC (1A, 1C)
48-2333	74LS174 IC (1E,4F,4G)
48-2312	74LS08 IC (4B, 4C, 4E, 4H)
48-2301	74LS02 IC (3E)
48-2305	74LS74 IC (3D)
48-2300	74LS00 IC (3F)
48-2307	74LS138 IC (3G)
48-2321	74LS139 IC (3I)
48-2302	74LS04 IC (4D)
48-2341	74LS86 IC (4I)
48-2315	74LS32 IC (5B)
48-9112	4116 RAM-UPD 416 sharp 4116, TMS 4116 (5C-5J)
23-4034	.1MF ceramic cap, 16v (C1-C19, C21-C33, C35, C39, C41, C43, C45, C47, C49, C56, C57, C58),

CPU PCB ASSEMBLY (continued)

PART NO.	DESCRIPTION
23-4038	.2MF ceramic cap, 16v (C34, C36, C38, C40, C42, C44, C46, C48)
20-4001	220MF 6.3 electrolytic CAP (1G, 1J)
20-4006	100 MF-16V electrolytic cap (1G, 5J)
25-1019	120 pf mica cap (2Z, 4B)
23-4067	330 pf ceramic cap (3D)
23-4036	680 pf ceramic cap (5C)
59-5141	150 ohm 1/4 watt carbon resistor (2C)
59-5125	1 k ohm 1/4 watt carbon resistor (3B, 4G)
59-5172	33 ohm 1/4 watt carbon resistor 5C-5J
61-8172	11 pin male connector (1I)
61-8162	24 pin IC socket-soldertail (1F, 2F, 1G, 2G, 1H, 2H, 1I, 2I, 1J)
61-5163	50 pin PCB male header (board edge)
61-8035	40 pin IC socket-soldertail (2B)
48-9117-01	programmed 2708 BAC-F1-1 (F1)
48-9117-10	programmed 2708 BAC-F2-1 (F2)
48-9117-09	programmed 2708 BAC-G1-1 (G1)
48-9117-08	programmed 2708 BAC-G2-1 (G2)
48-9117-07	programmed 2708 BAC-H1-1 (H1)
48-9117-06	programmed 2708 BAC-H2-1 (H2)
48-9117-05	programmed 2708 BAC-I1-1 (I1)
48-9117-04	programmed 2708 BAC-I2-1 (I2)
48-9117-03	programmed 2708 BAC-J1-1 (J1)
61-8062	16 pin sockets soldertail (5C-5J)

Bandido Audio PCB ASSY

PART NO.	DESCRIPTION
48-2302	74LS04 IC (U6)
48-0104	7475 IC (U3, U4)
48-2076	74123 IC (U5)
48-9110	8035 microcomputer IC (UI)
48-9116	programmed 26-8 BAA-U2-1 (U2)
48-1017	76477 sound generator (U7)
20-4021	330 mf 16v electrolytic cap (C17, C18, C19, C20, C21)
20-4022	1mf 50v electolytic cap (C11)
21-4016	6.8 mf, 10v tantalum cap (C3)
20-4014	33mf 10v electrolytic cap (C4, C5)
20-4033	.01 mf ceramic cap (C14, C23, C24, C25, C26, C27, C28)
23-4060	.001 mf 50v mica cap (C7, C8)
25-1011	.047 mf 100v mica cap (C6)
21-4021	1mf 25v tantalum cap (C6)
23-4041	30 pf ceramic cap (C1, C2)
46-3027	IN3FA diode (CR1-CR6)
52-0010	1K ohm sip resistor network 8 pin 7 resistors (RP1, RP2)
72-3025	dip package shunt amp pin 435704-8 (JMP)
59-5175	36K ohm 1/4 watt carbon resistor (R14, R10)
59-5080	10K ohm 1/4 watt carbon resistor (R1, R4, R26)
59-5055	47K ohm 1/4 watt carbon resistor (R5, R17, R19, R24)
59-5075	20K ohm 1/4 watt carbon resistor (R7, R15)
59-5040	150K ohm 1/4 watt carbon resistor (R6)
59-5164	620K ohm 1/4 watt carbon resistor (R8)
59-5045	100K ohm 1/4 watt carbon resistor (R9, R31)
59-5065	33K ohm 1/4 watt carbon resistor (R2, R3, R28)
59-5030	560K ohm 1/4 watt carbon resistor (R13)
59-5023	1.5M ohm 1/4 watt carbon resistor (R11, R12)
54-5030	10K ohm pot (R16, R18, R25)
45-3041	6MHZ crystal
61-8169	6 pin male connector (J13)
61-8174	15 pin male connector (J12)
61-8167	4 pin male connector (J24, J26)
61-8035	40 pin IC socket-soldertail (U2)
48-8045	24 pin IC socket-soldertail (U2)
48-9112	LM 377 (U9)
48-2342	LM 324 IC (U8)
59-5095	4.7K ohm 1/4 watt carbon resistor (R23)
59-5025	1M ohm 1/4 watt carbon resistor (R27, R29, R30)
23-4034	.1 ceramic capacitor (C15, C16, C29, C30, C31, C32)
22-4025	.47 mf tantalum capacitor C22
68-0079-10	heatsink v7-5 with 2020 holes (U9)

Bandido I/O PCB ASSEMBLY

PART NO.	DESCRIPTION
48-2011	74S04 IC (1A)
48-2013	7406 IC (1B, 1C)
48-9100	74LS368 IC (1E, 1F, 1G)
48-2347	74LS240 IC (1J, 1I)
48-2300	74LS00 IC (4F, 2K)
48-9101	74198 IC (1L)
48-9102	74LS160 IC (2A)
48-2333	74LS174 IC (2B, 2C, 2D, SI, 3I)
48-9114	74LS151 IC (2E, 2F, 2G, 2H, 3E, 3F, 3G, 3H)
48-2107	74LS175 IC (2J, 3J)
48-2302	74LS04 IC (4H, 4B, 2L)
48-2099	74LS164 IC (3A, 4A)
48-2082	74109 IC (3B)
48-9106	74LS42 IC (3C)
48-9103	74LS156 IC (4C)
48-2305	74LS74 IC (4G)
48-2095	74161 IC (4I, 4J, 5I, 5J)
48-2341	74LS86 IC (4L, 4K, 5L, 5K)
48-9108	74361A IC (5A)
48-2315	74LS32 IC (5B)
48-2076	74123 IC (5D)
48-2340	74LS14 IC (5F)
48-2303	74LS20 IC (5G)
48-9105	74LS55 IC (5H)
20-4006	100 uf-16v electrolytic cap axial (C46)
20-4009	4.7 uf-25v electrolytic cap radial (C3-C120)
20-4012	47 mf-16v electrolytic cap axial (C13)
20-4029	10 mf-25v tantalum cap (C20-C43, C18)
22-4037	33 mf-15v tantalum cap (C17)
21-4011	3.3 mf-25v tantalum cap (c15)
23-4034	.1mf ceramic cap (C47-C71)
23-4033	.01 mf ceramic cap, 25v (C14, C16, C19)
23-4068	220 pf ceramic cap (C9)
23-4036	680 pf ceramic cap, 16v (C2)
23-4065	330 pf ceramic cap (C7)
23-4044	1000 pf ceramic cap, 25v (C5)
23-4043	180 pf ceramic cap, 25v (C1)
23-4001	220 mf electrolytic cap axial (C44, C45)
21-4015	6.8 mf tantalum ca (C56)
46-3025	IN4002 diode (CR4, CR14, CR15)
46-3029	IS2075K diode (CR1-CR3)
45-3046	20.160 mhz crystal
59-5136	330 ohm 1/4 watt carbon resistor (R1, R2, R8, R13, R18, R23)
59-5173	51 ohm 1/4 watt carbon resistor (R9, R14, R19, R24)

I/O PCB ASSEMBLY (Continued)

PART NO.	DESCRIPTION
59-5140	100 ohm 1/4 watt carbon resistor (R7, R12, R17, R22)
59-5125	1K ohm 1/4 watt carbon resistor (R32, R33, R36)
59-5174	7.5 K ohm 1/4 watt carbon resistor (R5, R10, R15, R20)
59-5132	510 ohm 1/4 watt carbon resistor (R4)
59-5177	390 ohm 1/4 watt carbon resistor (R25-R29)
59-5080	10K ohm 1/4 watt carbon resistor (R30, R31, R39)
59-5065	33K ohm 1/4 watt carbon resistor (R34, R35)
52-0009	4.7K ohm sip resistor network 9 pin (RM1, RM12)
59-5103	1K ohm sip resistor network 9 pin (RM2, RM5, RM8)
52-0007	68 ohm sip resistor network 8 pin (RM3, RM4, RM6, RM7, RM9, RM10)
72-3027	8 switches dip package (1D)
61-8171	10 pin male connector (J1)
61-8174	15 pin male connector (J2)
61-8169	6 pin male connector (J3)
59-5095	4.7K ohm 1/4 watt carbon resistor (R60, R61, R62, R38)
61-8175	17 pin male connector (J6)
61-8167	4 pin male connector (J8)
59-5110	2.2 K ohm 1/4 watt carbon resistor (R37)
61-8166	3 pin male connector (J12)
61-5163	50 pin PCB male header (J9, J10)
59-5104	2K ohm 1/4 watt carbon resistor (R6, R11, R16, R21)

APPENDIX B: Schematics

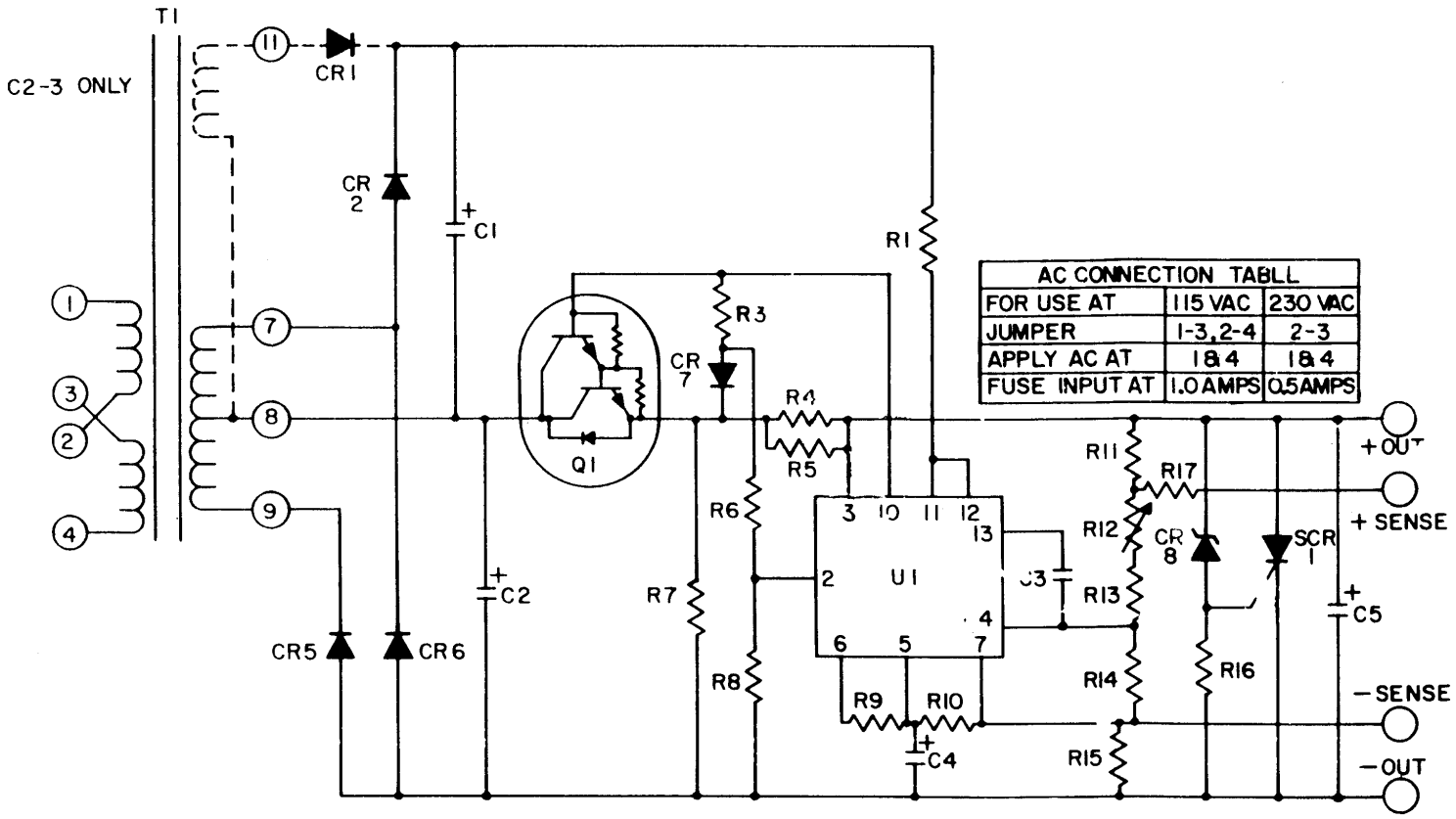

AC CONNECTION TABLL		
FOR USE AT	115 VAC	230 VAC
JUMPER	1-3, 2-4	2-3
APPLY AC AT	1 & 4	1 & 4
FUSE INPUT AT	1.0 AMPS	0.5 AMPS

PRODUCTION NOTES:

1.) SCR 1 TO BE HEATSINKED ON N5-9/OVP ONLY

AC CONNECTION TABLE		
FOR USE AT	115 VAC	230 VAC
JUMPER	1&3, 2&4	2&3
APPLY A C AT	1 & 4	1 & 4
FUSE INPUT AT	1.5 AMPS	.75 AMPS

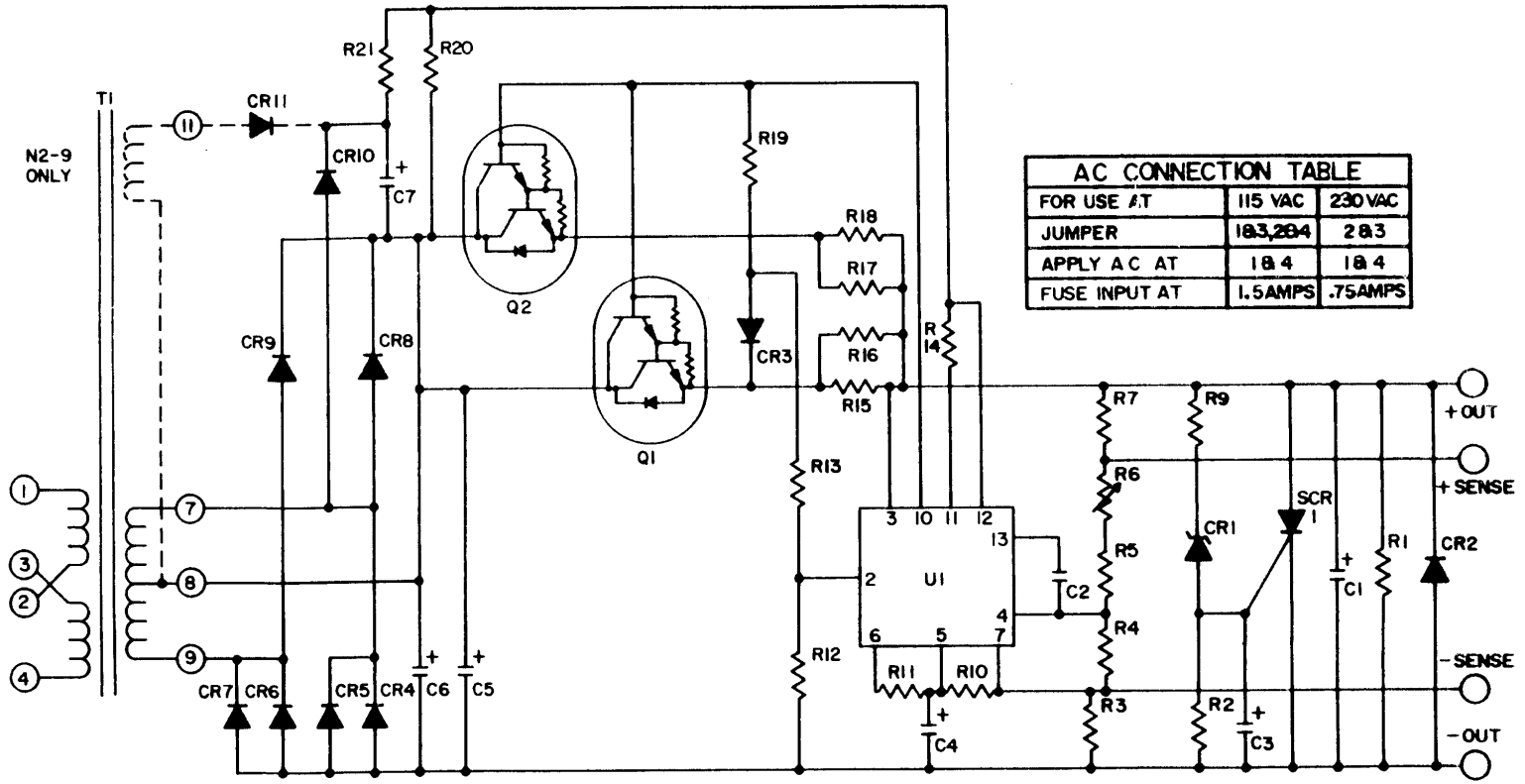

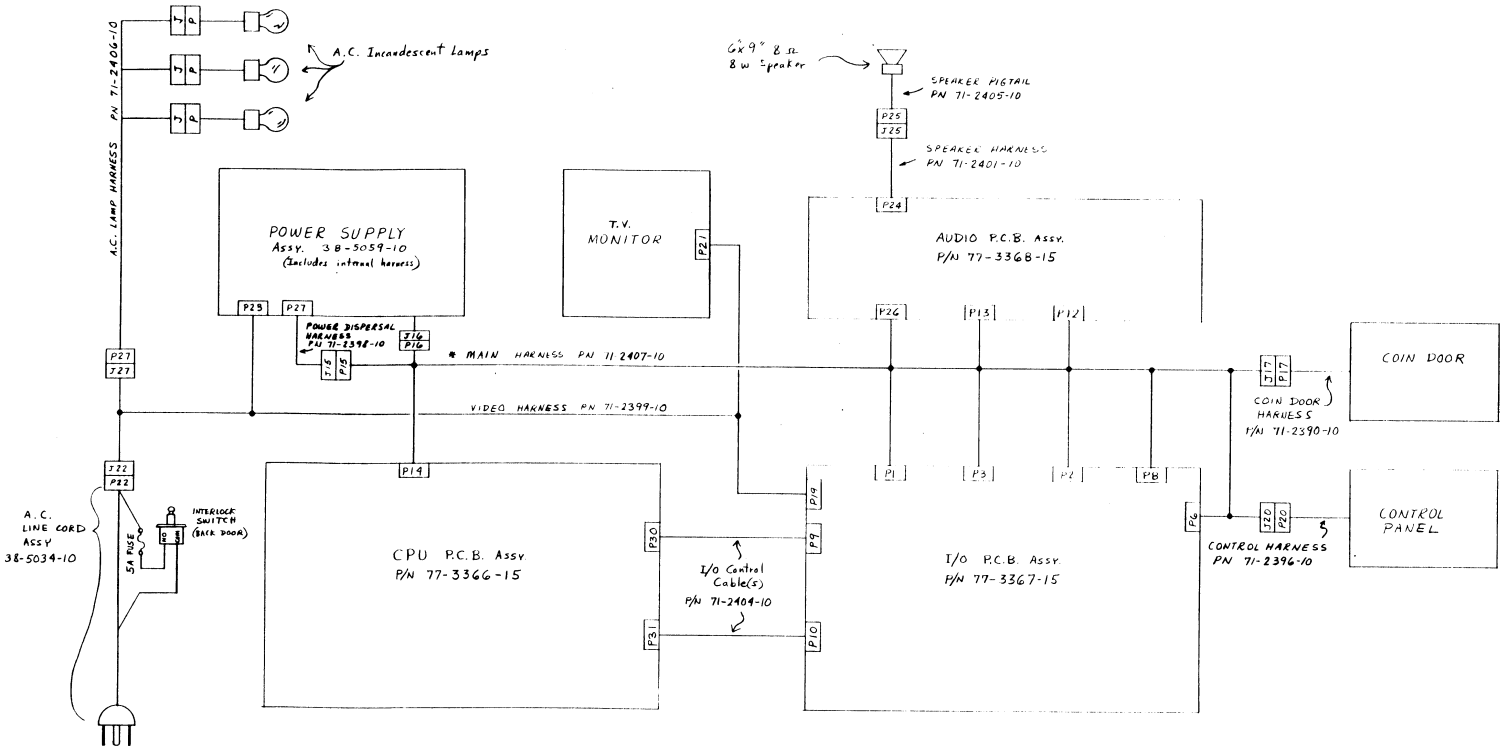

* MAIN HARNESS (PN 71-2407-10) is comprised of "sub" harnesses:

1. Control Interface Harness
2. Credit Harness
3. Audio Power Harness
4. Power Harness
5. Audio Control Harness

EXIDY INC.
BANDIDO HARNESS
COMPOSITE DIAGRAM

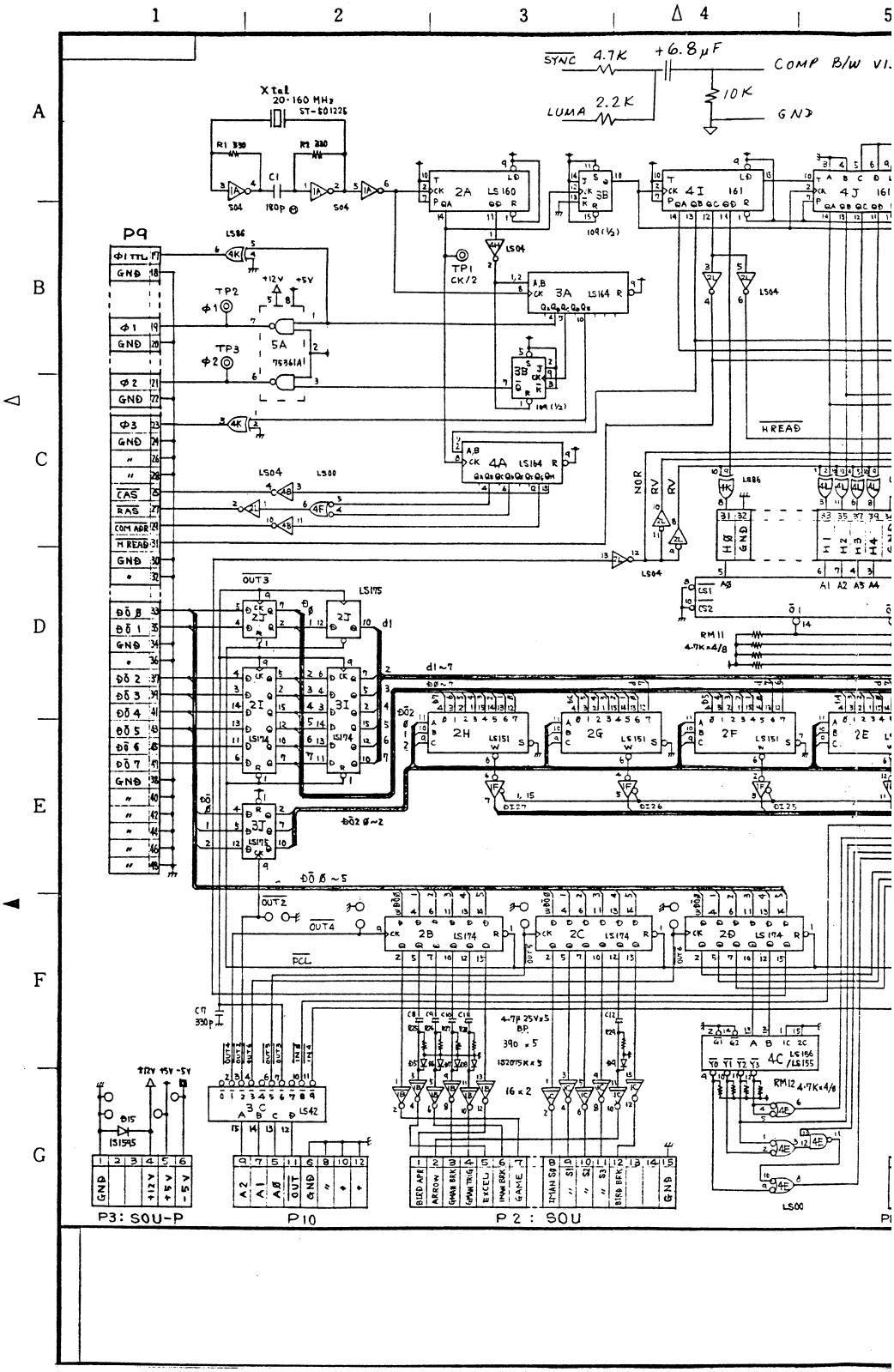

SYNC 4.7K
+6.8μF
COMP B/W VI.
LUMA 2.2K
10K
GND
Xtal 20·160 MHz ST-501225
P9
TP1 CK/2
TP2
TP3
HREAD
OUT3
OUT2
OUT4
PCL
RM11 4.7K×4/8
RM12 4.7K×4/8
P3: SOU-P
P10
P2 : SOU

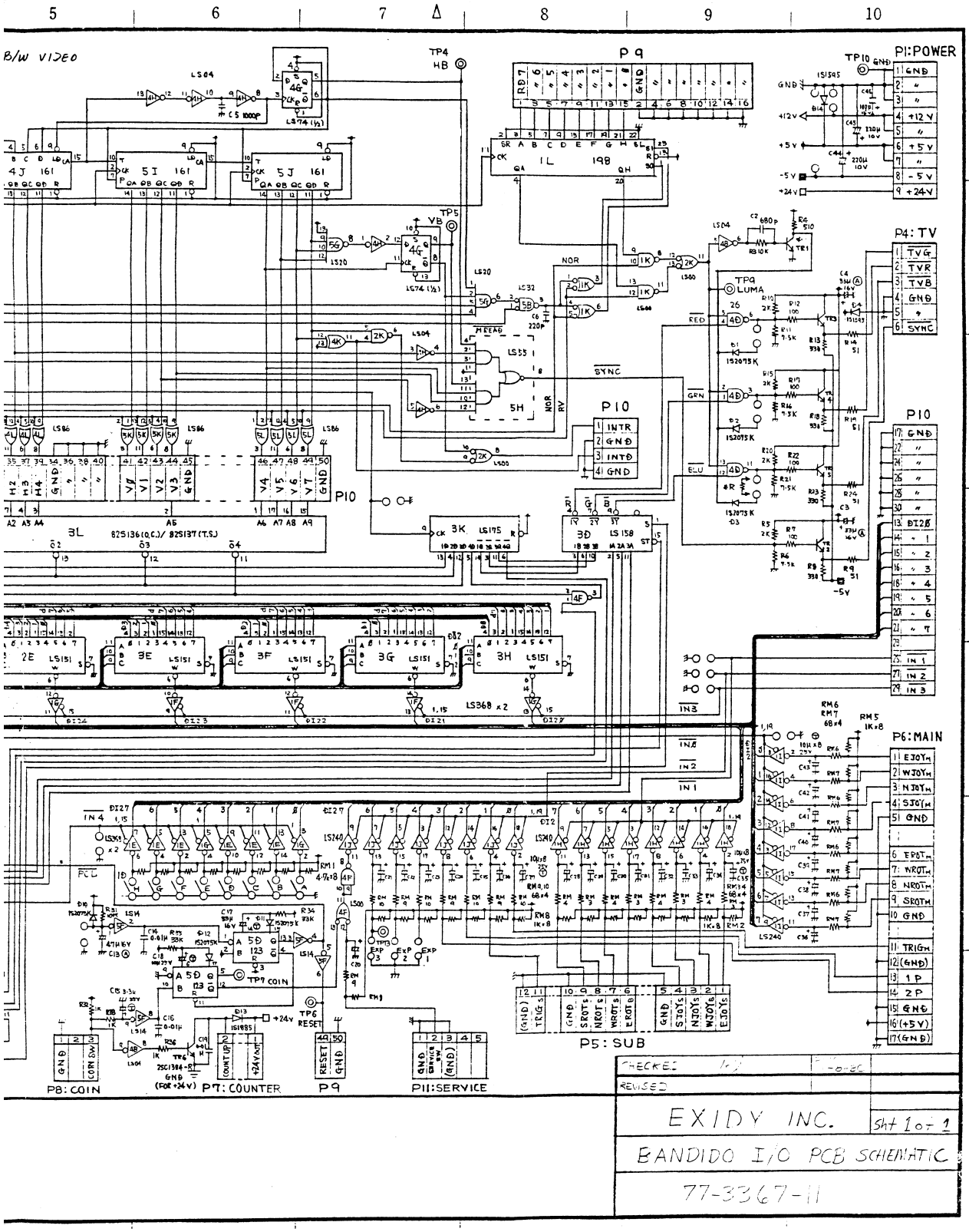
B/W VIDEO
P1:POWER
P4: TV
P5: SUB
P6: MAIN
P7: COUNTER
P8: COIN
P9
P10
P11:SERVICE
EXIDY INC.
Sht 1 of 1
BANDIDO I/O PCB SCHEMATIC
77-3367-11

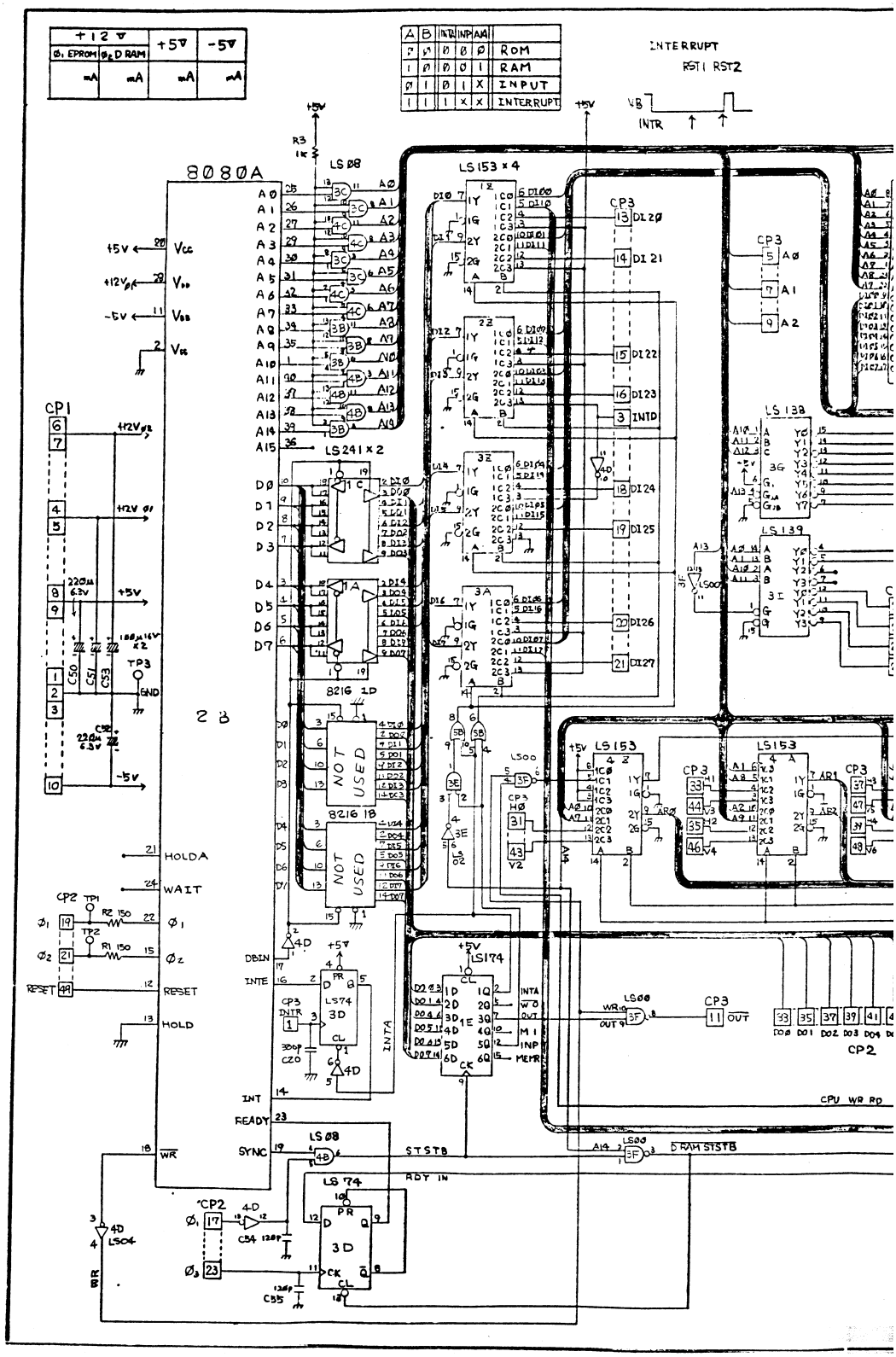

+12 V
Ø1 EPROM
Ø2 D RAM
+5V
-5V
mA
A B INTA INP A14
ROM
RAM
INPUT
INTERRUPT
INTERRUPT
RST1 RST2
VB
INTR
8080A
LS08
LS153 x 4
LS241 x 2
8216 1D
8216 1B
NOT USED
LS174
LS74
LS138
LS139
LS153
LS00
CP1
CP2
CP3
HOLDA
WAIT
RESET
HOLD
DBIN
INTE
INTA
INT
READY
SYNC
STSTB
RDY IN
CPU WR RD
D RAM STSTB

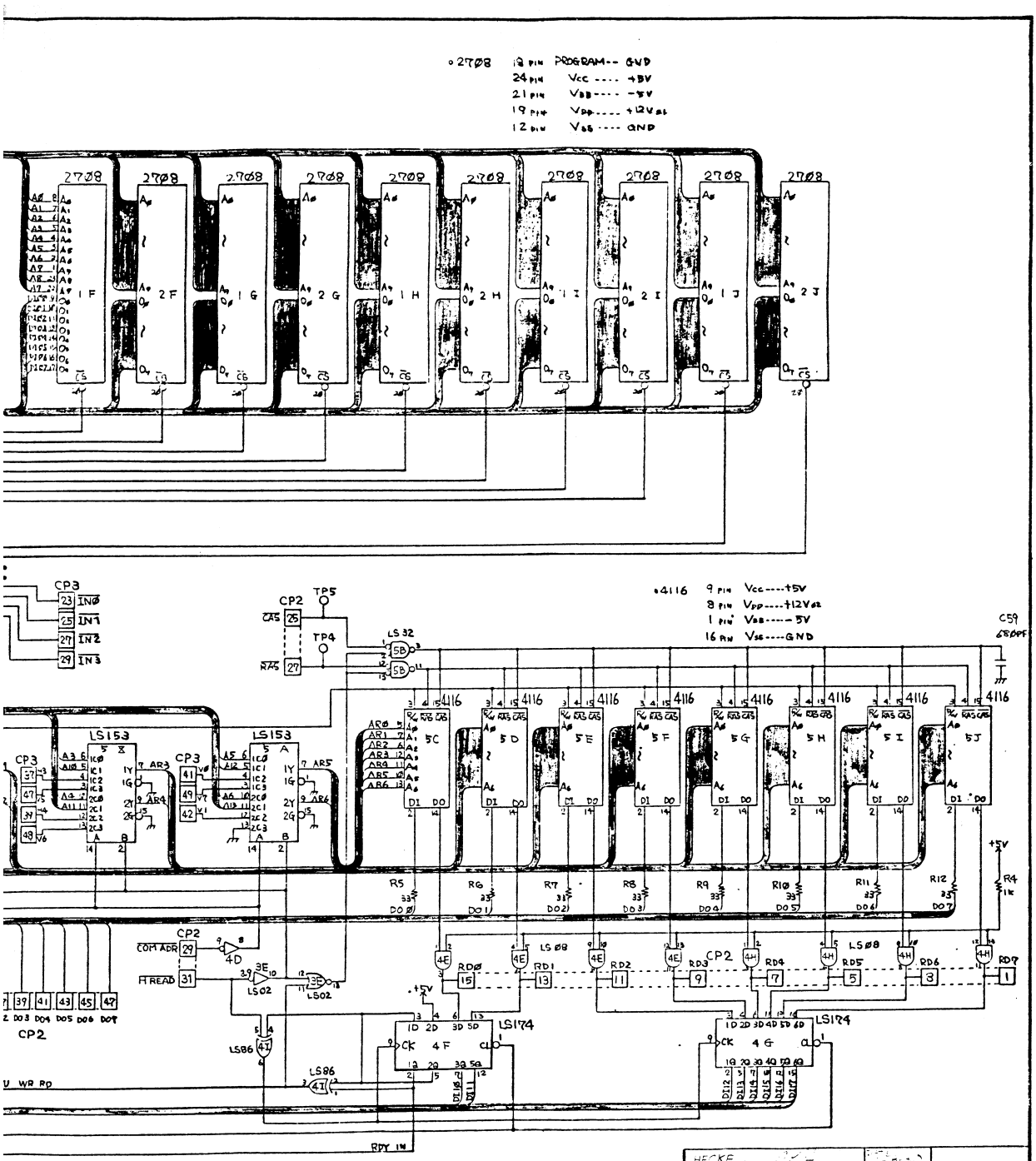

HECKEL		
REVISED		SHT 1 of 1
EXIDY INC.		
BANDIDO CPU PCB SCHEMATIC		
77-3366-11.		

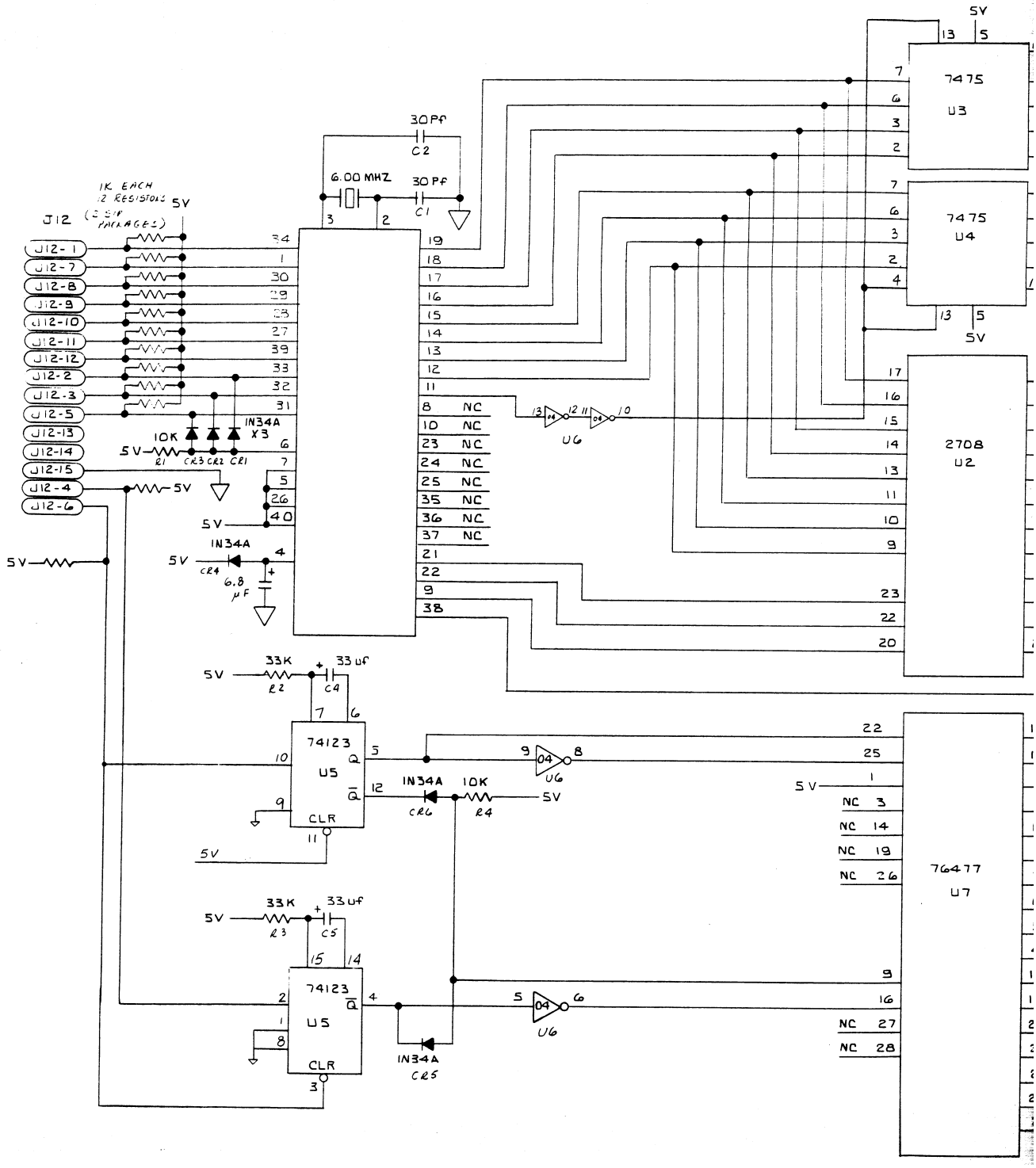
1K EACH
12 RESISTORS
(3 SIP PACKAGES)
J12
5V
J12-1
J12-7
J12-8
J12-9
J12-10
J12-11
J12-12
J12-2
J12-3
J12-5
J12-13
J12-14
J12-15
J12-4
J12-6
10K
R1
CR3 CR2 CR1
IN34A X3
6.00 MHZ
30 PF
C2
C1
IN34A
CR4
6.8 µF
33K
R2
33 uf
C4
74123
U5
CLR
IN34A
CR6
10K
R4
R3
C5
IN34A
CR5
7475
U3
7475
U4
2708
U2
U6
76477
U7
NC

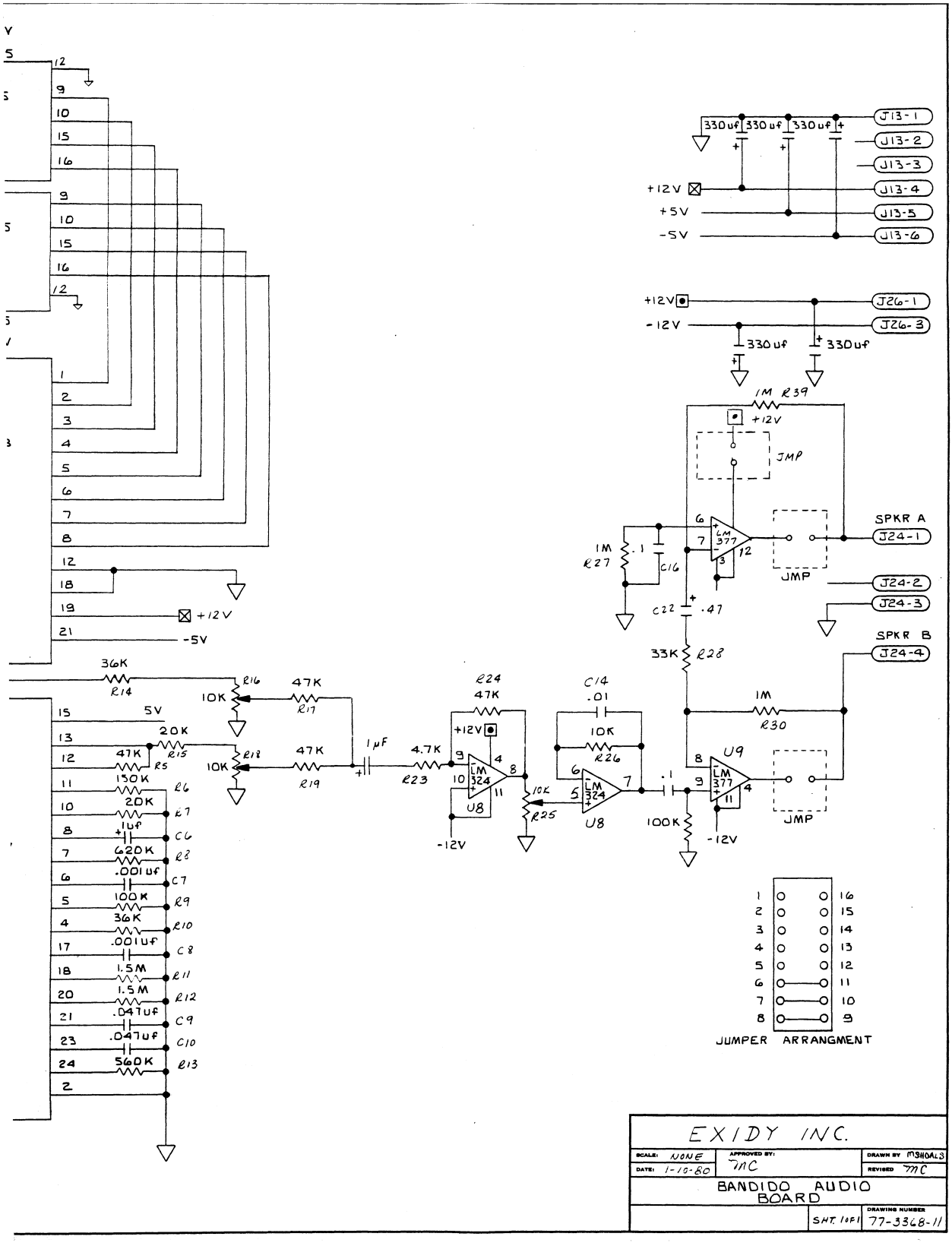

J13-1
J13-2
J13-3
J13-4
J13-5
J13-6
330uf
+12V
+5V
-5V
J26-1
J26-3
-12V
1M R39
JMP
SPKR A
J24-1
J24-2
J24-3
SPKR B
J24-4
LM 377
C16
C22
.47
33K R28
1M R30
U9
100K
36K R14
R16
10K
47K R17
5V
20K R15
47K R5
R18
47K R19
1µF
4.7K R23
R24 47K
LM 324
U8
C14 .01
10K R26
R25
150K R6
20K R7
1uf C6
620K R8
.001uf C7
100K R9
36K R10
.001uf C8
1.5M R11
1.5M R12
.047uf C9
.047uf C10
560K R13
JUMPER ARRANGMENT
EXIDY INC.
SCALE: NONE
DATE: 1-10-80
APPROVED BY: MC
DRAWN BY MSHOALS
REVISED MC
BANDIDO AUDIO BOARD
SHT. 1 OF 1
DRAWING NUMBER 77-3368-11

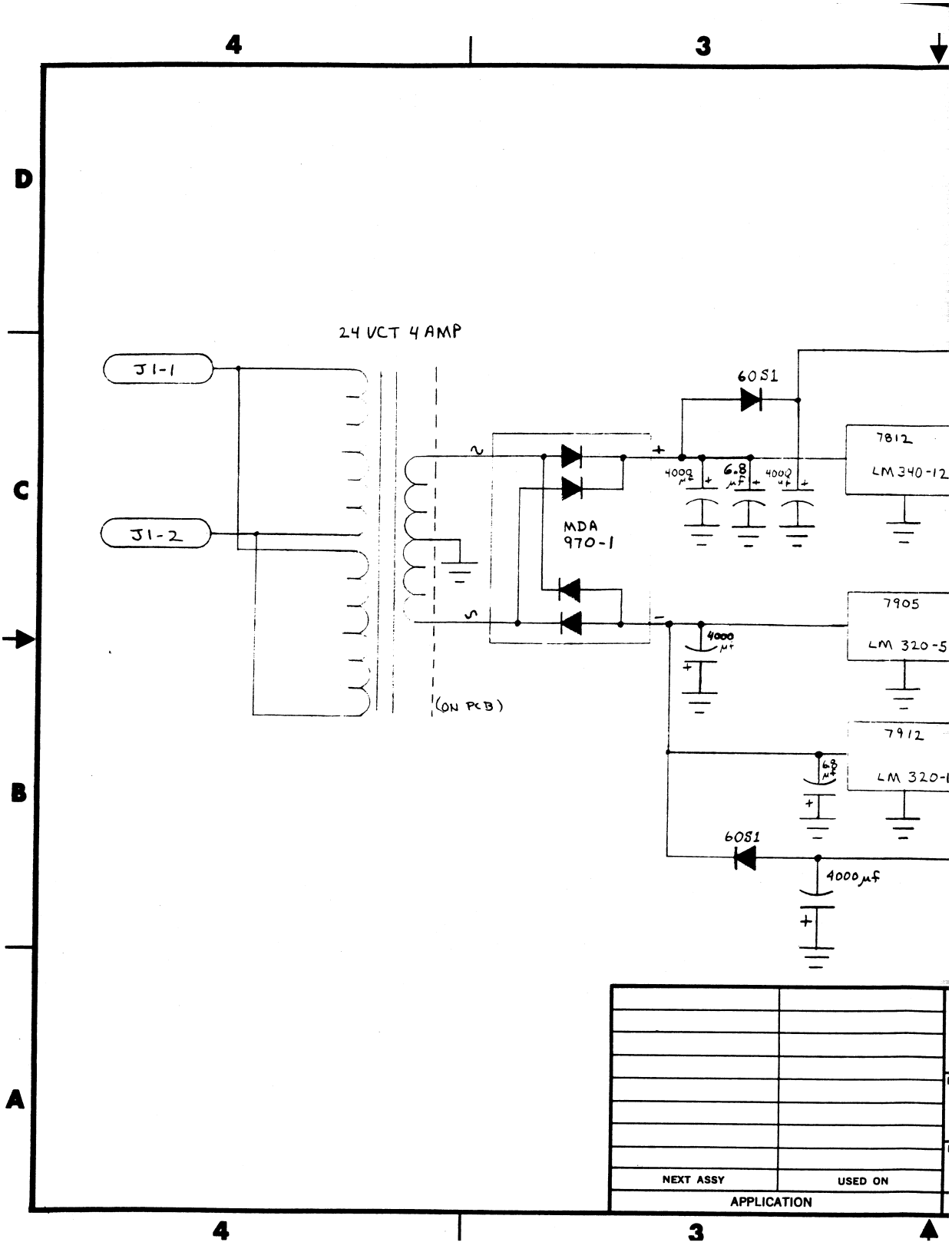
4
3
D
C
B
A
24 VCT 4 AMP
J1-1
J1-2
(ON PCB)
MDA
970-1
6051
6051
4000 µf
6.8 µf
4000 µf
4000 µf
7812
LM 340-12
7905
LM 320-5
7912
LM 320-1
4000µf
NEXT ASSY
USED ON
APPLICATION

REVISIONS				
ZONE	LTR	DESCRIPTION	DATE	APPROVED

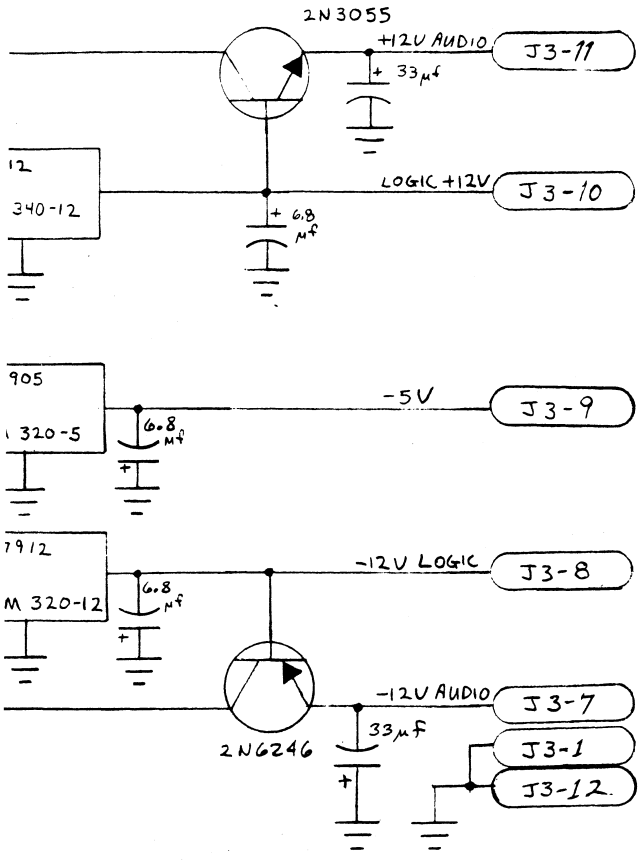

UNLESS OTHERWISE SPECIFIED DIMENSIONS ARE IN INCHES TOLERANCES ARE: FRACTIONS DECIMALS ANGLES ± .XX ± ± .XXX ±	CONTRACT NO.		UNIVERSAL POWER SUPPLY SCHEMATIC
	APPROVALS	DATE	
	DRAWN OWK	26/11/78	+12V Audio & Logic, -12V Audio & Logic, -5V Logic
MATERIAL	CHECKED		
FINISH			SIZE B / CODE IDENT NO. / DRAWING NO. 77-3365-11
DO NOT SCALE DRAWING			SCALE / SHEET OF