BUCK ROGERS™

PLANET OF ZOOM

SEGA

Owner's Manual

Manual Part No. 420-0861

Owner's Manual

Manufactured By

SEGA®

TLX 910-335-1621

Buck Rogers™ Planet of Zoom™ Owner's Manual
Copyright © 1983 by SEGA Electronics, Inc., All Rights Reserved
BUCK ROGERS™ Indicates a Trademark of the Dille Family Trust

Table of Contents

List of Illustrations 1
Introduction 2
Important Notes 3
Game Concept 4
Scoring 5
Option Selection 6
Theory of Operation 7
Self-Test 10
Parts Catalog
Upright Assemblies 14
- Top Assembly 15
- AC Junction Box Assembly 21
- Power Supply Assembly 23
- Volume Control Block Assembly 26
- Coin System Assembly 29
- Light & Speaker Assembly 31
- Flourescent Lamp Assembly 33
- Control Panel Assembly 35

Cockpit Assemblies 37
- Top Assembly 38
- Cabinet Front Assembly 42
- Cabinet Rear Assembly 45
- Sub Cabinet Front Assembly 48
- Sub Cabinet Rear Assembly 51
- Reject Button Assembly 54
- Upper Flourescent Lamp Assembly 56
- Score Board Assembly 58
- Control Unit Assembly 60
- Interface Board Assembly 62
- Accelerator Mechanism Assembly 64
- Accelerator Pedal Assembly 66
- Sensor Board Assembly 67
- Power Supply Assembly 69
- Regulator Board Assembly 71
- Regulator Unit Assembly 73

TABLE OF CONTENTS (Continued)

Power Amp 32VDC, 16W 75
7-Segment LED Board Assembly 76
8-Way Joystick Assembly 77
IC Board Case Assembly 80
Common Assemblies 82
Color Monitor Assembly 83
Electrohome G07-907 85
Wells Gardner K4675 93
Nanao MC-2000-S 110
Wells Gardner K4961 122
Component Shelf Assembly 139
Game Electronics Assembly 142
IC Board Assembly 145
CPU Board Program Assembly 147
CPU Board Assembly 149
EPROM Board Program Assembly 153
EPROM Board Assembly 155
Sound Board Assembly 158
Switching Regulator 162
Schematics 166
Comments Mailer

List of Illustrations

Logic Board Block Diagram 13
Electrohome G07-907 Block Diagram 92
Wells Gardner K4675 Block Diagram 109
Nanao MC-2000-S Block Diagram 121
Upright Cabinet Wiring Diagram 167
Cockpit Cabinet Wiring Diagram 168
Regulator Board
AC Junction Box
Power Supply 169
Volume Control Block 170
Coin System 171
IC Buffer Board
LED Board
Power Amp 32VDC, 16W
Regulator Unit 172
Switching Regulator 601-0158 173
Switching Regulator 601-0692 174
CPU Board 175
EPROM Board 181
Sound Board 191
Electrohome G07-907 194
Wells Gardner K4675 195
Nanao MC-2000-S 196
Wells Gardner K4961 197

Introduction

BUCK ROGERS™ PLANET OF ZOOM™ is a micro-processor based coin-operated electronic game, that makes extensive use of digital integrated circuitry and television monitor concepts. This manual is intended for the use of the maintenance technicians who possess a general working knowledge of solid-state circuitry and video monitor theory. Any individual NOT knowledgeable in these areas SHOULD NOT attempt repair of the electronic portions of the game.

In addition to this manual and training in electronics, troubleshooting and repair will be facilitated by: access to general electronic type handtools, a multimeter, a 50 to 100 MHz oscilloscope and a logic probe would be helpful.

Technical assistance is available toll-free by calling:

1-800-854-1938 outside California

1-800-722-8576 inside California

Parts information assistance is available toll-free by calling:

1-800-854-1900 outside California

1-800-722-8575 inside California

Questions or comments concerning BUCK ROGERS™ PLANET OF ZOOM™ or any of our games are welcome and should be directed to:

Customer Service Manager
SEGA Electronics, Inc.
16250 Technology Drive
San Diego, California 92127-1985

Important Notes

The following note is included in compliance with FCC rules:
WARNING: This equipment generates and uses radio frequency energy and if not installed and used properly, i.e., in strict accordance with the instruction manual, may cause harmful interference to radio communications. It has been tested and found to comply with the limits for a Class A computing device pursuant to Subpart J of Part 15 of FCC rules, which are designed to provide reasonable protection against such interference when operated in a commercial environment. Operation of this equipment in a residential area is likely to cause interference in which case the user at his own expense will be required to take whatever measures may be required to correct the interference.

Other Notes

NEVER replace any components with anything other than exact replacement parts.

NEVER remove circuit board connections while power is on.

DO NOT replace fuses with anything other than the proper value. A blown fuse indicates an overload condition within the game. Replacing fuses with a higher value can cause severe damage to internal components if an overload occurs.

ALWAYS consult the manual before attempting repairs.

SPARE PARTS will be maintained at SEGA Electronics, Inc., for a period of five (5) years after the date of manufacture of the game concerned.

Game Concept

Flying skills and targeting accuracy must be honed to a fine edge, as you take command of Earth's last remaining hope of defense. Responsive 8-way joystick in hand, excitement is the name of the game as the Buck Rogers in all of us pilots a remote controlled spacecraft through the PLANET OF ZOOM™.

In the 25th century, Buck Rogers is confronted by a wicked warrior-world . . . the Planet of Zoom. It is a gargantuan out-of-orbit world that devastates everything in its path, and is ruled by an evil source ship. Buck Rogers mission: To destroy the source ship and liberate the Planet of Zoom before it reaches Earth.

Equipped with single-shot or rapid fire neutron cannon, and 2 level (upright) or 4 level (cockpit) speed control, you race your ship into and through heavily armed channels, through formidible smasher tunnels and around the towering spires of the cosmic city. You bank, dive and climb in pursuit of bizarre alien ships and ground forces to reach the climatic scene and primary target, the all powerful enemy source ship.

Fantastic game play graphics, great stereo sound effects, intense action and unique player controls makes this versatile one or two player video game as super as the Buck Rogers hero it is named for. With 3 to 6 extra ships (operator selectable) your score mounts and rounds proceed until the loss of the last player ship.

Scoring

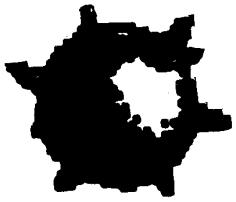

100

200

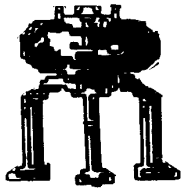

300

500

200

200

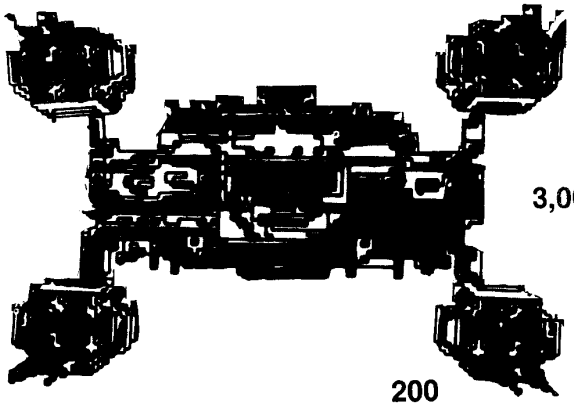

3,000

200

Option Selection

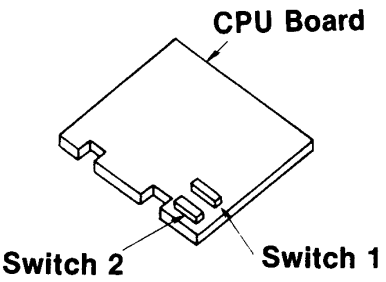

OPTION	SWITCH #1							
	1	2	3	4	5	6	7	8
1 COIN/1 CREDIT	ON	ON	ON	ON	ON	ON	X	X
1 COIN/2 CREDIT	OFF	ON	ON	OFF	ON	ON	X	X
1 COIN/3 CREDIT	ON	OFF	ON	ON	OFF	ON	X	X
1 COIN/6 CREDIT	OFF	OFF	ON	OFF	OFF	ON	X	X
2 COIN/1 CREDIT	ON	ON	OFF	ON	ON	OFF	X	X
3 COIN/1 CREDIT	OFF	ON	OFF	OFF	ON	OFF	X	X
4 COIN/1 CREDIT	ON	OFF	OFF	ON	OFF	OFF	X	X
5 COIN/1 CREDIT	OFF	OFF	OFF	OFF	OFF	OFF	X	X

OPTION	SWITCH #2							
	1	2	3	4	5	6	7	8
COLLISIONS	ON	X	X	X	X	X	X	X
NO COLLISIONS	OFF	X	X	X	X	X	X	X
ACCEL. BY PEDAL	X	ON	X	X	X	X	X	X
ACCEL. BY BUTTON	X	OFF	X	X	X	X	X	X
BEST 5 SCORES ON	X	X	ON	X	X	X	X	X
BEST 5 SCORES OFF	X	X	OFF	X	X	X	X	X
SCORE DISPLAY ON	X	X	X	OFF	X	X	X	X
SCORE DISPLAY OFF	X	X	X	ON	X	X	X	X
DIFFICULT	X	X	X	X	ON	X	X	X
NORMAL	X	X	X	X	OFF	X	X	X
COCKPIT	X	X	X	X	X	X	X	ON
UPRIGHT	X	X	X	X	X	X	X	OFF
3 EXTRA SHIPS	X	X	X	X	X	ON	ON	X
4 EXTRA SHIPS	X	X	X	X	X	OFF	ON	X
5 EXTRA SHIPS	X	X	X	X	X	ON	OFF	X
6 EXTRA SHIPS	X	X	X	X	X	OFF	OFF	X

ON = CLOSED OFF = OPEN X = NOT USED

Theory of Operation

BUCK ROGERS™ is a "state-of-the-art" electronic microprocessor based, video game. The result of hundreds of hours of work, design, research, experiment and more work. However, as with any electronic device, component failure or other problems can result in a game that doesn't function properly, or doesn't function at all. In either case, your game is "down", and so critically, are your profits.

Your objective is to fix it as quickly as possible, and logical troubleshooting goes a long way toward that repair. Although many troubleshooting methods may be familiar to you, procedural logic is common among them, and might be stated in this order: visual inspection, symptom recognition, symptom isolation, function isolation, component isolation and repair. Familiarity with the equipment in question will allow you to bypass one or more of these steps, as any particular problem may be obvious to you, or may have happened before. In general though, these 6 steps form a good premise upon which to approach your "down" game.

An extremely important item in our procedure is the first mentioned, giving the gear the "once over". A large percentage of failures found in electronics, show themselves visually and often a great deal of time can be saved by inspecting for burnt or blown components, loose or disconnected wiring or connectors, or PCB traces burnt or pulled up. Thorough visual inspections become increasingly important the closer you get to the faulty item, and should be repeated each time another portion of the game is eliminated. Symptom recognition (as with all electronic troubleshooting) in your BUCK ROGERS depends first, on knowing what a proper display is, and second, knowing how your display differs from a normal one. Symptom isolation follows naturally; (i.e., "I have no picture", "I have no sound", "I have no control over the ship", "the picture is scrambled"), ergo, a video, audio, input or logic problem. Function isolation, such as a sync problem with the video, requires that you consider those functions that go to make up video sync. Is it a monitor problem, or an "on-the-board" problem? A monitor input check to verify the signal will tell you. Does the board have the voltage (from the power supply) that it needs? Yes? We must have a board failure, as we've just isolated down to function. Taking our sync problem further, before we begin our search for an individual component, let's reapply that first item in

our "Logical Troubleshooting Procedure". Look at the board. Open resistors, diodes, and capacitors often give themselves away.

Noticing a trace literally burned open can save you serious "down-time". The board looks OK, so on we go. Specific component isolation relates to the specific nature of the failure, component commonality, proper inputting (both signal and power) and proper outputting (as in the case of an output held high, low, or floating by input port failure in the succeeding state). More general problems (such as a total loss of video sync) requires the more involved procedure of systematic elimination of possibilities. This operation can be expedited however, by dividing the circuit in half, establishing a "go-no/go" at that point, and again dividing the suspect circuit portion in half. The largest possible areas can be eliminated in this manner, dividing and sub-dividing until the individual component failure is found.

BUCK ROGERS™ is a microprocessor based, digital-integrated circuit computer video game. The heart of the computer is the CPU (IC13, Zone8-D, Sht. 1, CPU Bd., 834-5120), a Z80A (P/N 315-0041). The Alpha type device MUST ALWAYS be used, as the Z80 is not fast enough to run the programs.

Master timing is crystal-driven at 20.00 MHz (X1, Zone 8-A, Sht. 1, CPU Bd., 834-5120) through IC34, 28, and 35. CPU timing is taken from IC34 p-7, applied to IC35 p-2 (Zone 8-B, Sht. 1, CPU Bd., 834-5120) clocked out of IC35 at p-13, inverted by IC28 (Zone 8-C, Sht. 1, CPU Bd., 834-5120) and finally applied to pin-6 of the CPU (IC13). Additionally, IC13 provides 5 MHz and 10 MHz for video timing and character generation, as well as processed interrupts and timing for the Select Address processor IC50 (Zone 8-D, Sht. 5, CPU Bd., 834-5120).

Manual system reset (Power-On) appears as a LO at IC16 p-4 (Zone 8-D, Sht. 1, CPU Bd., 834-5120) and is then felt at pin-26 of the CPU (IC13, Sht. 1, Zone 8-D, CPU Bd., 834-2150). Normal program interrupts (INT) are felt at pin-16 of the Z80A (an edge-triggered LO), and are the result of Input/Output activity timing with vertical blanking (an approx. 2 msec. instruction interrupt). The WAIT signal is used to synchronize that I/O activity during an interrupt to the CPU. IC1 and 2 (Zone 6-D, Sht. 1, CPU Bd., 834-5120) are address bus drivers. Two of the sixteen address lines pass through IC30 (Zone 6-D, Sht. 1, CPU Bd., 834-5120) and subsequently drive the Chip Enable inputs of EPROM IC's 3, 4, 15 and RAM IC 14 (Sht. 1, CPU Bd., 834-5120). IC's 113, 114, 121 and 122 (Sht. 4, CPU Bd., 834-5120) are input ports on the data bus. The 44-pin flat connector supplies player input information, service switch,

game start and coinage to the input ports. IC119 and 121 input Coin B, and IC120 and 121 input Coin A, together with Game Start, Self-Test, Up/Down and Acceleration to I/O processor IC106 (Zone 4-D, Sht. 4, CPU Bd., 834-5120). IC111, 112 and 114 accesses/buffers Player Left/Right data, IC111 and 113 interfaces Fire data, and Option Selection is shared by all 4 74LS244's. Located in the Volume Control Block is the Self-Test switch. When closed, it applies a LO to IC119 p-6 (Zone 7-C, Sht. 4, CPU Bd., 834-5120) initiating a systems/function verification outlined on the following page:

Self-Test

BUCK ROGERS™ is equipped with a diagnostics sequence that is initiated by pressing the Self-Test button located on the Volume Control Block Assembly. The test appears in the following order, with each major catagory ending with the press of the Self-Test button:

1.

RAM CHECK
EPROMS CHECK
IC 3 GOOD
IC 4 GOOD

2. - Switch condition (ON or OFF) is verified by actuation.

INPUT TEST

DIP SWITCHES

	8	7	6	5	4	3	2	1
DIP SW 1	O	O	C	C	C	C	C	C
DIP SW 2	C	C	C	O	C	C	C	C

CONTROLS

START	OFF
COIN 1	OFF
COIN 2	OFF
SERVICE	OFF
RIGHT	OFF
LEFT	OFF
DOWN	OFF
UP	OFF
FIRE	OFF
ACCEL	1

3. - Color tracking and seperation

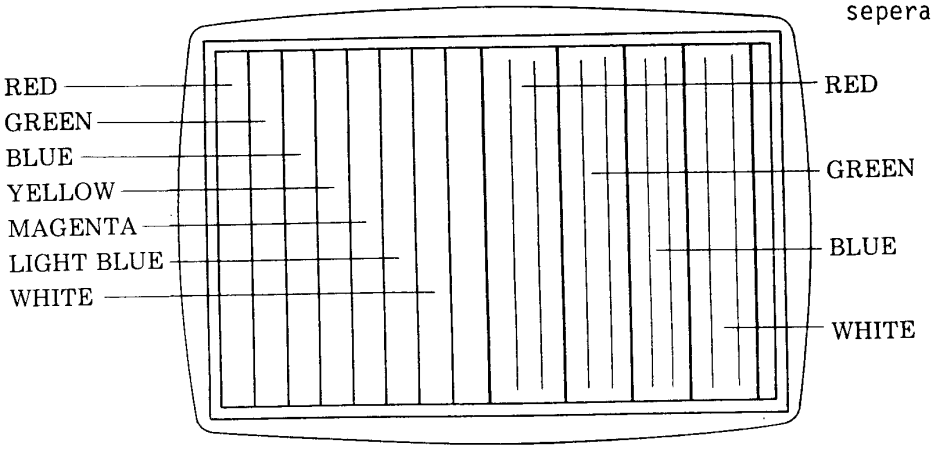

4.

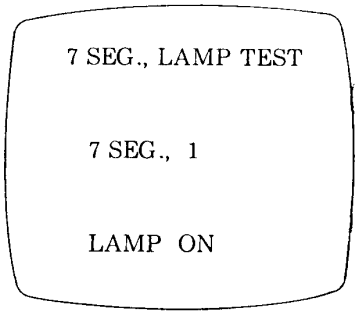

- START button sequences LED numerical read-out 0 - 9

5.

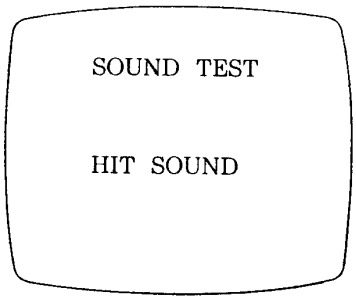

- FIRE button initiates each sound audibly.
- START button sequences each sound in turn.

6. Character ROM Test

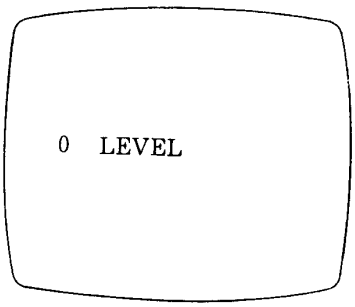

- Video display of character memory by Object Level.
- START button sequences Object Levels 0 through 7.

Due to the striking graphics employed in BUCK ROGERS™, memory requirements for background generation are significant. On the EPROM Bd. (834-5121) there are sixteen (16) 27128-3 16K X 8 EPROMs that hold video character, positioning, color and timing information. Background generation accessable memory (RAM) is provided by TTL IC14 and IC84 (Zone 2-D and 4-B respectively, Sht. 1, on the CPU Bd., 834-5120), in addition to IC's 6-9 on Sht. 3 of the CPU (834-5120). Back on the EPROM Board, program storage is organized into eight (8) levels of multiplexed data for troubleshooting efficiency (Sheets 3 through 10, EPROM Bd., 823-5121), with final pre-CPU input "mux" occurring on Sht. 2, EPROM Bd., 834-5121. Armed with program data and input port data, the CPU can then integrate timing and sync (Sht. 2, CPU Bd., 834-5120) with color requirements (Sht. 6, CPU Bd., 834-5120) to produce complete color video at the Output Ports consisting of IC's 97, 98, 109 and 110 (Sht. 6. CPU Bd., 834-5120).

Just as the microprocessor Z80A is the heart of the game computer, so too is the 8255A-5 (IC113, Zone 2-D, Sht. 4, CPU Bd., 834-5120) the center of activity for Sound. Called a Sound Generator, IC113 interfaces data and address bus, as well as the noise generators on the Sound Bd. (834-5122), through the 20 pin flat cable, enabling specific sounds processing circuits. These circuits consist of individual sounds for Player ship flying sounds, rebound, explosion, laser and alarm. Those complete sounds not originating within the 8255A-5 are enabled by the Sound Generator through the noise generators on the Sound Bd. IC28 and VR1 (Volume Control, Sht. 1, Zone 6-A, Sound Bd.) set input biasing for the Audio Amplifier LA446 at an 8 ohm load.

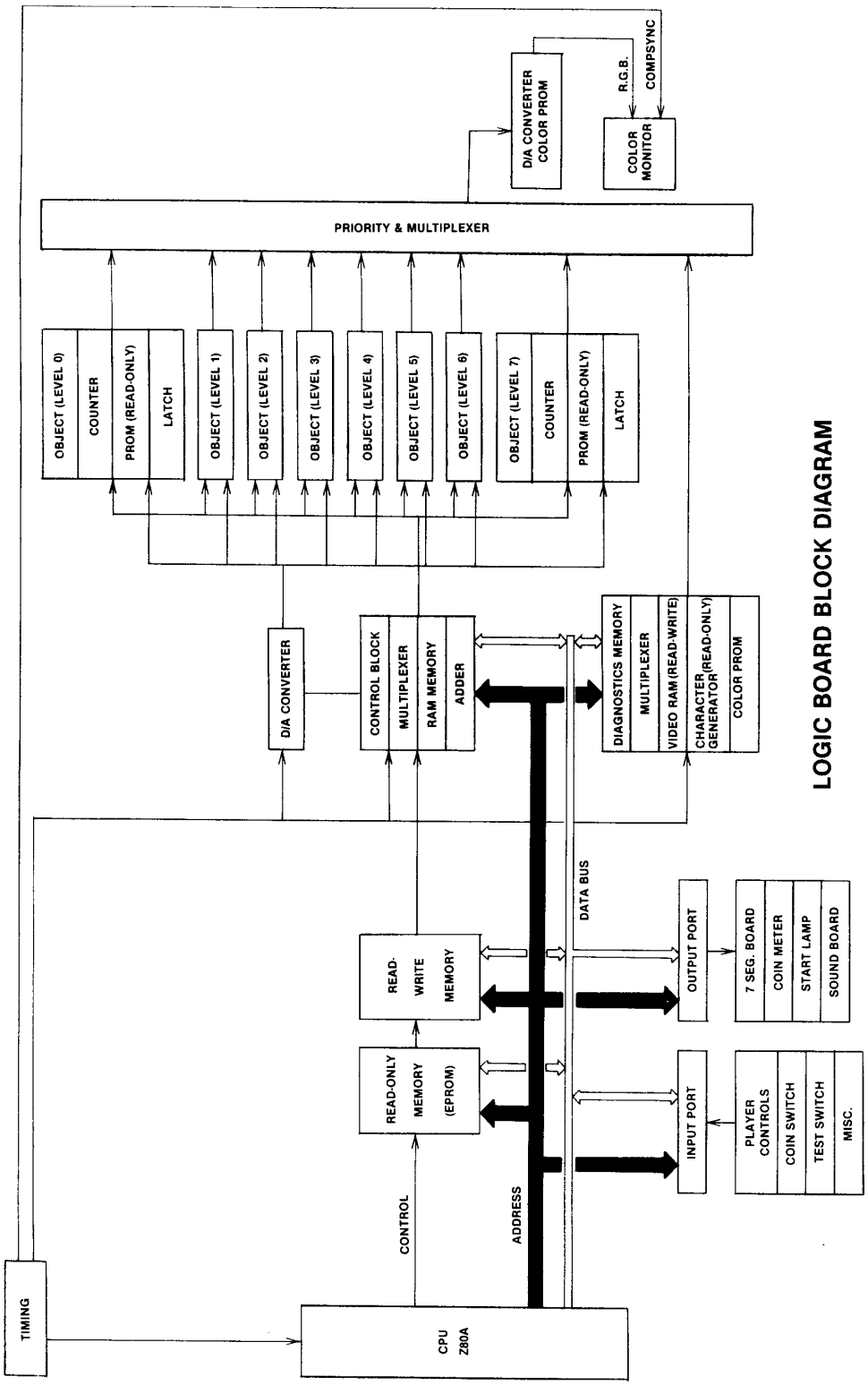

LOGIC BOARD BLOCK DIAGRAM

CPU Board Assembly

834-5120

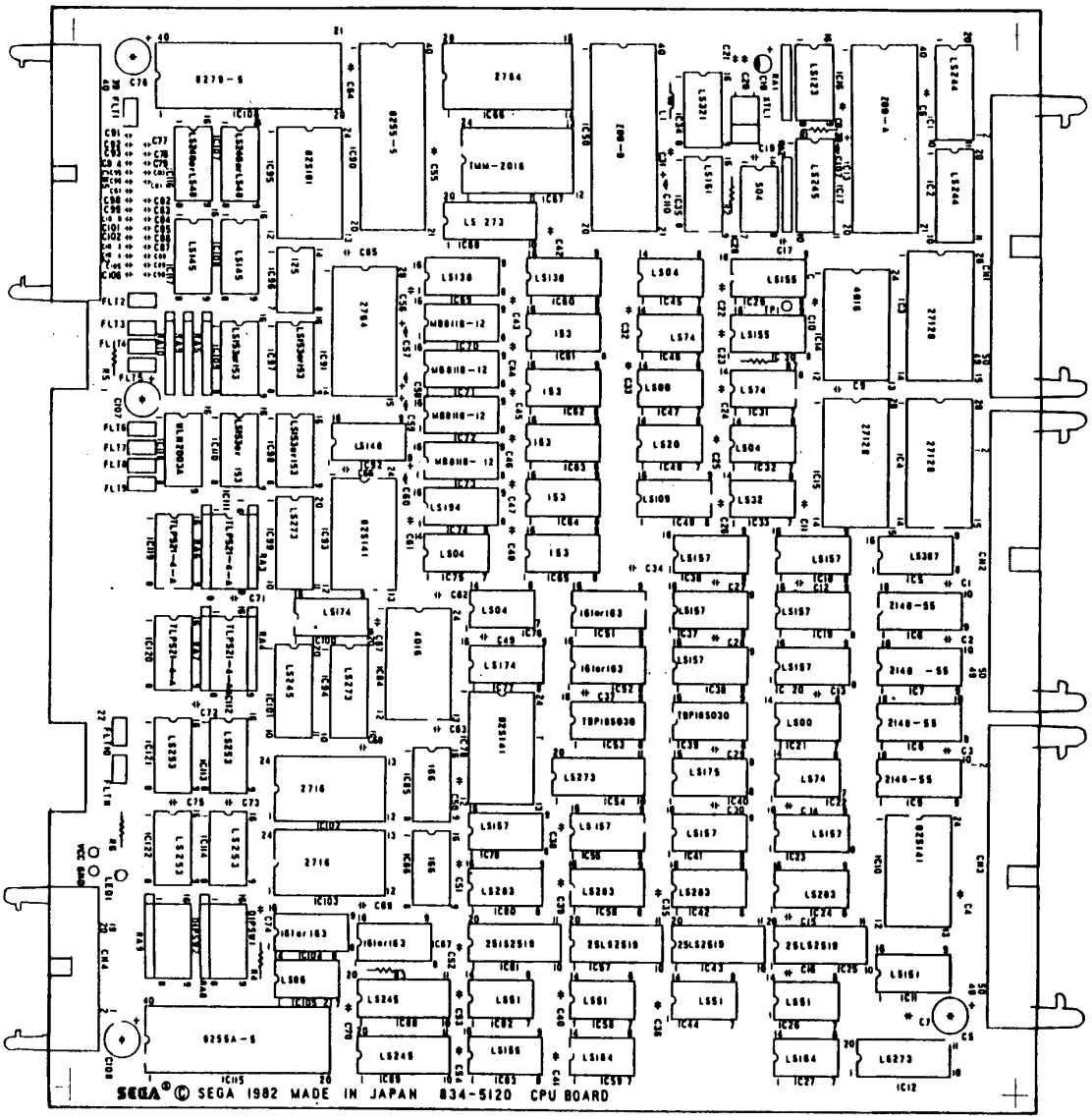

EPROM Board Assembly

834-5121

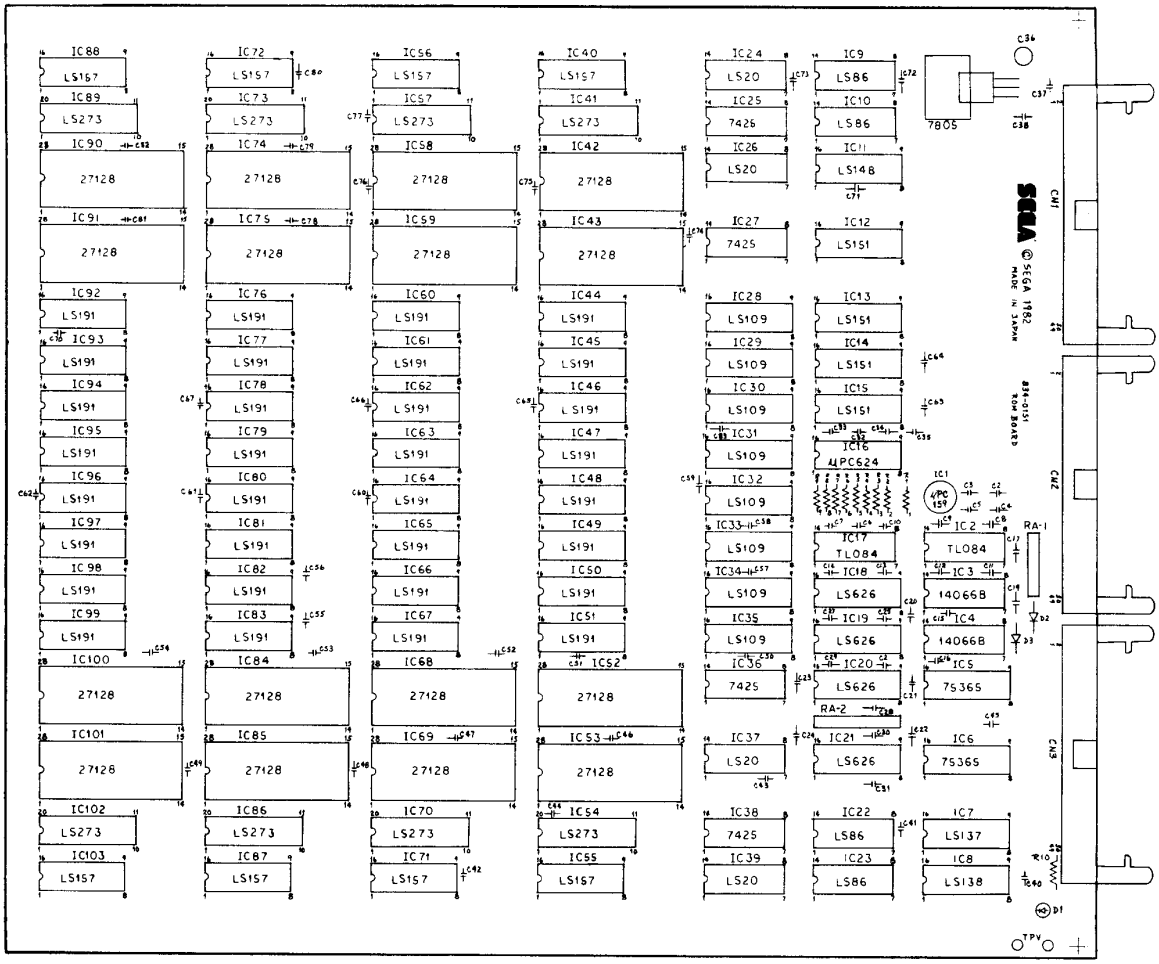

Sound Board Assembly

834-5122

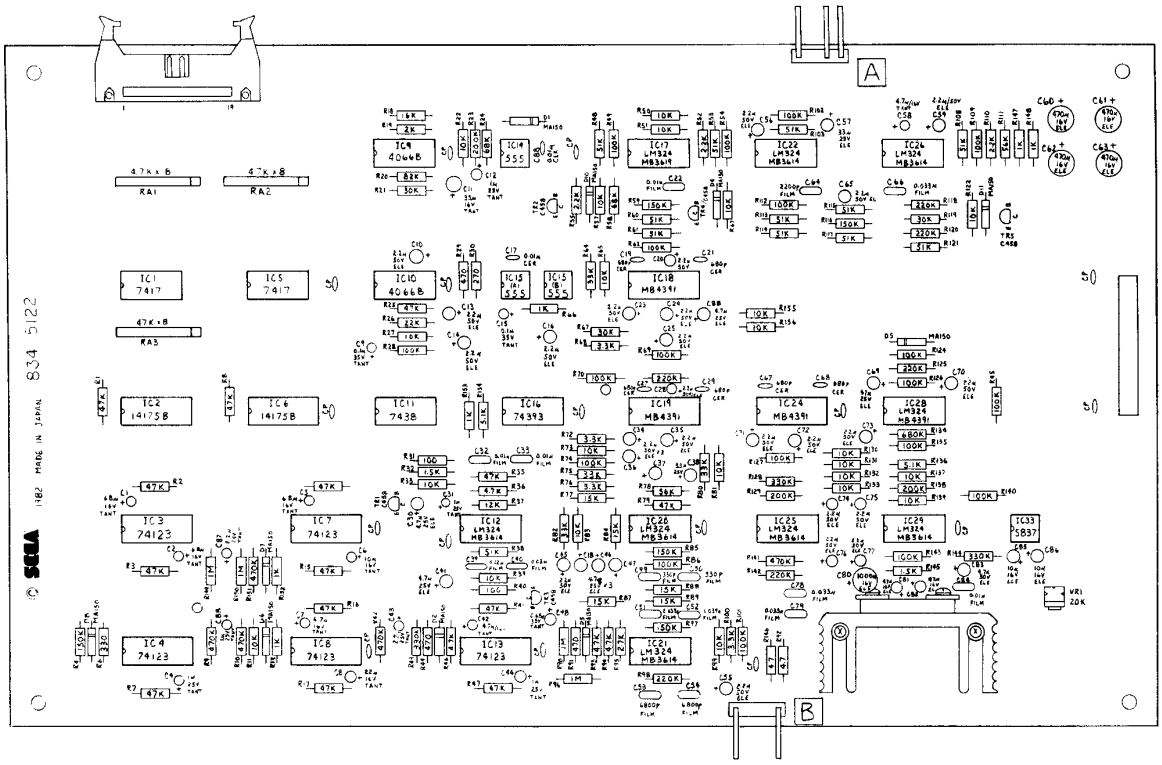

REVISIONS				
ZONE	LTR	DESCRIPTION	DATE	APPROVED
	–	SEE SHT #1 M.G.A		

ASSY, JUNCTION BOX 800-3244-00 FUSE 2 AMP
EMI FILTER
250-0615-01 P/O 800-3315-00
E
250-0615-00 P/O 800-0367-02
XFMR
+5V
-5V
GND
+12V
ASSY, POWER SUPPLY 800-0367-02
C P16
ASSY, COMPONENT SHELF 800-3315-00
ASSY, FLUOR LAMP 800-0147-02
SPEAKER 8 SQ. 10 W 130-00020-00
ASSY, LAMP/SPEAKER 800-0415-01
P19
P9
SOUND BOARD
P8
ASSY GAME ELECTRONICS 800-3328-00 P/O 800-3315-00
ASSY, MONITOR COLOR 800-0362-02
AC IN
P27A
P27B
800-0408-04
P40
800-0369-01 P/O 800-0362-02
P26 A
B P16
ASSY, FLUOR LAMP 800-0147-04
P32
800-3352-00 P/O 800-0362-02
D P24
P1
P10
ASSY, CONTROL PANEL 800-3314-00
8 WAY JOY-STICK ASSY 834-0462 P/O 800-3314
800-0408-03
2 PLAYER FIRE RT
FIRE LEFT
SLOW LEFT
FAST LEFT
LEFT
SLOW RIGHT
RIGHT
FAST RIGHT
UP
DOWN
1 PLAYER
GND
800-3316-00 P/O 800-3315-00
800-3331-00 P/O 800-3328-00
P2
ASSY COIN SYSTEM 800-3274-01
COIN COUNTER P/O 800-3274-01
COIN MECH A
COIN MECH B
NO
C
ASSY, SERVICE & RESET BLOCK 800-3282-01 P/O 800-3294-01
SERVICE
TEST

QTY REQD	CODE IDENT	PART OR IDENTIFYING NO.	NOMENCLATURE OR DESCRIPTION	ITEM NO.
		PARTS LIST		

UNLESS OTHERWISE SPECIFIED DIMENSIONS ARE IN INCHES
TOLERANCES ARE:
FRACTIONS ± DECIMALS .XX ± .XXX ± ANGLES ±
MATERIAL
FINISH
NEXT ASSY
USED ON
APPLICATION
DO NOT SCALE DRAWING

CONTRACT NO.
APPROVALS DATE
DRAWN
CHECKED
MECH
ELEC
MFG
PROJECT

Gremlin/SEGA

Upright Cabinet Wiring Diagram

SIZE	CODE IDENT NO.	DRAWING NO.	REV
D		700-0113	A

SCALE NONE SHEET 3 OF

700-0113 | A

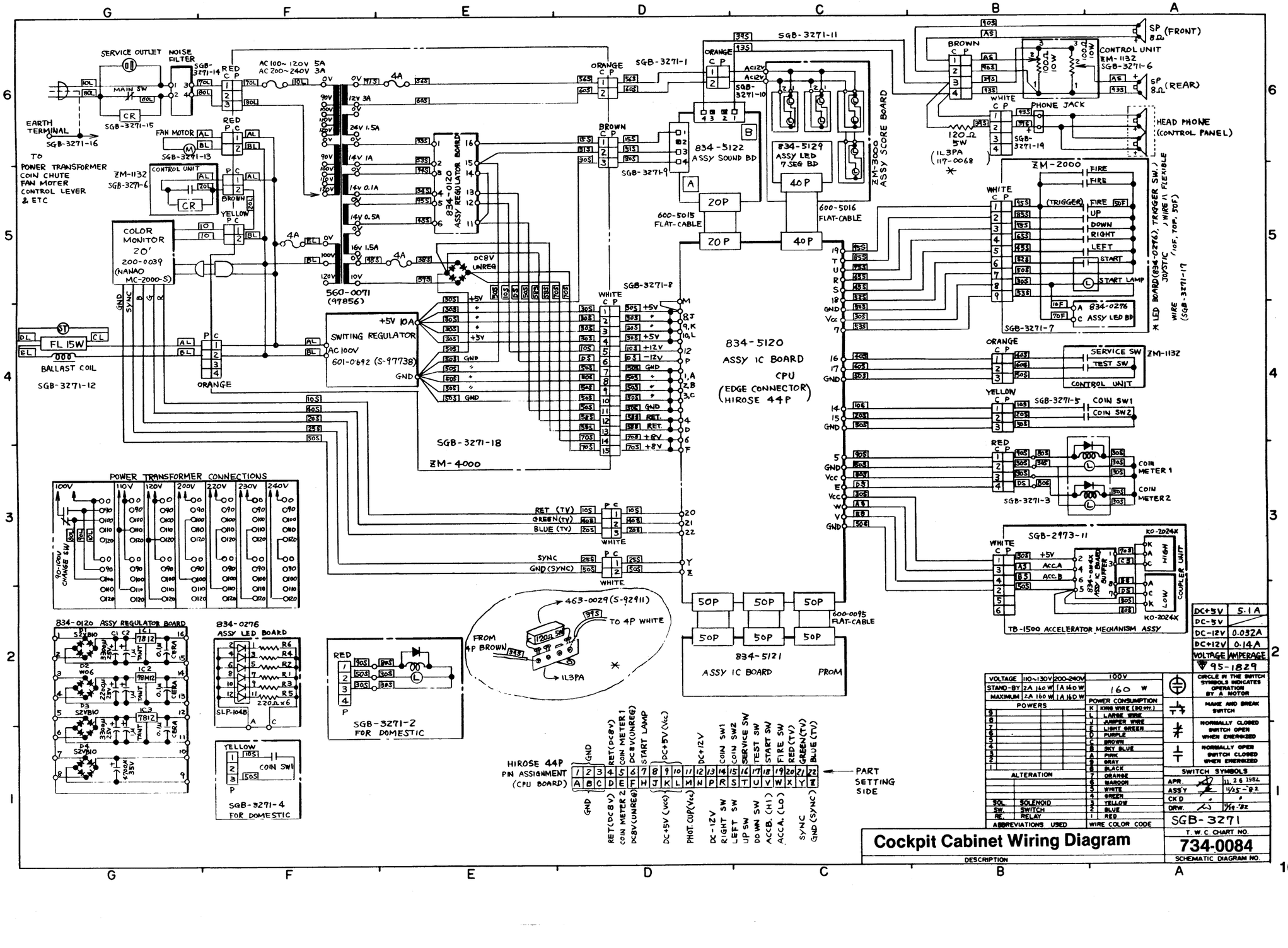

VOLTAGE	110~130V	200~240V
STAND-BY	2A 160 W	1A 160 W
MAXIMUM	2A 160 W	1A 160 W

POWERS

ALTERATION

SOL. SOLENOID
SW. SWITCH
RE. RELAY

ABBREVIATIONS USED

100V 160 W

POWER CONSUMPTION

K	KING WIRE (30 ctr.)
L	LARGE WIRE
J	JUMPER WIRE
E	LIGHT GREEN
D	PURPLE
C	BROWN
B	SKY BLUE
A	PINK
9	GRAY
8	BLACK
7	ORANGE
6	MAROON
5	WHITE
4	GREEN
3	YELLOW
2	BLUE
1	RED

WIRE COLOR CODE

Regulator Board Assembly 834-0120

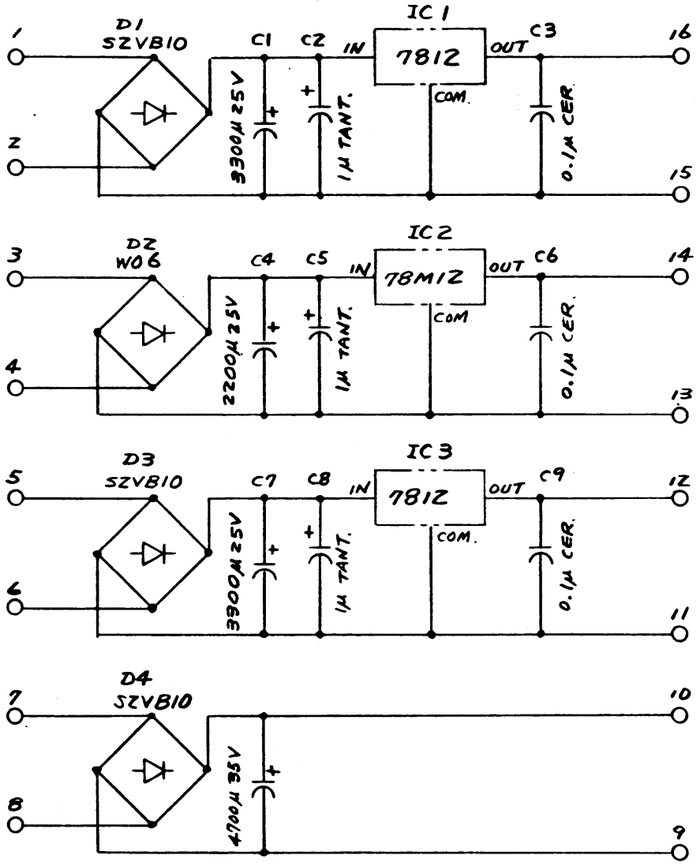

AC Junction BoxAssembly 800-3244

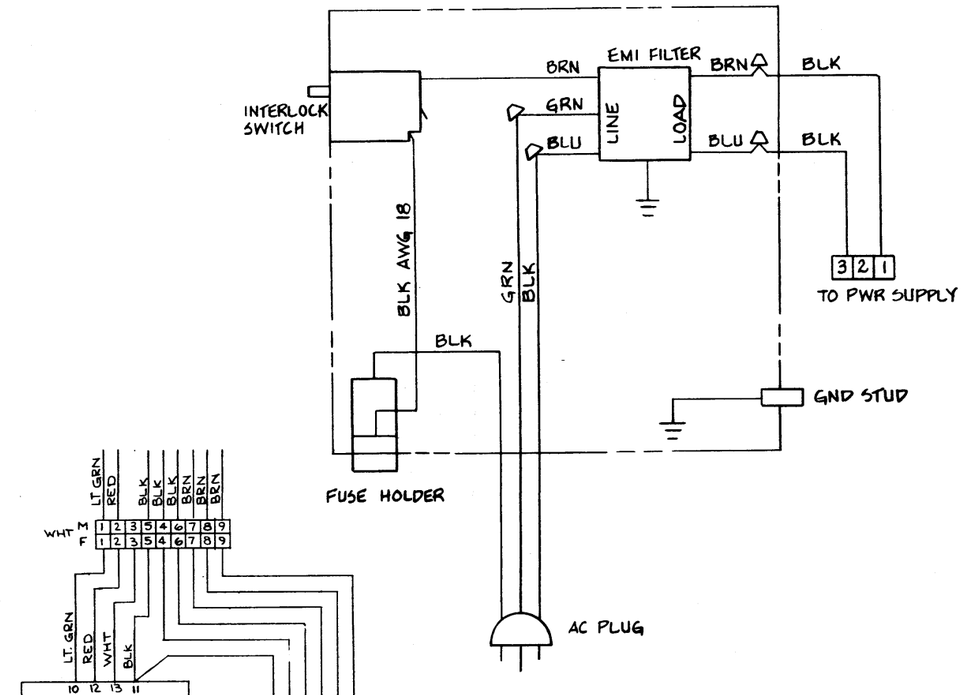

Power Supply Assembly 800-0367-02

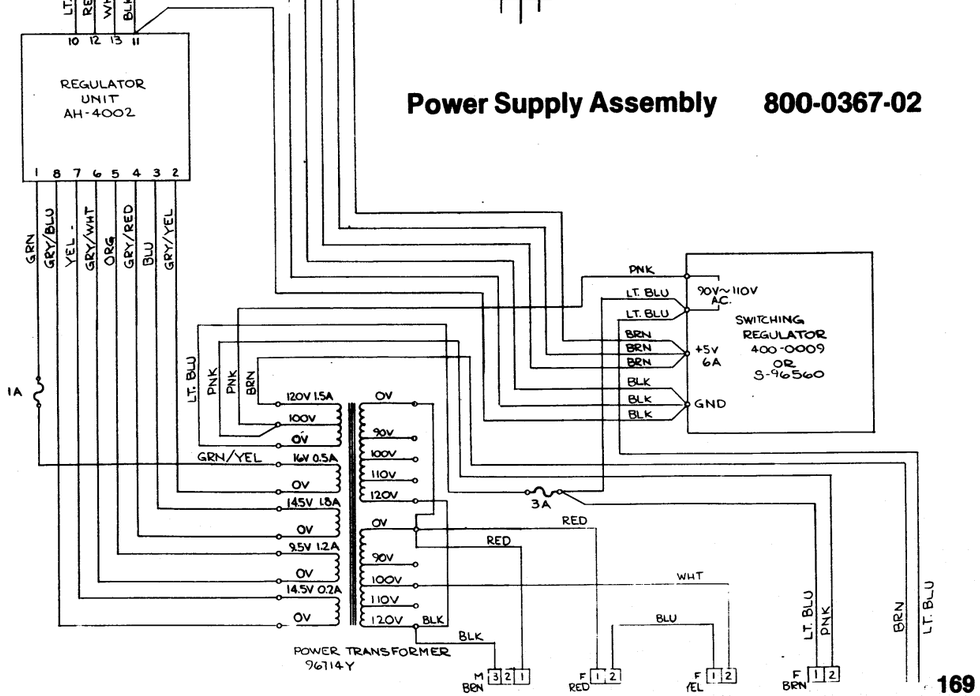

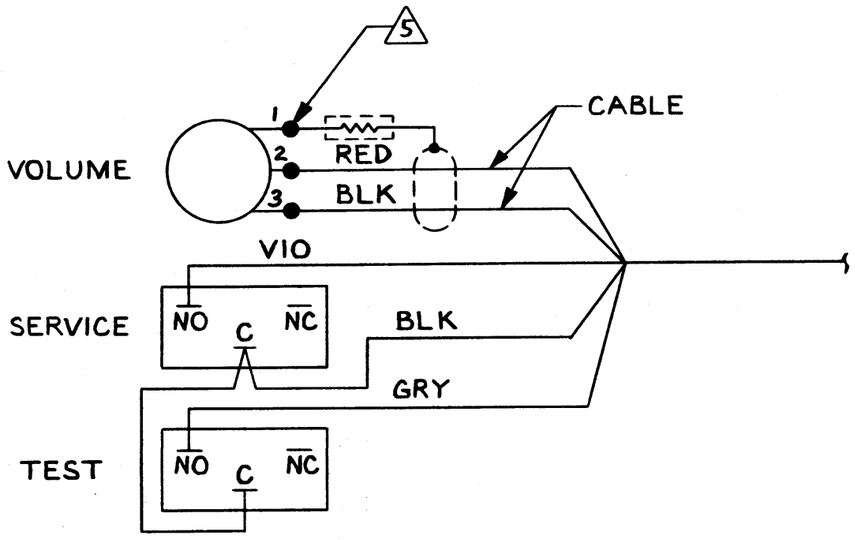

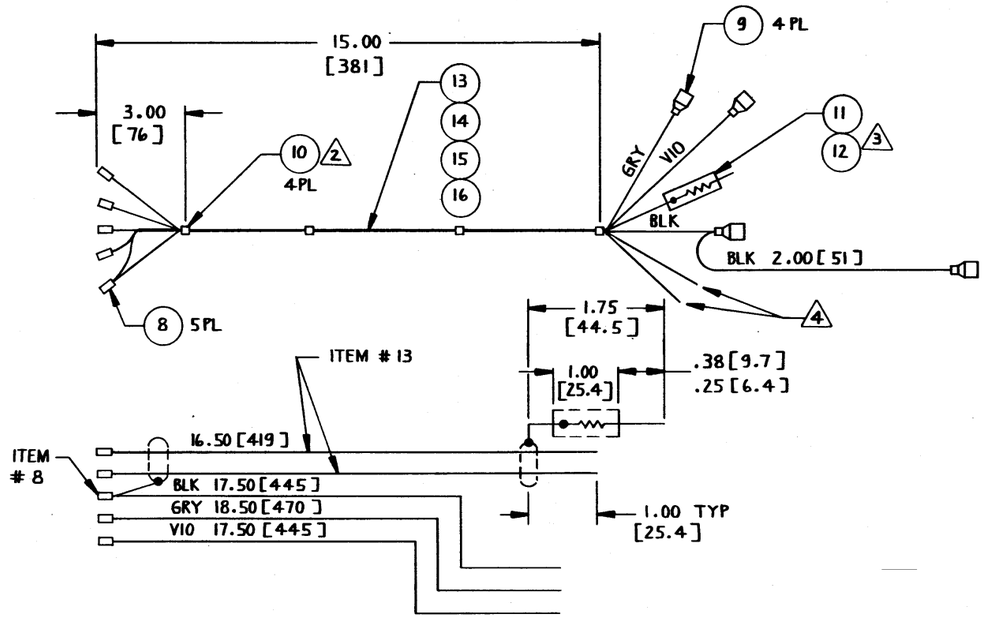

-00 Assembly

Volume Control Block Assembly 800-3282

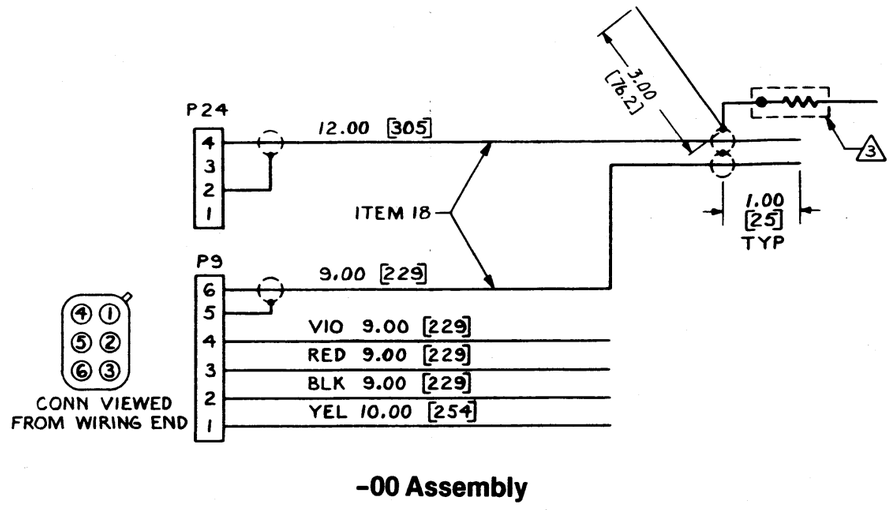

-00 Assembly

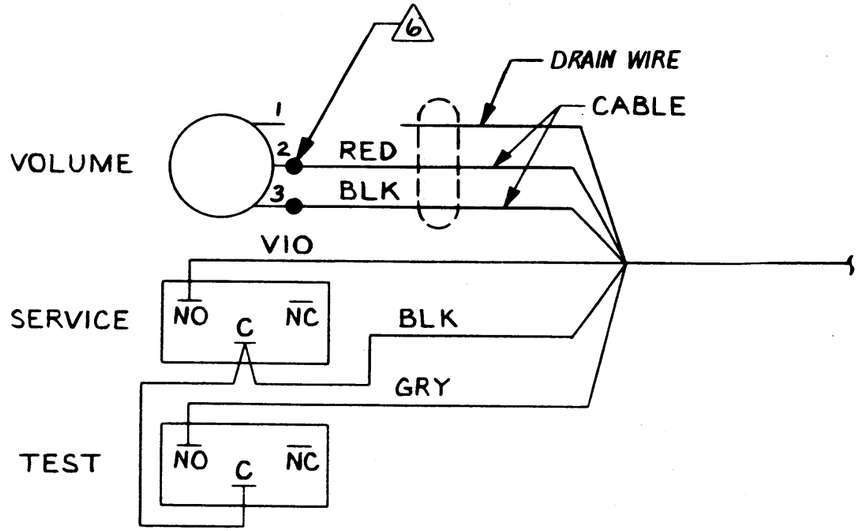

-01 Assembly

Volume Control Block Assembly

800-3282

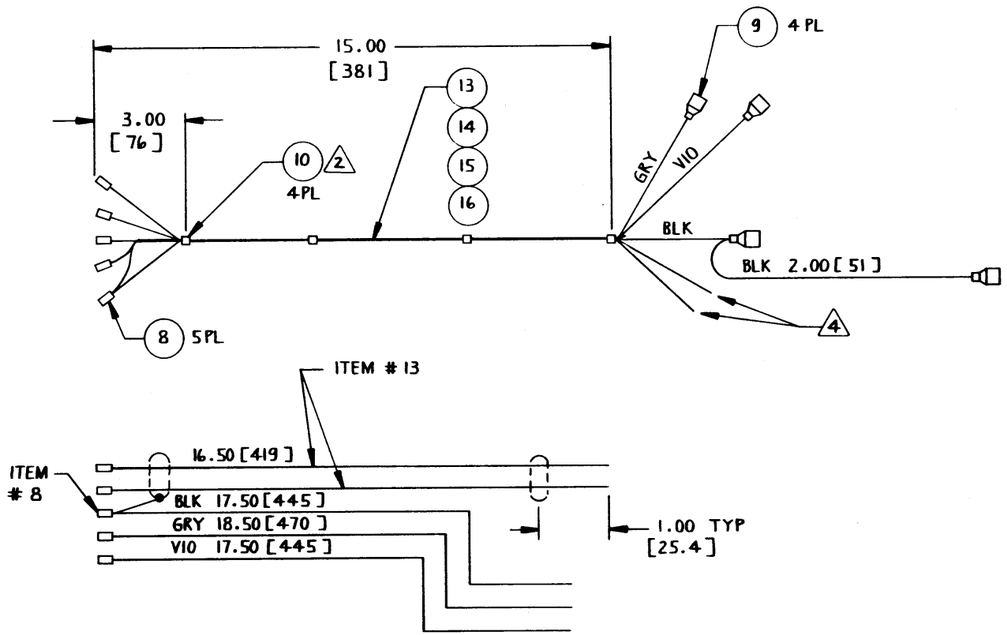

-01 Assembly

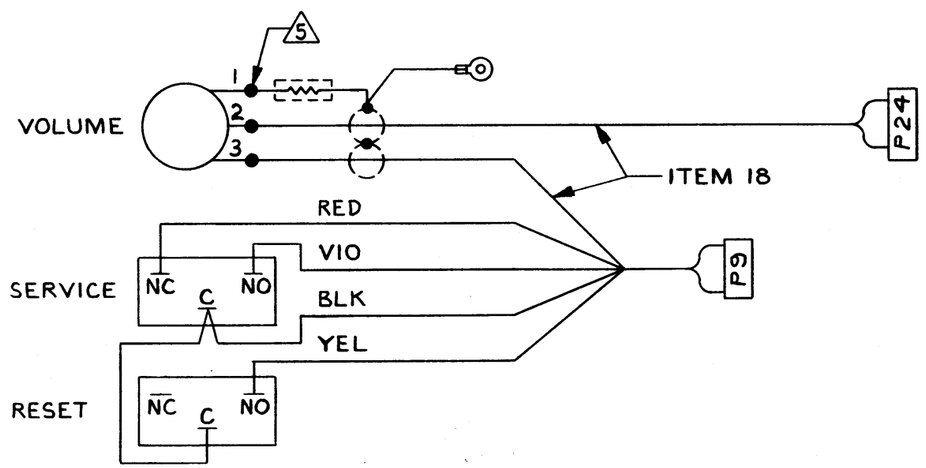

-02 Assembly

Volume Control Block Assembly

800-3282

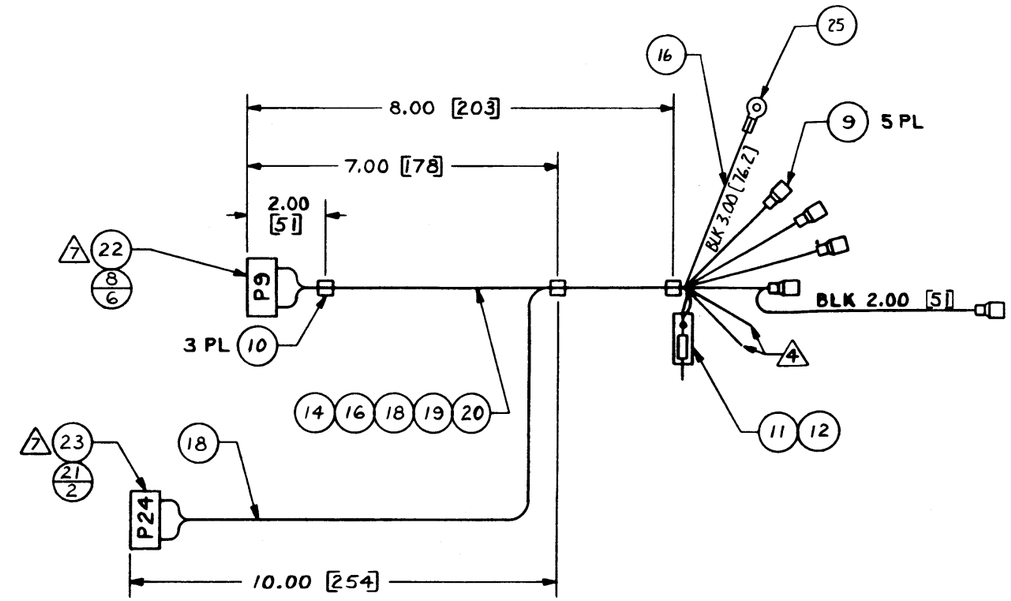

-02 Assembly

Coin System Assembly

800-3294-01

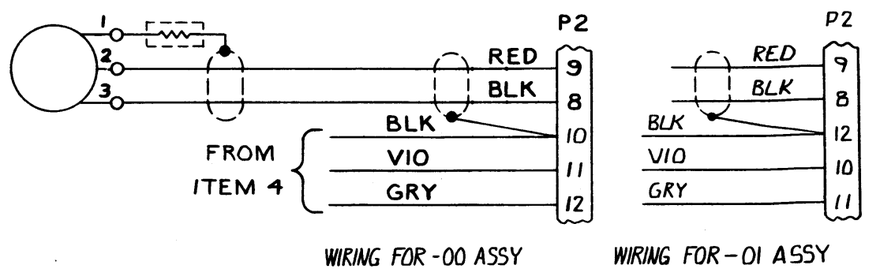

IC Buffer Board Assembly

834-0104

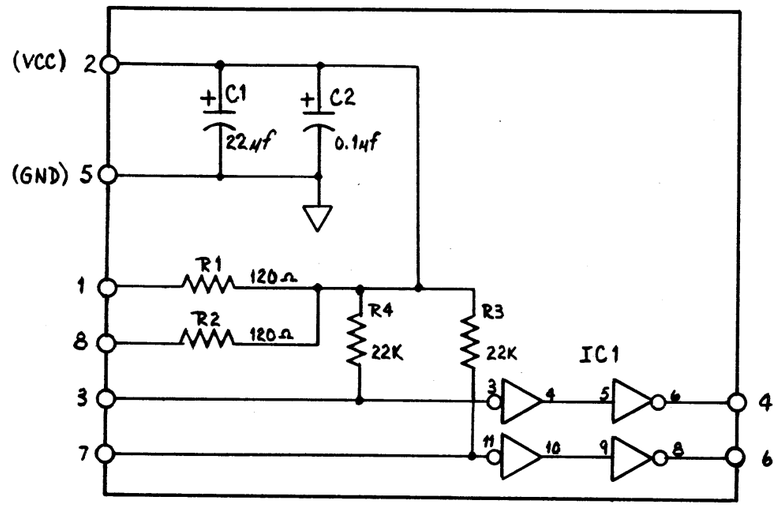

LED Board Assembly

834-0276

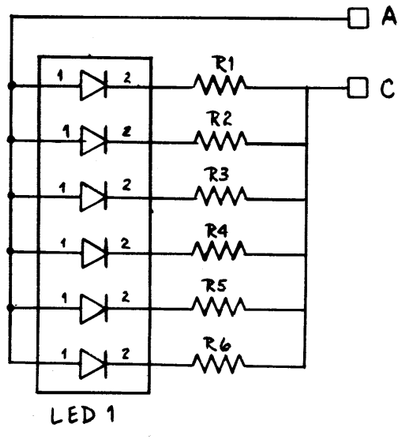

Power Amp Assembly

834-0121

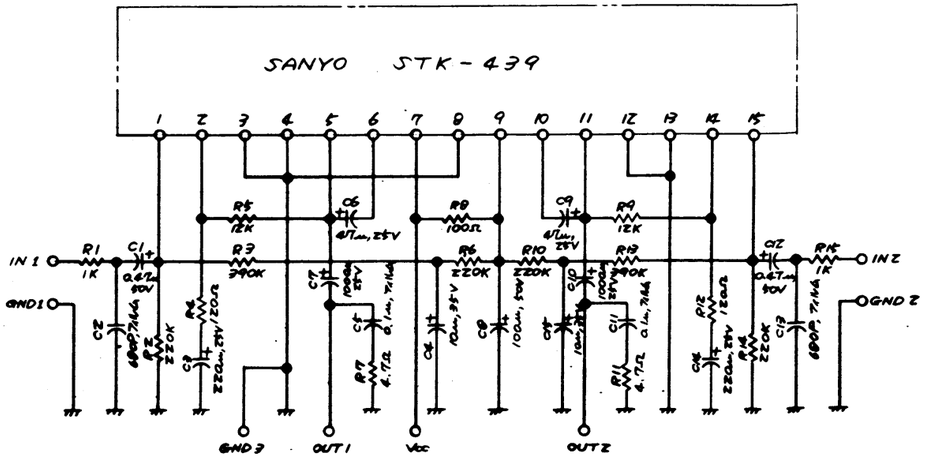

Regulator Unit

601-0612

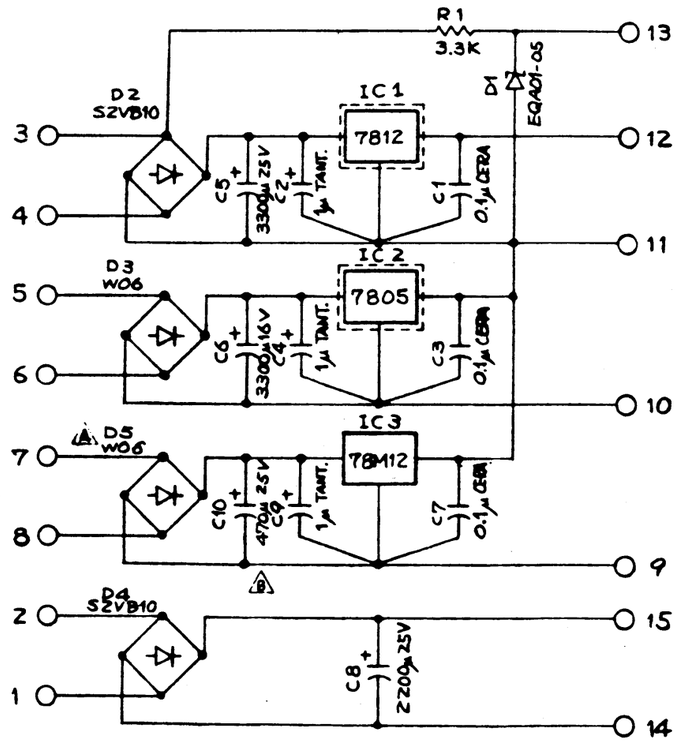

REVISIONS				
ZONE	LTR	DESCRIPTION	DATE	APPROVED
	A	RELEASED SD	8-4-81	

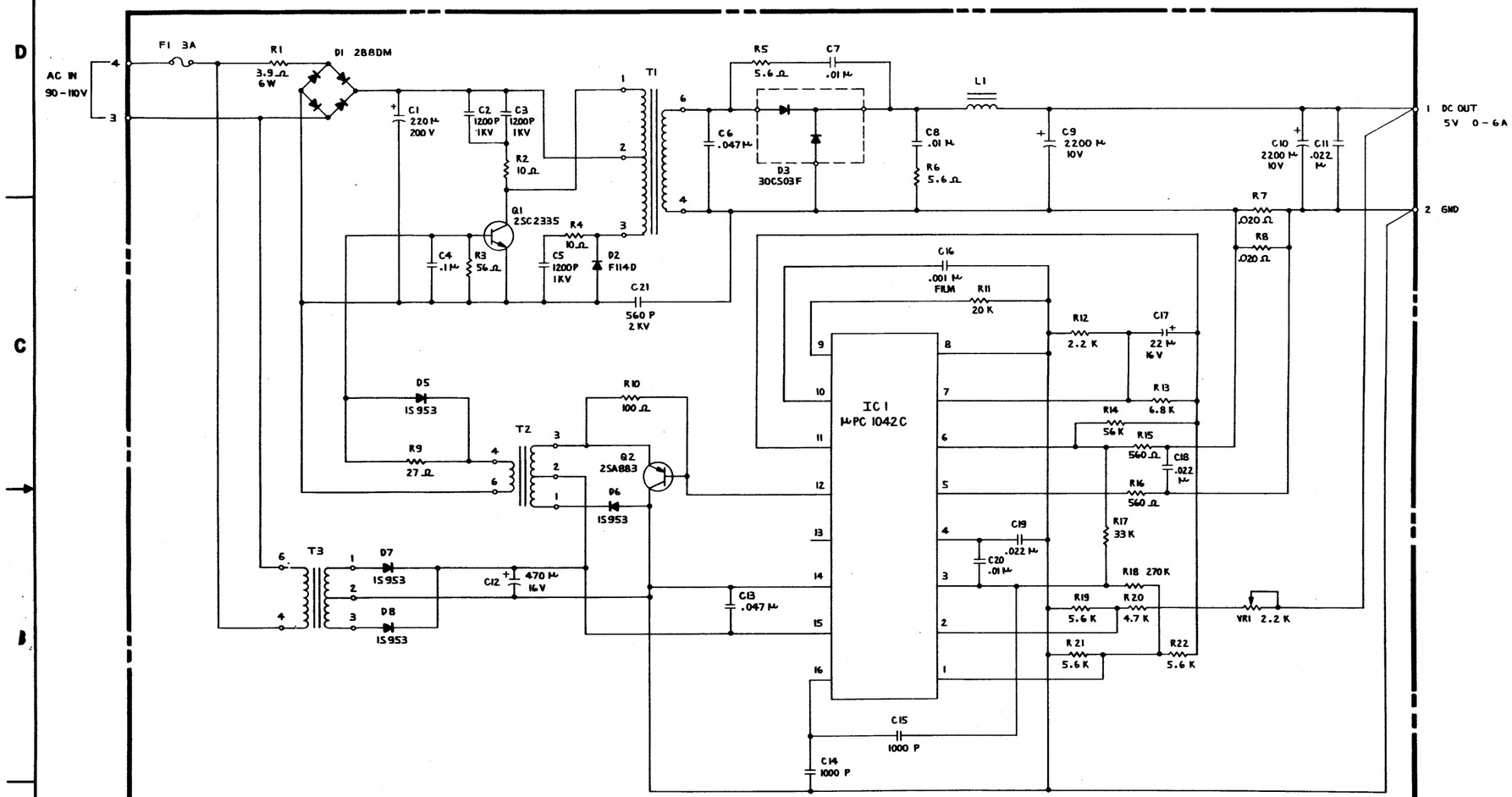

1. R7, R8 AS REQUIRED OTHERWISE USE JUMPER WIRE .

NOTES :

QTY REQD	CODE IDENT	PART OR IDENTIFYING NO.	NOMENCLATURE OR DESCRIPTION		ITEM NO.
			PARTS LIST		

NEXT ASSY	USED ON
APPLICATION	

UNLESS OTHERWISE SPECIFIED DIMENSIONS ARE IN INCHES
TOLERANCES ARE:
FRACTIONS ± DECIMALS .XX ± .XXX ± ANGLES ±

MATERIAL

FINISH

DO NOT SCALE DRAWING

CONTRACT NO.

APPROVALS	DATE
DRAWN SOM DUONG	8-17-81
CHECKED G. GRICE	8-17-81
MECH	
ELEC	
MFG	
PROJECT	

Gremlin/SEGA
San Diego, California 92123

Switching Regulator

SIZE	CODE IDENT NO.	DRAWING NO.	REV
D		601-0158	A

SCALE NONE SHEET 1 OF 1

601 - 0158 | A

REVISIONS				
ZONE	LTR	DESCRIPTION	DATE	APPROVED
	–	SEE SHT 1		

AC1
AC2
FG
F1 (SLOW)
C1 0.1µf
L1
C2 220pf
C3 220pf
R1 6.8Ω
TH1
C4 1000pf
D1 S4VB40
C5 330µf
D2
C7 2200pf
C6 3300pf
R4 39K
R2 6.8K ⚠
R3 6.8K ⚠
T1
F2
F1
D3
S1
S2
D4
R5 10Ω
C8 0.01µf
J1
J2
L2
P2
P1
+V
-V
VR1 1K
R29 680Ω
R7 330Ω
C26 0.047µf
C17 0.01µf
C11 1000µf
C12 1000µf
C13 1000µf
C16 0.01µf
R30 1K
C24 1µf
R28 100Ω
R27 100Ω
IC2 TL431CP
R10 2.2K
PC1 ON3110
D5
B1
B2
B3
D6
D7 MA161LFS
R8 1K
C18 100µf
C19 33µf
R18 68K
R13 8.2K
R12 100Ω
R9 560Ω
Q6 2SA564A
ZD1 RD5.6E-B2
R14 ⚠ 100Ω
R15 820Ω
R16 220K
R17 12K
Q5 2SD889
C20 1000pf
IC1 HA1755PS OR M51848P
R11 1.8K
D8 MA161LFS
C22 0.1µf
C21 0.01µf
R22 15Ω
Q2 2SC1384
R20 82Ω
R19 1.5K
Q1 2SC2739HD
Q3 2SA886
R21 470Ω
R26 0.470Ω
C23 1000pf
R23 ⚠ 220Ω
R25 180Ω
R24 150Ω
TH2
Q4 2SC1685

LAST USED	UNUSED
R30	C9, C10, C14,
C26	C15, C25, R6,
D8	R31
ZD1	
IC2	
PC1	
TH2	
F1	
T2	
L2	
J2	
Q6	
VR1	

⚠ VALUE MAY VARY.

NOTES:

QTY REQD	CODE IDENT	PART OR IDENTIFYING NO.	NOMENCLATURE OR DESCRIPTION	ITEM NO.

PARTS LIST

NEXT ASSY	USED ON
APPLICATION	

UNLESS OTHERWISE SPECIFIED DIMENSIONS ARE IN INCHES
TOLERANCES ARE:
FRACTIONS ± DECIMALS .XX ± .XXX ± ANGLES ±

MATERIAL

FINISH

DO NOT SCALE DRAWING

CONTRACT NO.

APPROVALS	DATE
DRAWN DYNA PAC	4-82
CHECKED	5-6-82
MECH	
ELEC	
MFG	
PROJECT	

Gremlin/SEGA
San Diego, California 92123

Switching Regulator

SIZE	CODE IDENT NO.	DRAWING NO.	REV
D		601-0692	A

SCALE NONE SHEET 5 OF 5

601-0692 A

REVISIONS				
ZONE	LTR	DESCRIPTION	DATE	APPROVED

QTY REQD	CODE IDENT	PART OR IDENTIFYING NO.	NOMENCLATURE OR DESCRIPTION	ITEM NO.
PARTS LIST				

UNLESS OTHERWISE SPECIFIED DIMENSIONS ARE IN INCHES
TOLERANCES ARE:
FRACTIONS ± DECIMALS .XX ± .XXX ± ANGLES ±

MATERIAL

FINISH

DO NOT SCALE DRAWING

CONTRACT NO.

APPROVALS	DATE
DRAWN TED DYNA-PAC	
CHECKED	
MECH	
ELEC	
MFG	
PROJECT	

NEXT ASSY | USED ON
APPLICATION

Gremlin/SEGA
San Diego, California 92123

CPU Board

SIZE	CODE IDENT NO.	DRAWING NO.	REV
D		834-5120	

SCALE NONE | SHEET 1 OF 6

REVISIONS				
ZONE	LTR	DESCRIPTION	DATE	APPROVED

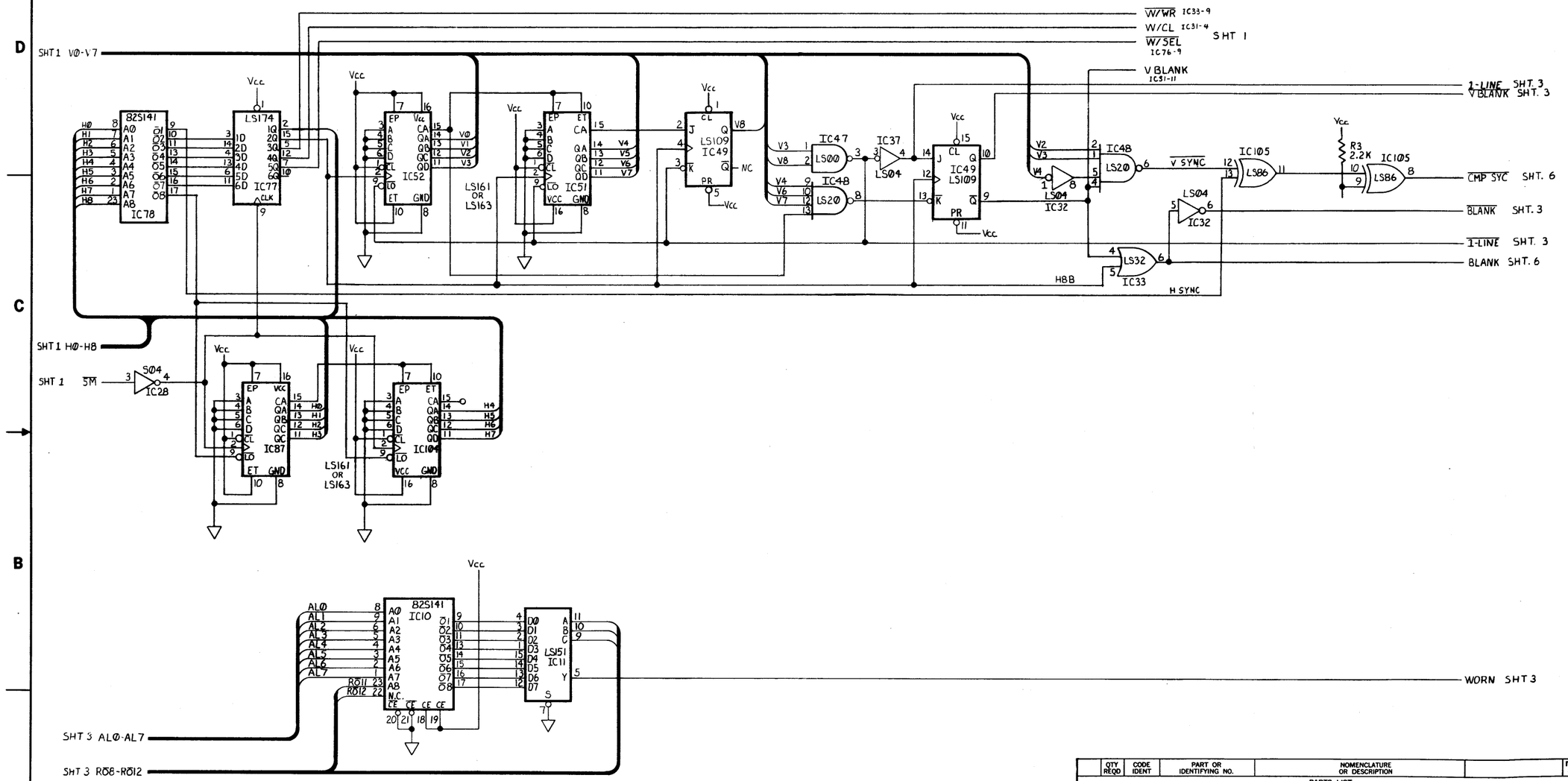

	QTY REQD	CODE IDENT	PART OR IDENTIFYING NO.	NOMENCLATURE OR DESCRIPTION	ITEM NO.
PARTS LIST					

NEXT ASSY	USED ON
APPLICATION	

UNLESS OTHERWISE SPECIFIED DIMENSIONS ARE IN INCHES
TOLERANCES ARE:
FRACTIONS ± DECIMALS .XX ± .XXX ± ANGLES ±

MATERIAL —

FINISH —

DO NOT SCALE DRAWING

CONTRACT NO.

APPROVALS	DATE
DRAWN DYNA PAC ES	1-8-82
CHECKED	
MECH	
ELEC	
MFG	
PROJECT	

Gremlin/SEGA
San Diego, California 92123

CPU Board

SIZE	CODE IDENT NO.	DRAWING NO.	REV
D		834-5120	

SCALE NONE SHEET 2 OF 6

REVISIONS				
ZONE	LTR	DESCRIPTION	DATE	APPROVED

QTY REQD	CODE IDENT	PART OR IDENTIFYING NO.	NOMENCLATURE OR DESCRIPTION	ITEM NO.

PARTS LIST

UNLESS OTHERWISE SPECIFIED DIMENSIONS ARE IN INCHES
TOLERANCES ARE:
FRACTIONS ± DECIMALS .XX ± .XXX ± ANGLES ±

MATERIAL

FINISH

NEXT ASSY | USED ON

APPLICATION

DO NOT SCALE DRAWING

CONTRACT NO.

APPROVALS	DATE
DRAWN DYNA PAC	1-11-83
CHECKED	
MECH	
ELEC	
MFG	
PROJECT	

Gremlin/SEGA
San Diego, California 92123

CPU Board

SIZE D | CODE IDENT NO. | DRAWING NO. 834-5120 | REV

SCALE NONE | SHEET 3 OF 6

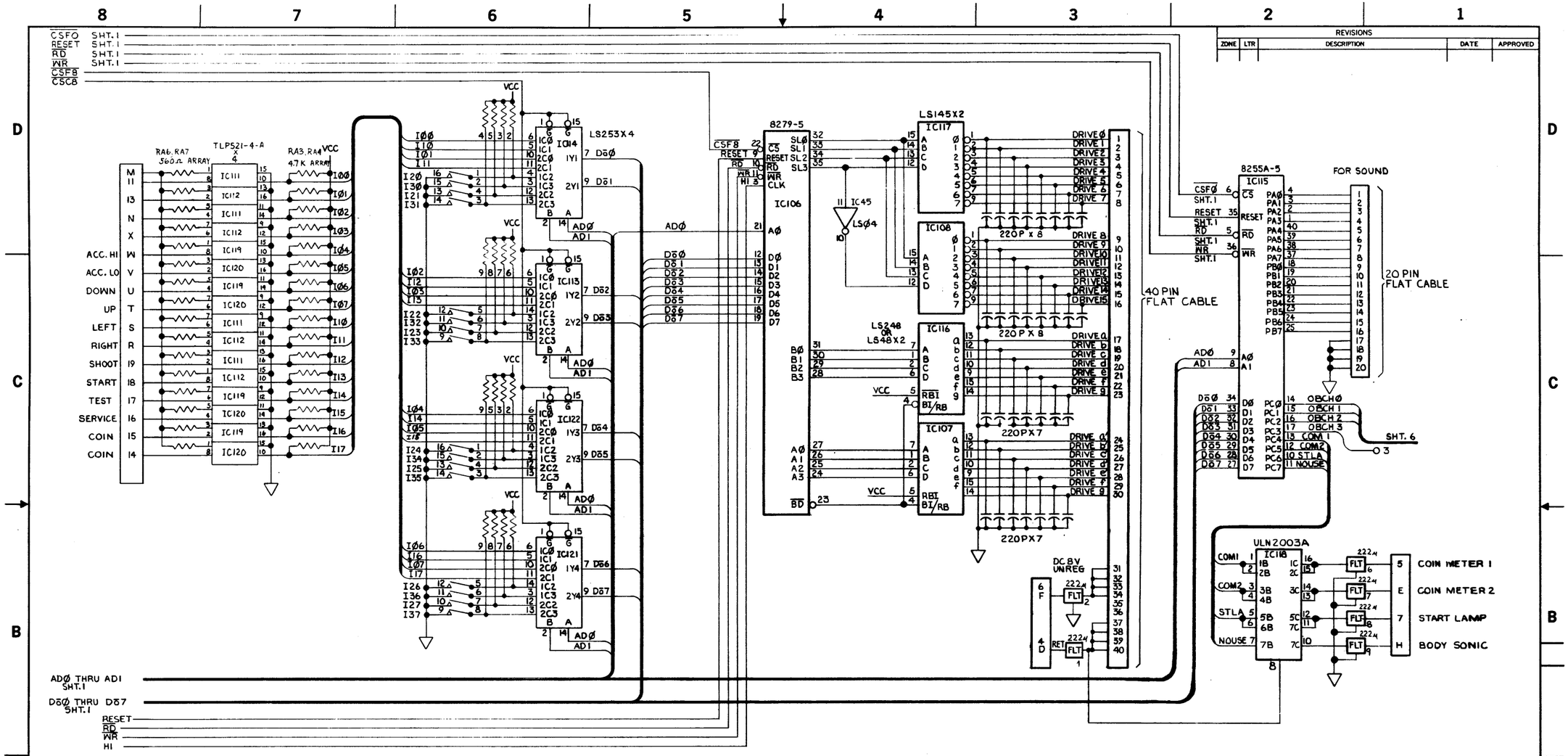

REVISIONS				
ZONE	LTR	DESCRIPTION	DATE	APPROVED

QTY REQD	CODE IDENT	PART OR IDENTIFYING NO.	NOMENCLATURE OR DESCRIPTION	ITEM NO.

PARTS LIST

UNLESS OTHERWISE SPECIFIED DIMENSIONS ARE IN INCHES TOLERANCES ARE:
FRACTIONS ± DECIMALS .XX ± .XXX ± ANGLES ±

MATERIAL

FINISH

DO NOT SCALE DRAWING

CONTRACT NO.

APPROVALS	DATE
DRAWN DYNA-PAC	12-29-82
CHECKED	
MECH	
ELEC	
MFG	
PROJECT	

Gremlin/SEGA
San Diego, California 92123

CPU Board

SIZE	CODE IDENT NO.	DRAWING NO.	REV
D		834-5120	

SCALE NONE SHEET 4 OF 6

NEXT ASSY	USED ON
APPLICATION	

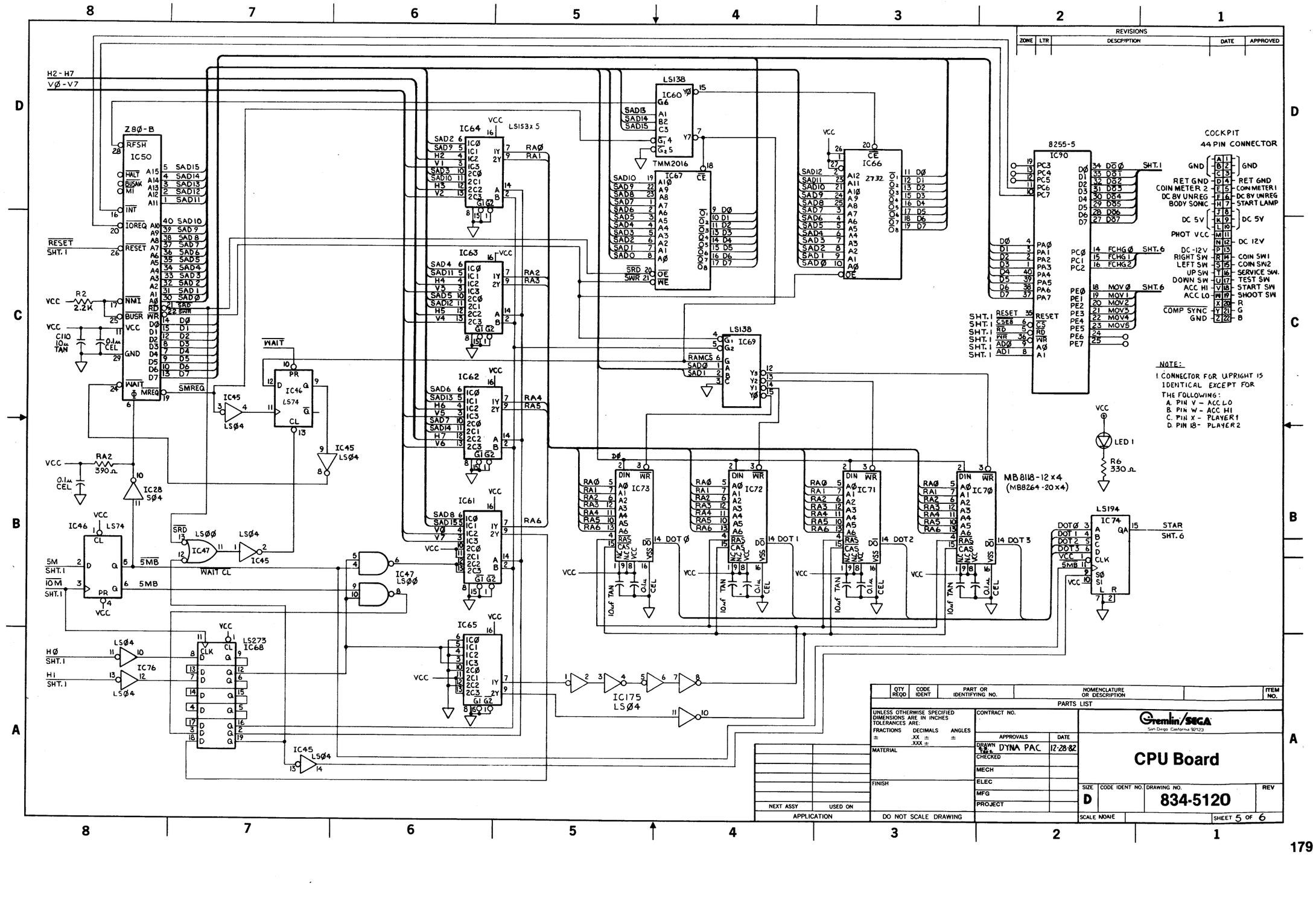

REVISIONS
ZONE
LTR
DESCRIPTION
DATE
APPROVED
H2-H7
VØ-V7
Z8Ø-B
IC50
RFSH
HALT
BUSAK
M1
INT
IOREQ
RESET
NMI
BUSR
VCC
GND
WAIT
MREQ
SMREQ
SAD15
SAD14
SAD13
SAD12
SAD11
SAD10
SAD9
SAD8
SAD7
SAD6
SAD5
SAD4
SAD3
SAD2
SAD1
SADØ
SRD
SWR
DØ
D1
D2
D3
D4
D5
D6
D7
R2
2.2K
C110
10µ
TAN
0.1µ
CEL
IC64
LS153x5
IC63
IC62
IC61
IC65
IC46
LS74
IC45
LSØ4
IC28
SØ4
RA2
390Ω
IC47
LSØØ
WAIT CL
5M
SHT.1
10M
SHT.1
5MB
HØ
SHT.1
H1
SHT.1
IC76
LS273
IC68
IC175
LSØ4
LS138
IC60
TMM2016
IC67
IC66
2732
IC69
RAMCS
IC73
IC72
IC71
IC7Ø
MB8118-12x4
(MB8264-20x4)
DOT Ø
DOT 1
DOT 2
DOT 3
8255-5
IC90
SHT.1
SHT.6
COCKPIT
44 PIN CONNECTOR
GND
RET GND
COIN METER 2
DC 8V UNREG
BODY SONIC
DC 5V
PHOT VCC
DC-12V
RIGHT SW
LEFT SW
UP SW
DOWN SW
ACC HI
ACC LO
COMP SYNC
RET GND
COIN METER 1
DC 8V UNREG
START LAMP
DC 5V
DC 12V
COIN SW1
COIN SW2
SERVICE SW.
TEST SW
START SW
SHOOT SW
R
G
B
NOTE:
1. CONNECTOR FOR UPRIGHT IS IDENTICAL EXCEPT FOR THE FOLLOWING:
A. PIN V - ACC LO
B. PIN W - ACC HI
C. PIN X - PLAYER 1
D. PIN 18 - PLAYER 2
LED 1
R6
330Ω
LS194
IC74
STAR
SHT.6
QTY REQD
CODE IDENT
PART OR IDENTIFYING NO.
NOMENCLATURE OR DESCRIPTION
ITEM NO.
PARTS LIST
UNLESS OTHERWISE SPECIFIED DIMENSIONS ARE IN INCHES TOLERANCES ARE:
FRACTIONS ±
DECIMALS .XX ± .XXX ±
ANGLES ±
MATERIAL
FINISH
CONTRACT NO.
APPROVALS
DATE
DRAWN
DYNA PAC
12-28-82
CHECKED
MECH
ELEC
MFG
PROJECT
Gremlin/SEGA
San Diego California 92123
CPU Board
SIZE
D
CODE IDENT NO.
DRAWING NO.
834-5120
REV
SCALE NONE
SHEET 5 OF 6
NEXT ASSY
USED ON
APPLICATION
DO NOT SCALE DRAWING

REVISIONS				
ZONE	LTR	DESCRIPTION	DATE	APPROVED

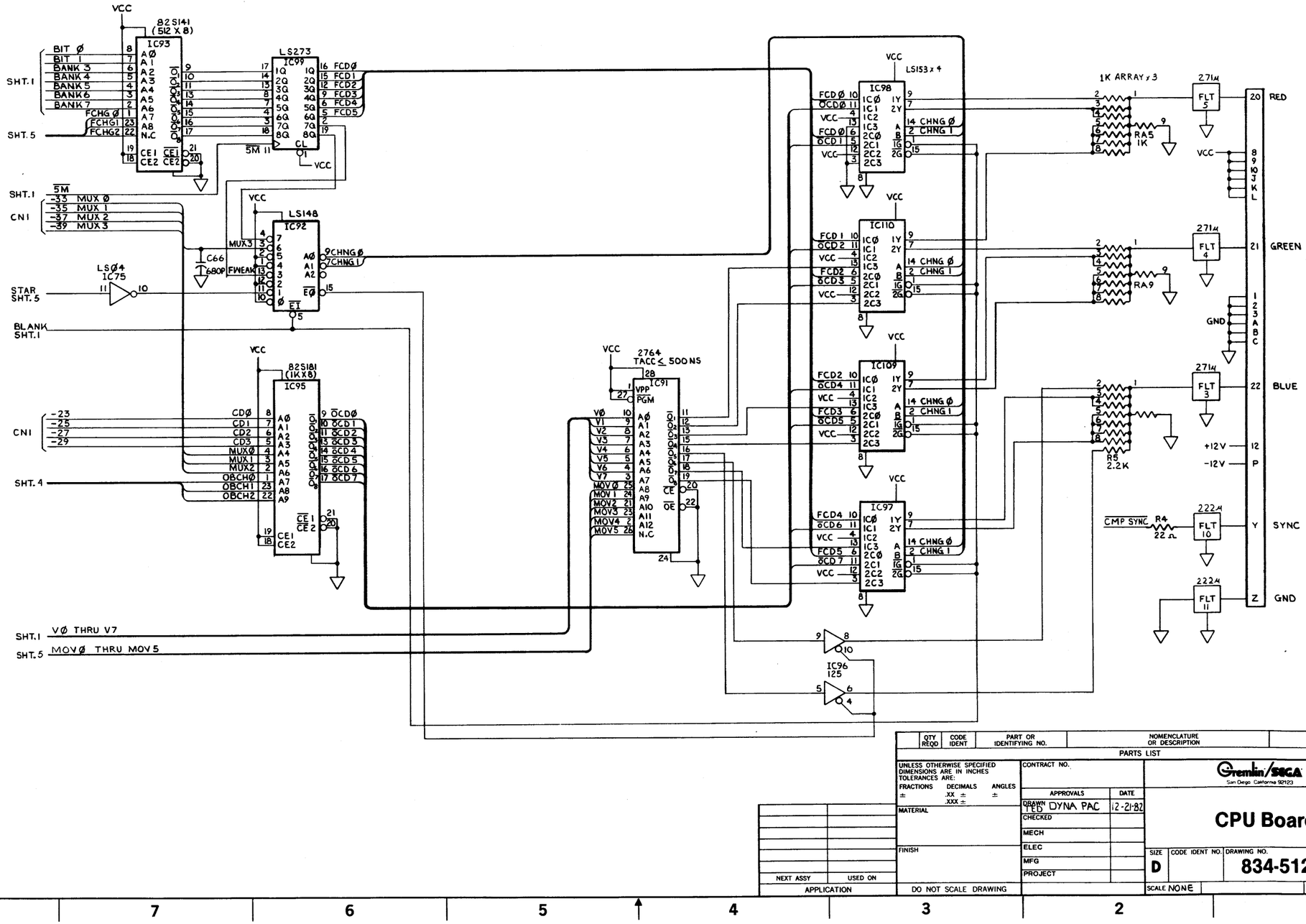

QTY REQD	CODE IDENT	PART OR IDENTIFYING NO.	NOMENCLATURE OR DESCRIPTION	ITEM NO.

PARTS LIST

UNLESS OTHERWISE SPECIFIED DIMENSIONS ARE IN INCHES
TOLERANCES ARE:
FRACTIONS ± DECIMALS .XX ± .XXX ± ANGLES ±

MATERIAL

FINISH

DO NOT SCALE DRAWING

NEXT ASSY | USED ON

APPLICATION

CONTRACT NO.

APPROVALS	DATE
DRAWN TED DYNA PAC	12-21-82
CHECKED	
MECH	
ELEC	
MFG	
PROJECT	

Gremlin/SEGA
San Diego California 92123

CPU Board

SIZE	CODE IDENT NO.	DRAWING NO.	REV
D		834-5120	

SCALE NONE | SHEET 6 OF 6

180

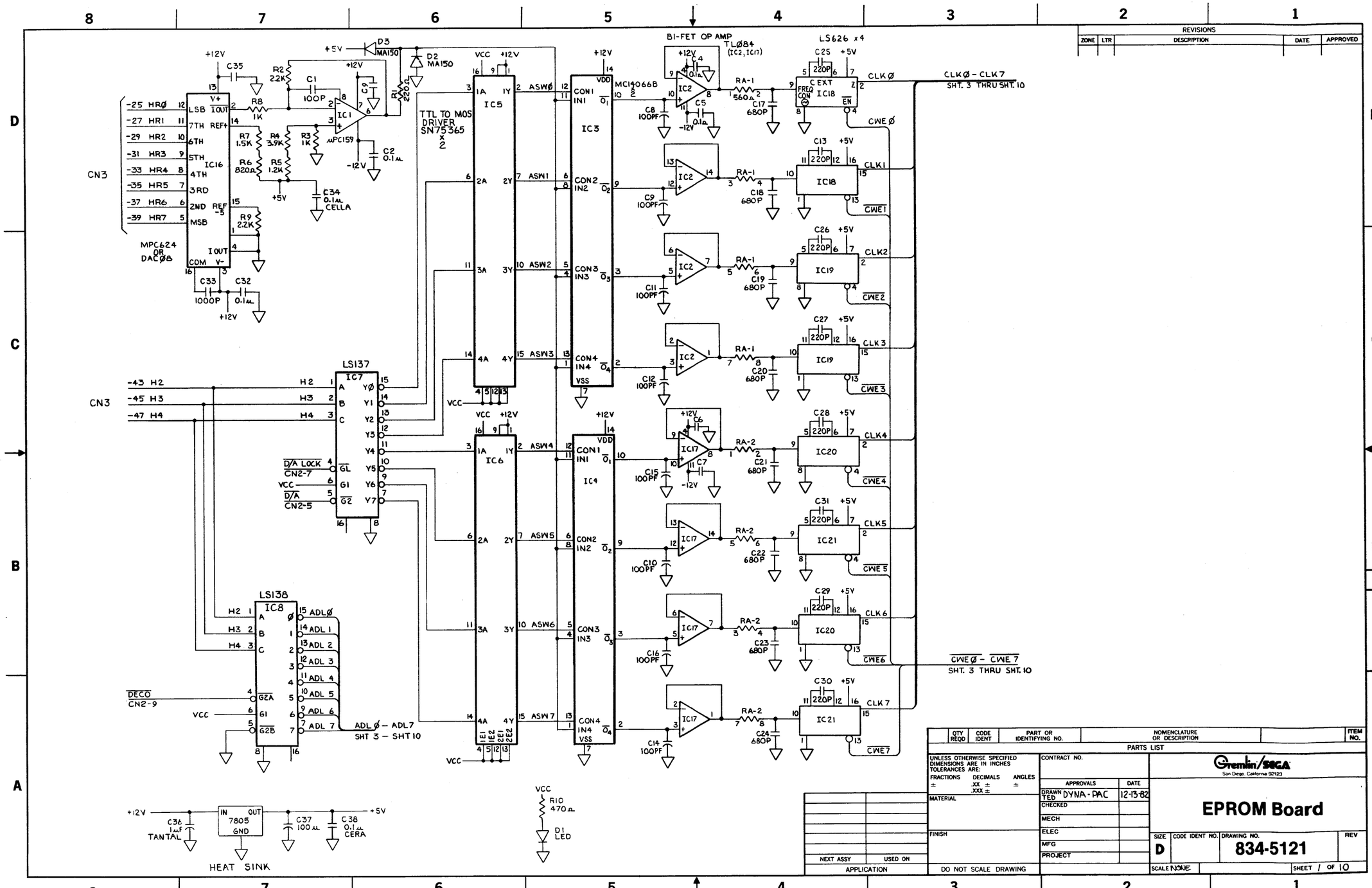

QTY REQD	CODE IDENT	PART OR IDENTIFYING NO.	NOMENCLATURE OR DESCRIPTION	ITEM NO.

PARTS LIST

UNLESS OTHERWISE SPECIFIED DIMENSIONS ARE IN INCHES TOLERANCES ARE:
FRACTIONS ± DECIMALS .XX ± .XXX ± ANGLES ±

MATERIAL

FINISH

DO NOT SCALE DRAWING

CONTRACT NO.

APPROVALS	DATE
DRAWN TED DYNA-PAC	12-13-82
CHECKED	
MECH	
ELEC	
MFG	
PROJECT	

Gremlin/SEGA
San Diego, California 92123

EPROM Board

SIZE D | CODE IDENT NO. | DRAWING NO. 834-5121 | REV

SCALE NONE | SHEET 1 OF 10

NEXT ASSY | USED ON
APPLICATION

REVISIONS				
ZONE	LTR	DESCRIPTION	DATE	APPROVED

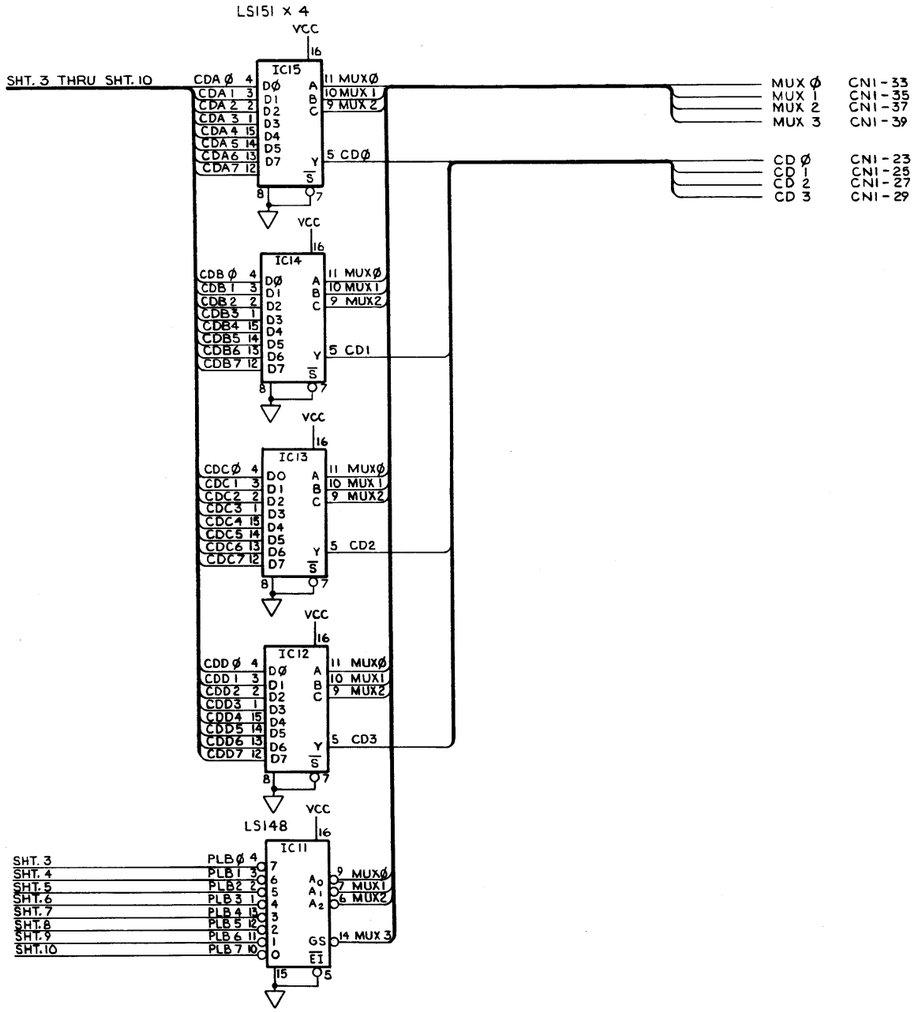

ITEM NO.	NOMENCLATURE OR DESCRIPTION	PART OR IDENTIFYING NO.	CODE IDENT	QTY REQD
	PARTS LIST			

NEXT ASSY	USED ON
APPLICATION	

UNLESS OTHERWISE SPECIFIED DIMENSIONS ARE IN INCHES
TOLERANCES ARE:
FRACTIONS ± DECIMALS .XX ± .XXX ± ANGLES ±

DO NOT SCALE DRAWING

CONTRACT NO.

APPROVALS	DATE
DRAWN TED DYNA PAC	12-15-82
CHECKED	
MECH	
ELEC	
MFG	
PROJECT	

MATERIAL

FINISH

Gremlin/SEGA
San Diego, California 92123

EPROM Board

SIZE	CODE IDENT NO.	DRAWING NO.	REV
D		834-5121	

SCALE NONE SHEET 2 OF 10

182

REVISIONS				
ZONE	LTR	DESCRIPTION	DATE	APPROVED

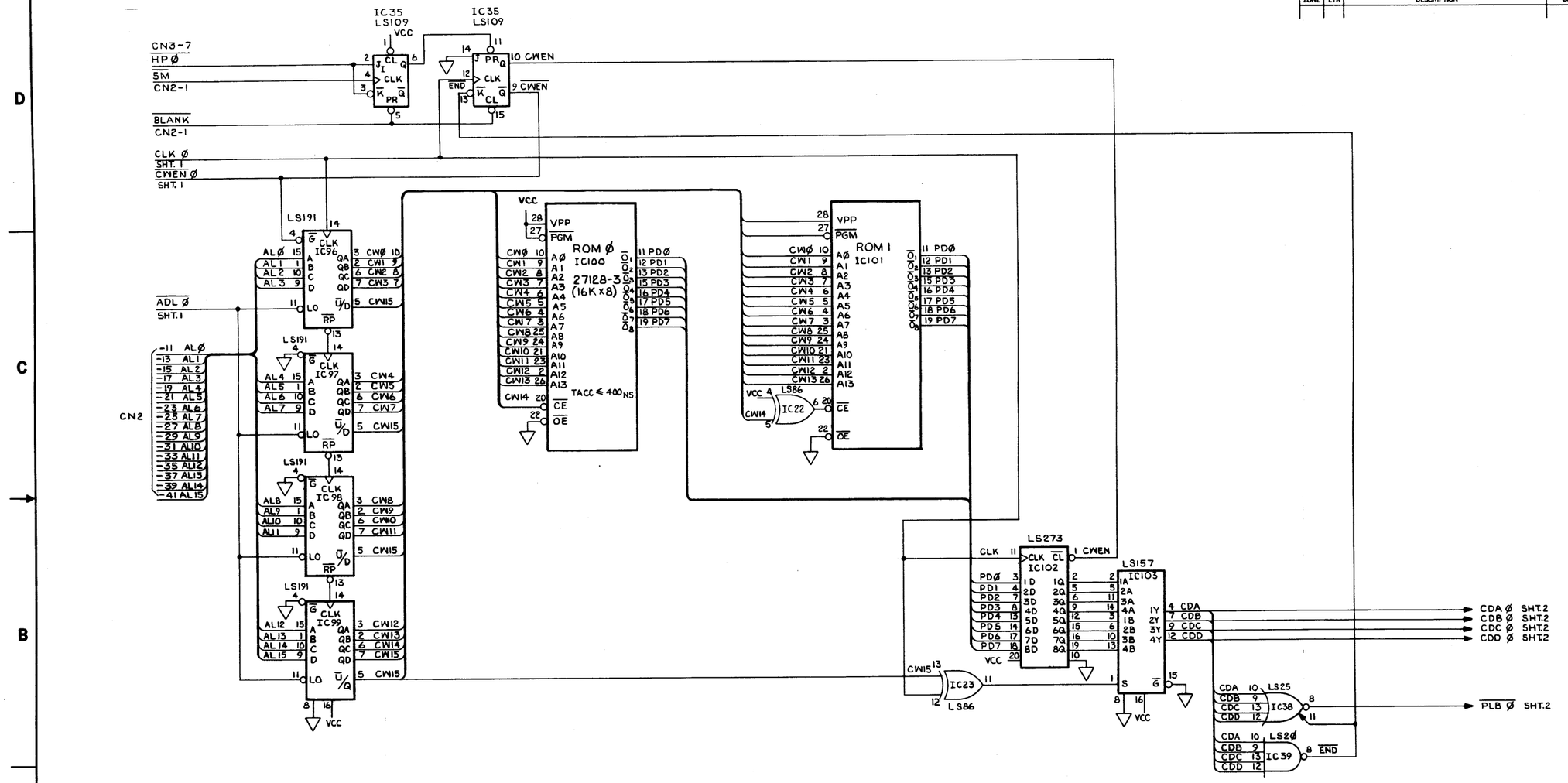

LEVEL Ø

QTY REQD	CODE IDENT	PART OR IDENTIFYING NO.	NOMENCLATURE OR DESCRIPTION		ITEM NO.
PARTS LIST					

UNLESS OTHERWISE SPECIFIED DIMENSIONS ARE IN INCHES
TOLERANCES ARE:
FRACTIONS ± DECIMALS .XX ± .XXX ± ANGLES ±

MATERIAL

FINISH

DO NOT SCALE DRAWING

CONTRACT NO.

APPROVALS	DATE
DRAWN TED DYNA-PAC	12-8-82
CHECKED	
MECH	
ELEC	
MFG	
PROJECT	

NEXT ASSY | USED ON
APPLICATION

Gremlin/SEGA
San Diego, California 92123

EPROM Board

SIZE D | CODE IDENT NO. | DRAWING NO. 834-5121 | REV

SCALE | SHEET 3 OF 10

REVISIONS				
ZONE	LTR	DESCRIPTION	DATE	APPROVED

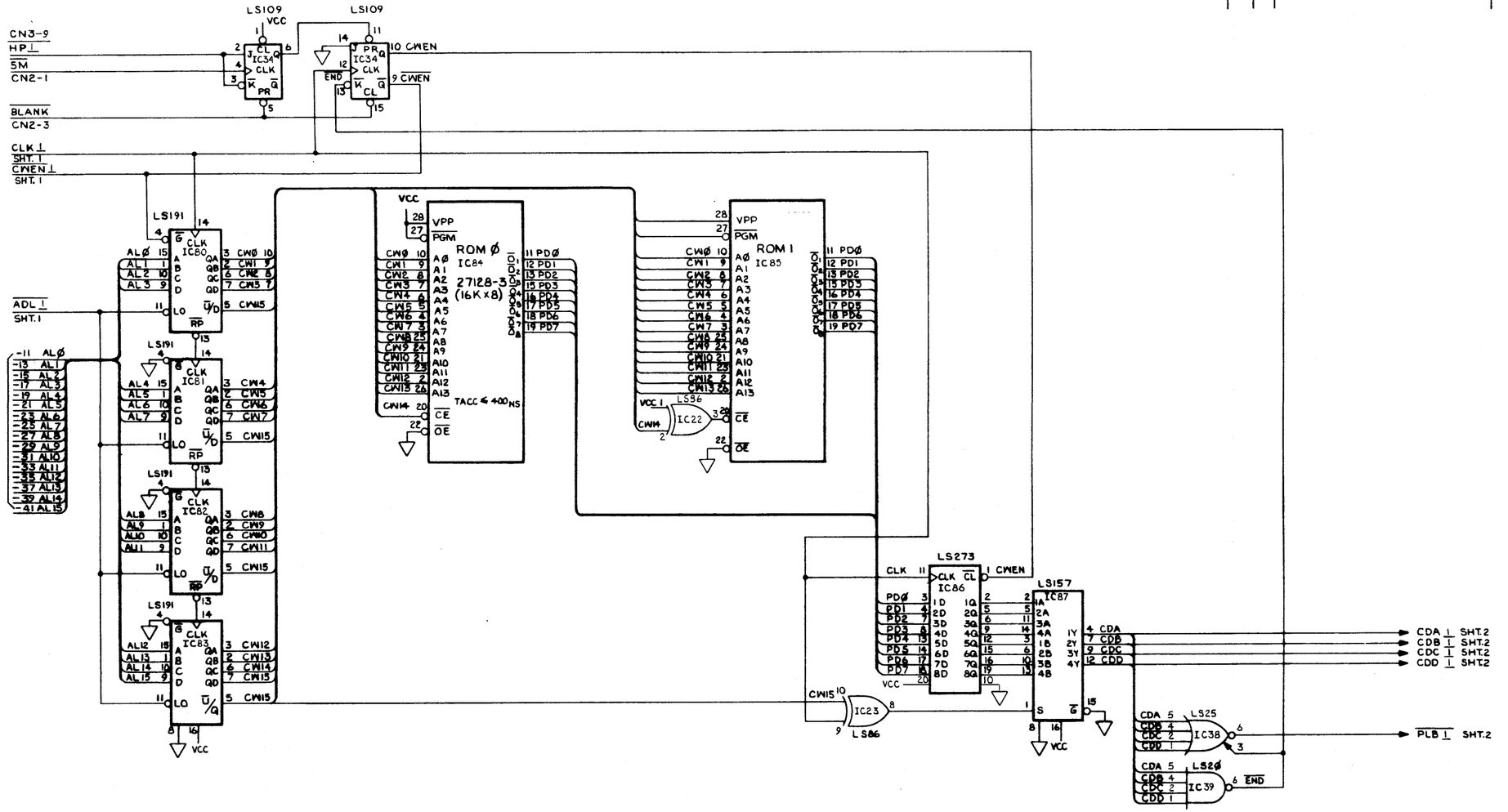

LEVEL 1

QTY REQD	CODE IDENT	PART OR IDENTIFYING NO.	NOMENCLATURE OR DESCRIPTION	ITEM NO.

PARTS LIST

UNLESS OTHERWISE SPECIFIED DIMENSIONS ARE IN INCHES
TOLERANCES ARE:
FRACTIONS ± | DECIMALS .XX ± .XXX ± | ANGLES ±

MATERIAL

FINISH

DO NOT SCALE DRAWING

CONTRACT NO.

APPROVALS	DATE
DRAWN TED DYNA-PAC	12-8-82
CHECKED	
MECH	
ELEC	
MFG	
PROJECT	

Gremlin/SEGA
San Diego, California

EPROM Board

SIZE	CODE IDENT NO.	DRAWING NO.	REV
D		834-5121	

SCALE | SHEET 4 OF 10

NEXT ASSY	USED ON
APPLICATION	

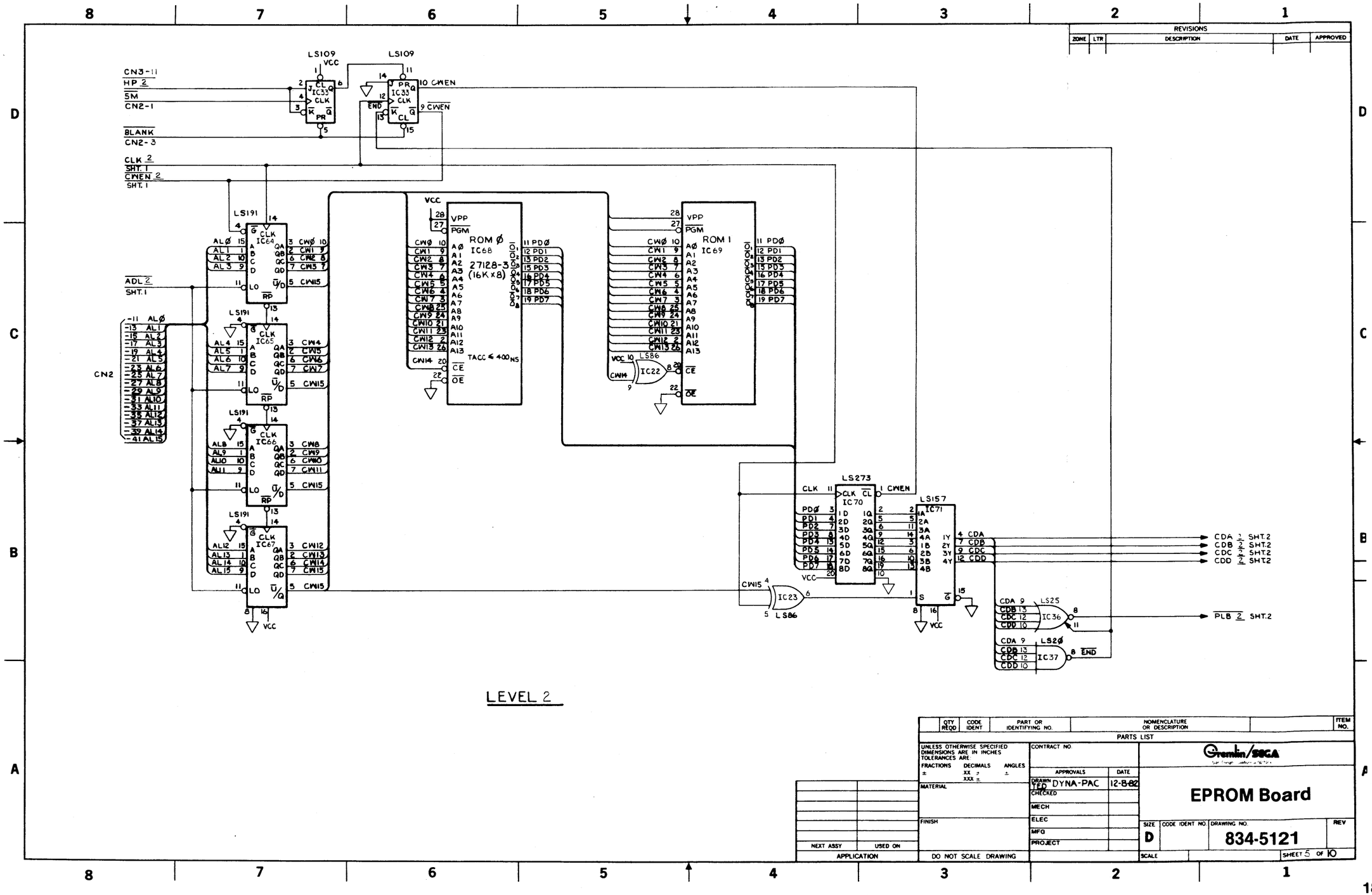

LS109
VCC
CN3-11
HP 2
SM
CN2-1
BLANK
CN2-3
CLK 2
SHT. 1
CWEN 2
SHT. 1
ADL 2
SHT. 1
CN2
LS191
IC64
IC65
IC66
IC67
ROM Ø
IC68
27128-3
(16K x 8)
TACC ≤ 400NS
ROM 1
IC69
LS86
IC22
LS273
IC70
LS157
IC71
IC23
LS25
IC36
LS2Ø
IC37
CDA 2 SHT.2
CDB 2 SHT.2
CDC 2 SHT.2
CDD 2 SHT.2
PLB 2 SHT.2
LEVEL 2
REVISIONS
ZONE
LTR
DESCRIPTION
DATE
APPROVED
QTY REQD
CODE IDENT
PART OR IDENTIFYING NO.
NOMENCLATURE OR DESCRIPTION
ITEM NO.
PARTS LIST
UNLESS OTHERWISE SPECIFIED DIMENSIONS ARE IN INCHES TOLERANCES ARE:
FRACTIONS ±
DECIMALS XX ± XXX ±
ANGLES ±
MATERIAL
FINISH
CONTRACT NO.
APPROVALS
DATE
DRAWN TED DYNA-PAC 12-8-82
CHECKED
MECH
ELEC
MFG
PROJECT
Gremlin/SEGA
EPROM Board
SIZE D
CODE IDENT NO.
DRAWING NO. 834-5121
REV
SCALE
SHEET 5 OF 10
NEXT ASSY
USED ON
APPLICATION
DO NOT SCALE DRAWING

REVISIONS				
ZONE	LTR	DESCRIPTION	DATE	APPROVED

LEVEL 3

QTY REQD	CODE IDENT	PART OR IDENTIFYING NO.	NOMENCLATURE OR DESCRIPTION	ITEM NO.

PARTS LIST

UNLESS OTHERWISE SPECIFIED DIMENSIONS ARE IN INCHES
TOLERANCES ARE:
FRACTIONS ± DECIMALS XX ± XXX ± ANGLES ±

MATERIAL

FINISH

DO NOT SCALE DRAWING

CONTRACT NO

APPROVALS	DATE
DRAWN TED DYNA-PAC	12-8-82
CHECKED	
MECH	
ELEC	
MFG	
PROJECT	

NEXT ASSY | USED ON

APPLICATION

Gremlin/SEGA

EPROM Board

SIZE	CODE IDENT NO	DRAWING NO	REV
D		834-5121	

SCALE

SHEET 6 OF 10

REVISIONS				
ZONE	LTR	DESCRIPTION	DATE	APPROVED

LEVEL 4

QTY REQD	CODE IDENT	PART OR IDENTIFYING NO.	NOMENCLATURE OR DESCRIPTION	ITEM NO.

PARTS LIST

UNLESS OTHERWISE SPECIFIED DIMENSIONS ARE IN INCHES
TOLERANCES ARE:
FRACTIONS ± DECIMALS .XX ± .XXX ± ANGLES ±

MATERIAL

FINISH

NEXT ASSY | USED ON

APPLICATION

DO NOT SCALE DRAWING

CONTRACT NO.

APPROVALS	DATE
DRAWN TED DYNA-PAC	12-8-82
CHECKED	
MECH	
ELEC	
MFG	
PROJECT	

Gremlin/SEGA
San Diego, California 92123

EPROM Board

SIZE D | CODE IDENT NO. | DRAWING NO. 834-5121 | REV

SCALE | SHEET 7 OF 10

REVISIONS				
ZONE	LTR	DESCRIPTION	DATE	APPROVED

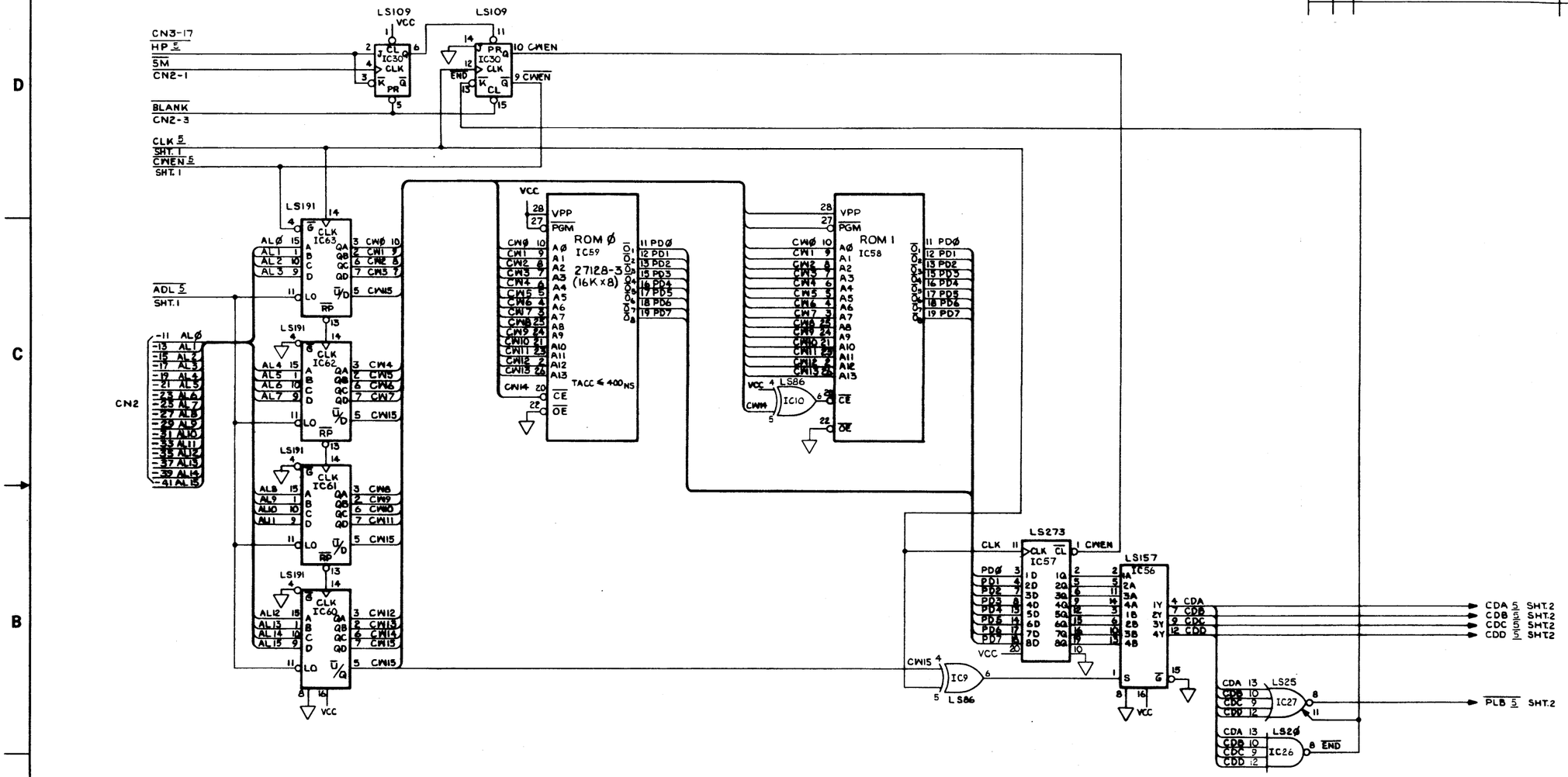

QTY REQD	CODE IDENT	PART OR IDENTIFYING NO.	NOMENCLATURE OR DESCRIPTION	ITEM NO.
			PARTS LIST	

UNLESS OTHERWISE SPECIFIED DIMENSIONS ARE IN INCHES
TOLERANCES ARE:
FRACTIONS ± DECIMALS .XX ± .XXX ± ANGLES ±

MATERIAL

FINISH

DO NOT SCALE DRAWING

CONTRACT NO.

APPROVALS	DATE
DRAWN TED DYNA-PAC	12-8-82
CHECKED	
MECH	
ELEC	
MFG	
PROJECT	

Gremlin/SEGA
San Diego, California 92123

EPROM Board

SIZE	CODE IDENT NO.	DRAWING NO.	REV
D		834-5121	

SCALE

SHEET 8 OF 10

NEXT ASSY	USED ON

APPLICATION

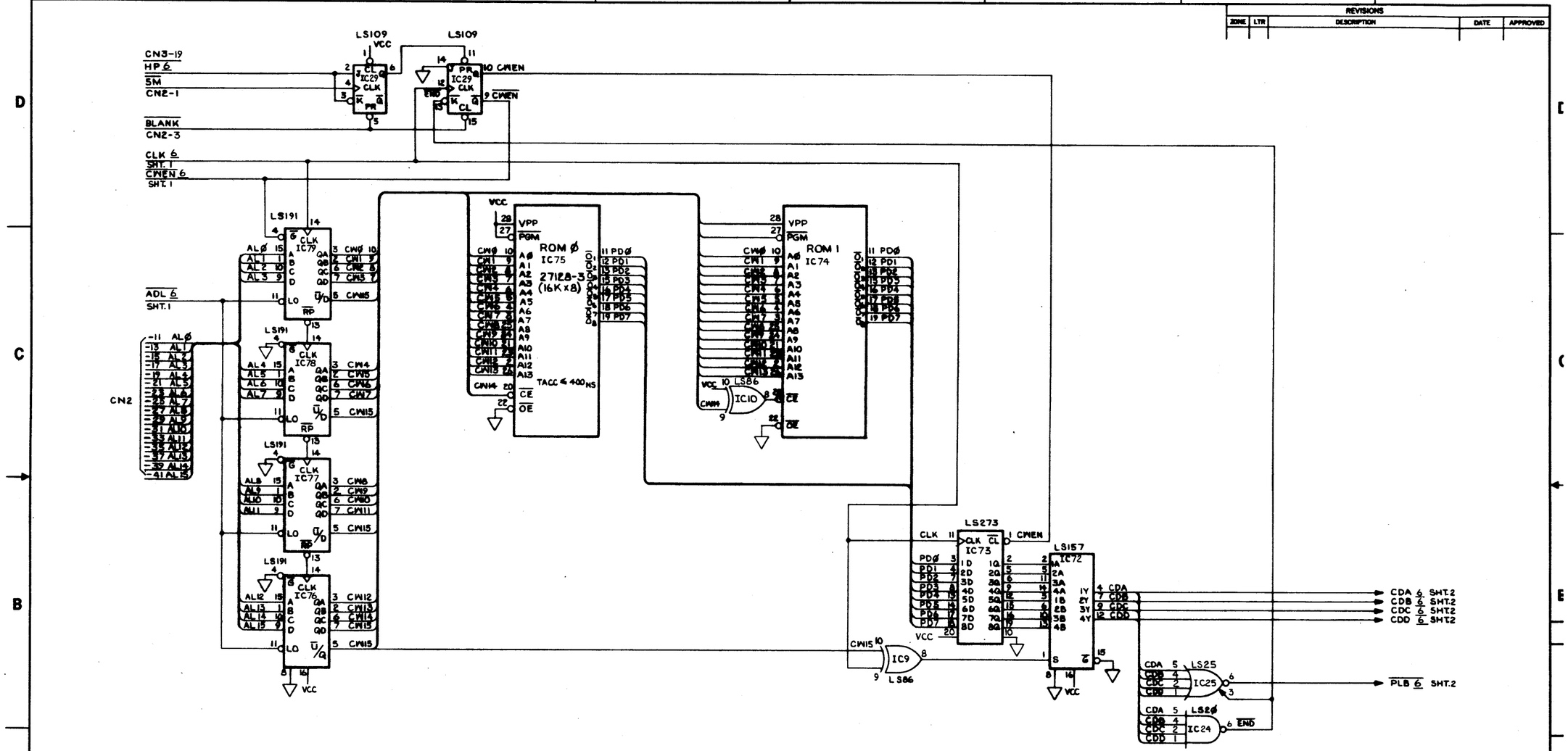

REVISIONS				
ZONE	LTR	DESCRIPTION	DATE	APPROVED

QTY REQD	CODE IDENT	PART OR IDENTIFYING NO.	NOMENCLATURE OR DESCRIPTION	ITEM NO.

PARTS LIST

UNLESS OTHERWISE SPECIFIED DIMENSIONS ARE IN INCHES
TOLERANCES ARE:
FRACTIONS ± | DECIMALS .XX ± .XXX ± | ANGLES ±

MATERIAL

FINISH

NEXT ASSY | USED ON

APPLICATION

DO NOT SCALE DRAWING

CONTRACT NO.

APPROVALS	DATE
DRAWN TED DYNA-PAC	12-8-82
CHECKED	
MECH	
ELEC	
MFG	
PROJECT	

Franklin/DGCA
San Diego California 92123

EPROM Board

SIZE	CODE IDENT NO.	DRAWING NO.	REV
D		834-5121	

SCALE | SHEET 9 OF 10

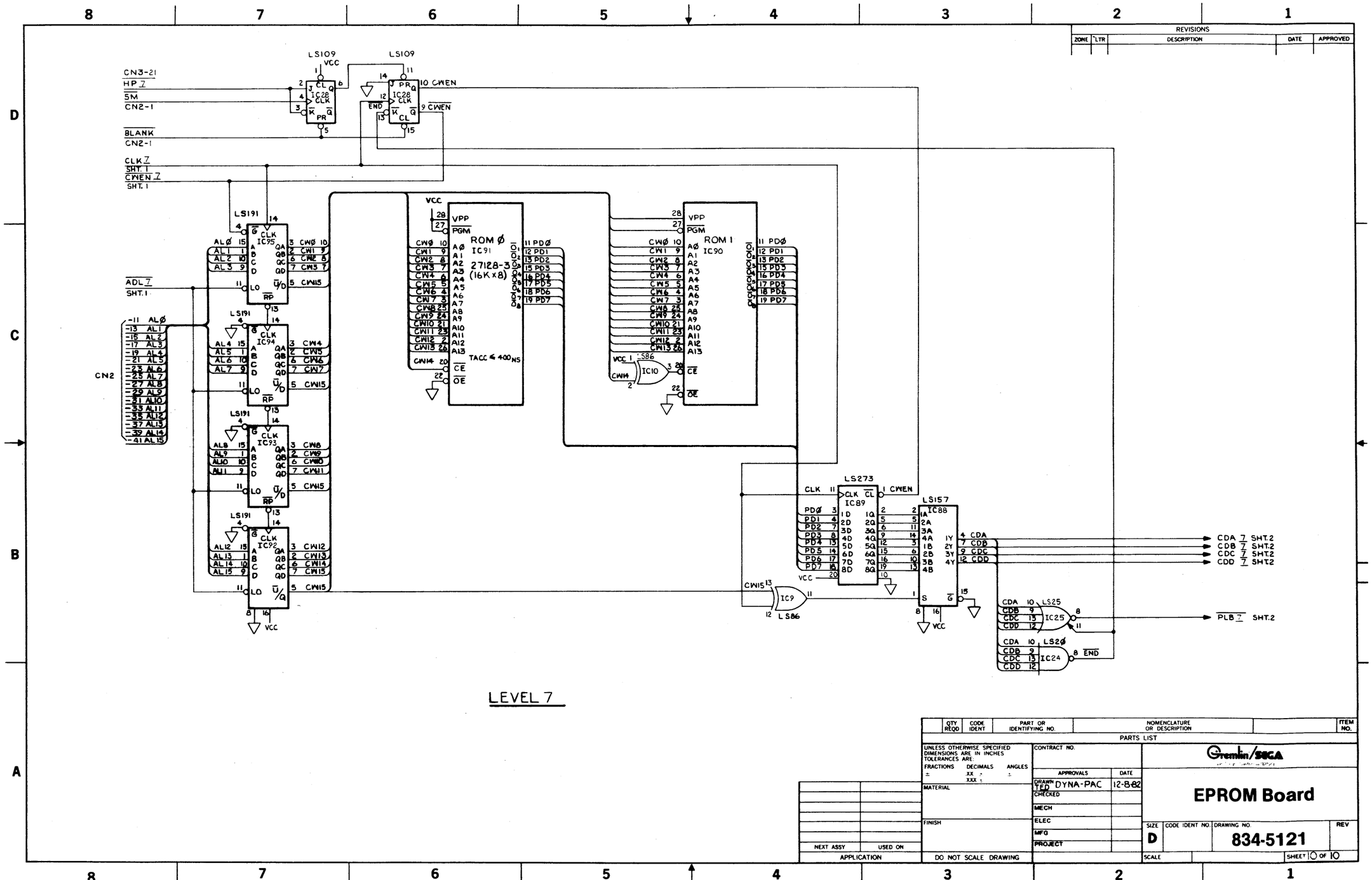

LEVEL 7
CN3-21
HP 7
5M
CN2-1
BLANK
CN2-1
CLK 7
SHT. 1
CWEN 7
SHT. 1
ADL 7
SHT. 1
CN2
LS109
IC28
LS191
IC95
IC94
IC93
IC92
ROM Ø
IC91
27128-3
(16K x 8)
TACC ≤ 400NS
ROM 1
IC90
LS86
IC10
LS273
IC89
LS157
IC88
IC9
LS25
IC25
LS2Ø
IC24
CDA 7 SHT.2
CDB 7 SHT.2
CDC 7 SHT.2
CDD 7 SHT.2
PLB 7 SHT.2
REVISIONS
ZONE
LTR
DESCRIPTION
DATE
APPROVED
QTY REQD
CODE IDENT
PART OR IDENTIFYING NO.
NOMENCLATURE OR DESCRIPTION
ITEM NO.
PARTS LIST
UNLESS OTHERWISE SPECIFIED DIMENSIONS ARE IN INCHES TOLERANCES ARE:
FRACTIONS ±
DECIMALS XX ± XXX ±
ANGLES ±
MATERIAL
FINISH
CONTRACT NO.
APPROVALS
DATE
DRAWN TED DYNA-PAC 12-8-82
CHECKED
MECH
ELEC
MFG
PROJECT
Gremlin/SEGA
EPROM Board
SIZE D
CODE IDENT NO.
DRAWING NO. 834-5121
REV
SCALE
SHEET 10 OF 10
NEXT ASSY
USED ON
APPLICATION
DO NOT SCALE DRAWING

REVISIONS				
ZONE	LTR	DESCRIPTION	DATE	APPROVED

FAP-20-07
20 P
FLAT CABLE

HIT DIS Ø
HIT DIS 1
HIT DIS 2
HIT (SHT. 2)

ACC Ø
ACC 1
ACC 2
ACC 3
MY SHIP (SHT. 1)

ALARM 0
ALARM 1
ALARM 2
ALARM 3
FIRE
(SHT. 3)

EXP
HIT
REBOUND
(SHT. 2)

SHIP ON
GAME ON
(SHT. 1)

SHIP MIX (SHT. 1)

MY SHIP (SHT. 1)
ACC Ø
ACC 1
ACC 2
ACC 3
SHIP ON (SHT. 1)
(SHT. 1) SHIP MIX
(SHT. 2) HIT MIX
(SHT. 3) FIRE MIX
(SHT. 2) EXP. MIX
(SHT. 2) REBOUND MIX
(SHT. 3) ALARM MIX
(SHT. 1) GAME ON

WITH HEAT SINK

QTY REQD	CODE IDENT	PART OR IDENTIFYING NO.	NOMENCLATURE OR DESCRIPTION	ITEM NO.
PARTS LIST				

UNLESS OTHERWISE SPECIFIED DIMENSIONS ARE IN INCHES
TOLERANCES ARE:
FRACTIONS ± DECIMALS .XX ± .XXX ± ANGLES ±
MATERIAL
FINISH
NEXT ASSY | USED ON
APPLICATION
DO NOT SCALE DRAWING

CONTRACT NO.

APPROVALS	DATE
DRAWN DYNA-PAC	12-9-82
CHECKED	
MECH	
ELEC	
MFG	
PROJECT	

Gremlin/SEGA

Sound Board

SIZE	CODE IDENT NO.	DRAWING NO.	REV
D		834-5122	

SCALE ~ SHEET 1 OF 3

REVISIONS				
ZONE	LTR	DESCRIPTION	DATE	APPROVED

NOISE · B (SHT. 3)

HIT (SHT. 1)

HIT DIS Ø

HIT DIS 1

HIT DIS 2

HIT MIX (SHT. 1)

EXP (SHT. 1)

(SHT. 3) NOISE · B

EXP. MIX (SHT. 1)

NOISE·A (SHT. 3)

REBOUND (SHT. 1)

REBOUND MIX (SHT. 1)

QTY. REQD	CODE IDENT	PART OR IDENTIFYING NO.	NOMENCLATURE OR DESCRIPTION	ITEM NO.

PARTS LIST

UNLESS OTHERWISE SPECIFIED DIMENSIONS ARE IN INCHES
TOLERANCES ARE:
FRACTIONS ± DECIMALS .XX ± .XXX ± ANGLES ±

MATERIAL

FINISH

NEXT ASSY | USED ON

APPLICATION

DO NOT SCALE DRAWING

CONTRACT NO.

APPROVALS	DATE
DRAWN DYNA-PAC	12-15-82
CHECKED	
MECH	
ELEC	
MFG	
PROJECT	

Gremlin/SEGA

Sound Board

SIZE	CODE IDENT NO.	DRAWING NO.	REV
D		834-5122	

SCALE ~ SHEET 2 OF 3

REVISIONS				
ZONE	LTR	DESCRIPTION	DATE	APPROVED

NOISE · A (SHT. 3)

FIRE (SHT. 1)

ALARM Ø (SHT. 1)

ALARM 1 (SHT. 1)

ALARM 2 (SHT. 1)

ALARM 3 (SHT. 1)

FIRE MIX (SHT. 1)

ALARM MIX (SHT. 1)

NOISE · A (SHT. 2 & 3)

NOISE · B (SHT. 2)

QTY REQD	CODE IDENT	PART OR IDENTIFYING NO.	NOMENCLATURE OR DESCRIPTION	ITEM NO.

PARTS LIST

UNLESS OTHERWISE SPECIFIED DIMENSIONS ARE IN INCHES
TOLERANCES ARE:
FRACTIONS ± DECIMALS .XX ± .XXX ± ANGLES ±

MATERIAL

FINISH

DO NOT SCALE DRAWING

NEXT ASSY | USED ON

APPLICATION

CONTRACT NO.

APPROVALS	DATE
DRAWN DYNA-PAC 8.8.	12-16-82
CHECKED	
MECH	
ELEC	
MFG	
PROJECT	

Gremlin/SEGA
San Diego, California 92123

Sound Board

SIZE	CODE IDENT NO.	DRAWING NO.	REV
D		834-5122	

SCALE ~ SHEET 3 OF 3