Lexmark T522

User's Reference

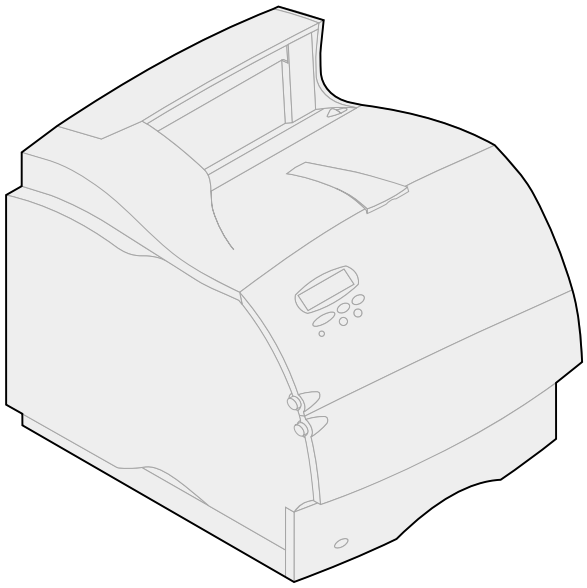

May 2001

www.lexmark.com

Table of contents

Chapter 1: Printer overview 7

Chapter 2: Using the operator panel 8

Understanding the operator panel 8

Using the operator panel buttons 9

Using the operator panel to change printer settings 10

Printing the menu settings page 11

Chapter 3: Using the Print and Hold function 12

Printing and deleting held jobs 12

Accessing held jobs from the operator panel 13

Recognizing when format errors occur 13

Repeat Print 14

Reserve Print 14

Verify Print 14

Confidential jobs 14

Chapter 4: Canceling a print job 16

Chapter 5: Printing folio and statement size paper 17

Chapter 6: Choosing print material 18

Paper characteristics 18

Weight 18

Curl 19

Smoothness 19

Moisture content 19

Grain direction 19

Fiber content 19

Recommended paper 19

Unacceptable paper 20

Choosing preprinted forms and letterhead 20

Choosing prepunched paper 20
Choosing paper 21
Choosing envelopes 22
Choosing labels 22
Choosing card stock 23
Choosing transparencies 24

Chapter 7: Print material specifications 25

Chapter 8: Loading print material 29

Chapter 9: Loading a paper tray 30

Loading letterhead 31

Chapter 10: Loading the multipurpose feeder 32

Capacity 32
Paper dimensions 32
Trouble-free printing 32
Loading paper and transparencies 36
Loading envelopes 36
Loading letterhead 37
Closing the multipurpose feeder 39

Chapter 11: Loading the envelope feeder 40

Chapter 12: Loading the 2000-sheet drawer 44

Chapter 13: Storing paper 45

Chapter 14: Tray linking 46

Chapter 15: Tips for avoiding paper jams 47

Chapter 16: Replacing the print cartridge 48

Chapter 17: Replacing the charge roll 49

Chapter 18: Replacing the transfer roll 50

Chapter 19: Replacing the fuser assembly 51

Chapter 20: Resetting the maintenance counter 52

Chapter 21: Ordering supplies 53

Maintenance kit 53
Print cartridges 53
Label fuser cleaner 53
Charge roll 53
Transfer roll 54
Fuser assembly 54

Chapter 22: Storing supplies 55

Chapter 23: Checking an unresponsive printer 56

Chapter 24: Clearing paper jams 57

Identifying paper jam areas 57
Accessing paper jam areas 59

200 and 201 Paper Jam

Remove Cartridge 59

202 Paper Jam

Open Rear Door 60

Before reaching the output bin 61
While exiting to the output bin 62

230 Paper Jam

Check Duplex 63

24x Paper Jam

Check Tray x 66

On the incline surface of a tray or between two trays 66
Between three trays 67
Between a tray, the duplex unit, and the integrated tray 68
In the 2000-sheet drawer 70

250 Paper Jam

Check MP Feeder 71

260 Paper Jam

Check Env Feeder 71

At entry into the envelope feeder 71
Between the envelope feeder and the printer 72

Chapter 25: Solving display problems 74

Chapter 26: Solving printing problems 75

Chapter 27: Solving print quality problems 77

Chapter 28: Solving option problems 80

Chapter 29: Solving network printing problems 82

Chapter 30: Resolving other problems and questions 83

Chapter 31: Understanding printer messages 84

Chapter 32: Using printer menus 116

Chapter 33: Finishing Menu 119

Chapter 34: Infrared Menu 125

Chapter 35: Job Menu 130

Chapter 36: LocalTalk Menu 133

Chapter 37: Network Menu 137

Chapter 38: Paper Menu 141

Chapter 39: PCL Emul Menu 149

Chapter 40: Parallel Menu 154

Chapter 41: PostScript Menu 159

Chapter 42: Quality Menu 160

Chapter 43: Serial Menu 162

Chapter 44: Setup Menu 168

Chapter 45: Utilities Menu 174

Chapter 46: USB Menu 178

Chapter 47: Disabling operator panel menus 181

Chapter 48: Removing options 182

Chapter 49: Removing the envelope feeder 183

Chapter 50: Removing a paper tray or duplex unit 185

Chapter 51: Removing printer or flash memory 187

Chapter 52: Removing an option card 188

Chapter 53: Understanding fonts 189

Typefaces and fonts 189
Weight and style 189
Pitch and point size 189
Bitmapped and scalable fonts 191
Resident fonts 192
Symbol sets 197
Symbol sets for PCL 6 emulation 197
Downloadable fonts 198
Printing a font sample list 198

Chapter 54: Printer specifications 199

Dimensions 199
Duty cycle 199

Notices 200

Edition notice 201
Trademarks 201
Licensing notice 202
Safety information 203
Cautions and warnings 203
Electronic emission notices 203
With a network cable attached 203
Without a network cable attached 204
The United Kingdom Telecommunications Act 1984 205
Energy Star 205
Laser notices 206
Laser advisory label 206
Laser notice 206

Index 207

1 Printer overview

The following illustrations show a standard network model configuration and a fully configured printer. If you have attached paper handling options to your printer, it may look more like the fully configured model. For information on other possible configurations, refer to the *Setup Guide*.

Standard network model configuration

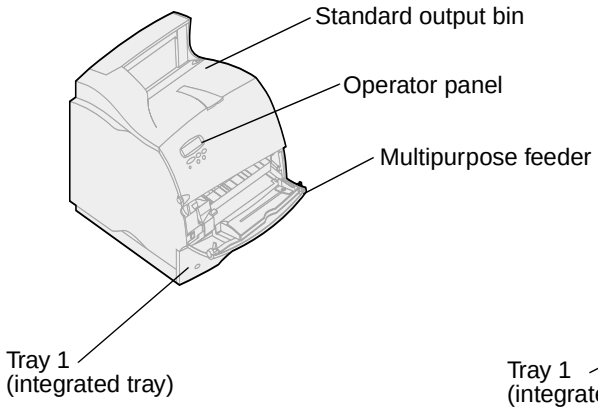

Fully configured

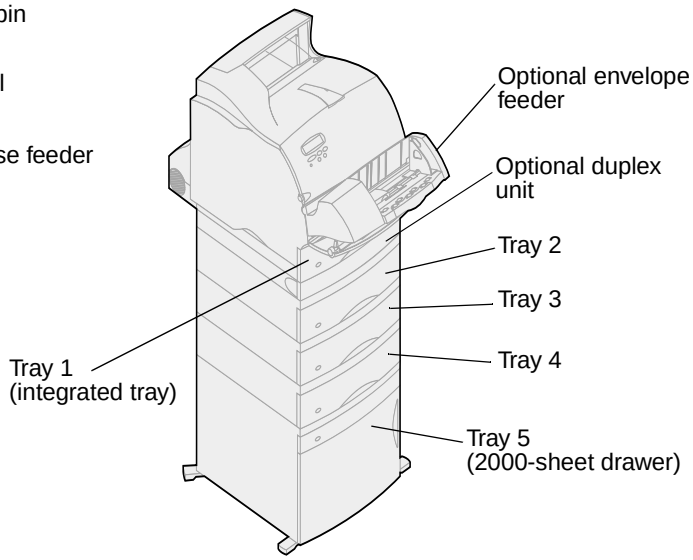

2 Using the operator panel

This section contains information about understanding the operator panel, changing printer settings, and understanding operator panel menus.

You can change most printer settings from your software application or printer driver. Settings you change from the application or printer driver apply only to the job you are preparing to send to the printer.

Changes made to printer settings from a software application override changes made from the printer operator panel.

If you cannot change a setting from your application, use the printer operator panel or the remote operator panel available from MarkVision™. Changing a printer setting from the printer operator panel or from MarkVision makes that setting the user default.

Understanding the operator panel

The printer operator panel has a 2-line by 16-character liquid crystal display (LCD), five buttons, and one indicator light.

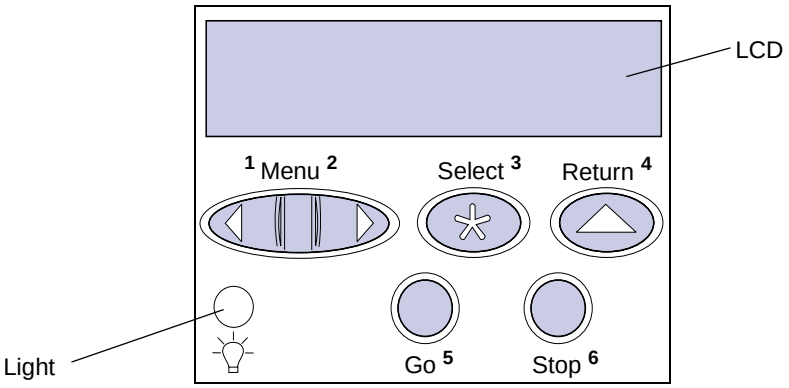

Indicator light

The indicator light gives information about the status of your printer. If the light is:

- Off, the printer is off
- On, the printer is on, but idle
- Blinking, the printer is on and is busy

Using the operator panel buttons

Use the five operator panel buttons to open a menu, scroll through a list of values, change printer settings, and respond to printer messages.

The numbers 1 through 6 appear beside the operator panel buttons; these numbers are used to enter personal identification numbers (PIN) for *Print and Hold* jobs. For more information, see **Using the Print and Hold function**.

The following information describes the functions of each button.

Note: Buttons act upon the information displayed on the second line of the operator panel.

Go	Press the **Go** button to: • Return to the Ready state if the printer is in an offline situation (the **Ready** message does not appear on the display). • Exit printer menus and return to the Ready state. • Clear operator panel error messages. If you've changed printer settings from the operator panel menus, press **Go** before sending a job to print. The printer must display **Ready** for jobs to print.
Menu	Each end of the button has a function. Press **Menu**: • When **Ready** is displayed, to take the printer offline (out of the **Ready** state) and scroll through the menus. • When **Busy** is displa • yed, to take the printer to the Job Menu. • When the printer is offline, press **Menu>** to scroll through the menus. – Press **<Menu** to go to the previous item in the menus. For menu items with numeric values, such as Copies, press and hold **Menu** to scroll through the values. Release the button when the number you want is displayed.
Select	Press **Select** to: • Select the menu displayed on the second line of the display. Depending on the type of menu, this action: – Opens the menu and shows the first item in the menu. – Opens the menu item and shows the default setting. • Save the displayed menu item as the default setting. The printer shows the **Saved** message and returns to the menu item. • Clear certain messages from the operator panel.
Return	Press **Return** to return to the previous menu level or menu item.
Stop	Press **Stop** at the **Ready**, **Busy**, or **Waiting** message to temporarily stop all activity and take the printer offline. The operator panel status message changes to **Not Ready**. Press **Go** to return the printer to the **Ready**, **Busy**, or **Waiting** State.

Using the operator panel to change printer settings

From the operator panel, you can select menu items and associated values to print your jobs successfully. You can also use the operator panel to alter the setup and operating environment of the printer. See **Using printer menus** for an explanation of all the menu items.

You can modify printer settings by:

- Selecting a setting from a list of values
- Changing an On/Off setting
- Changing a numerical setting

To select a new value as a setting:

1. From a **Ready** status message, press **Menu**. The menu names appear.
2. Continue to press and release **Menu** until you see the menu you need.
3. Press **Select** to select the menu or menu item displayed on the second line of the display.
   - If the selection is a menu, the menu is opened and the first printer setting in the menu appears.
   - If the selection is a menu item, the default setting for the menu item appears. (The current user default setting has an asterisk [*] beside it.)

   Each menu item has a list of values for the menu item. A value can be:

   - A phrase or word to describe a setting
   - A numerical value that can be changed
   - An On or Off setting
4. Press **Menu** to move to the value you need.
5. Press **Select** to select the value on the second line of the display. An asterisk appears beside the value to indicate that it is now the user default setting. The new setting appears for one second, clears, displays the word **Saved**, and then shows the previous list of menu items.
6. Press **Return** to go back to previous menus. Make additional menu selections to set new default settings. Press **Go** if this is the last printer setting to change.

User default settings remain in effect until you save new settings or restore the factory defaults. Settings you choose from your software application can also change or override the user default settings you select from the operator panel.

Printing the menu settings page

Complete the following steps to print a list of the current user default settings and installed printer options:

1. Make sure the printer power is on and the **Ready** message appears.
2. Press **Menu** until you see Utilities Menu and then press **Select**.
3. Press **Menu** until you see Print Menus and then press **Select**.

   The message **`Printing Menu Settings`** appears and remains until the page prints. The printer returns to **Ready** when the page or pages finish printing.

If a message displays, see **Understanding printer messages** for more information.

The **diagram** in **Using printer menus** shows the menu items in each menu.

An asterisk (*) next to a value indicates the factory default setting. Factory defaults may differ for different countries.

Factory defaults are the function settings in effect the first time you turn your printer on. These remain in effect until you change them. Factory defaults are restored if you select the Restore value for the Factory Defaults menu item in the Utilities Menu. See **Utilities Menu** for more information.

When you select a new setting from the operator panel, the asterisk moves next to the selected setting to identify it as the current user default.

User defaults are the settings you select for different printer functions and store in printer memory. Once stored, these settings remain active until new ones are stored or the factory defaults are restored.

Note: Settings you choose from your software application may override the settings you select from the operator panel.

`Menus Disabled`

If your printer is configured as a network printer available to a number of users, **`Menus Disabled`** may appear when you press **Menu** from the **Ready** state. Disabling the menus prevents users from using the operator panel to inadvertently change a printer default that has been set by the person managing the printer. You can still use Print and Hold features, clear messages, and select items from the Job Menu when printing a job, but you cannot change other printer settings. You can, however, use your printer driver to override printer defaults and select settings for individual print jobs.

3 Using the Print and Hold function

When sending a job to the printer, you can specify in the driver that you want the printer to hold the job in memory. When you are ready to print the job, you must go to the printer and use the operator panel menus to identify which *held* job you want to print.

Note: *Print and Hold* functions require a minimum of 16MB available printer memory. We recommend a minimum of 32MB available printer memory and a hard disk.

To learn more about this function, click a topic:

- **Printing and deleting held jobs**
- **Recognizing when format errors occur**
- **Verify Print**
- **Reserve Print**
- **Accessing held jobs from the operator panel**
- **Repeat Print**
- **Confidential jobs**

Printing and deleting held jobs

Once held jobs are stored in printer memory, you can use the printer operator panel to specify what you want to do with one or more of the jobs. You can select either Confidential Job or Held Jobs (Repeat Print, Reserve Print, and Verify Print jobs) from the **Job Menu**. If you select Confidential Job, you must enter the personal identification number (PIN) you specified in the driver when you sent the job. See **Confidential jobs** for more information.

From either the Confidential Job or the Held Jobs menu items, you have five choices:

- Print All Jobs
- Print A Job
- Delete All Jobs
- Delete A Job
- Print Copies

Accessing held jobs from the operator panel

1. To access held jobs from the operator panel:
   - If the printer is Busy, press **Menu** and the Job Menu appears.
   - If the printer is Ready, continue to step 2.
2. Press **Menu** until you see Held Jobs or Confidential Job on the operator panel display, depending on the type of job you want to access.
3. Press **Select**.

   User Name appears on the first line of the operator panel. The second line displays the names of users currently associated with Print and Hold jobs.
4. Press **Menu** until you see your user name.

   Note: If you are looking for a Confidential Job, you are prompted to enter your PIN. See **Confidential jobs** for more information.
5. Press **Select**.
6. Press **Menu** until the action you want to take is on the second line of the operator panel (Print A Job, Delete A Job, and so on).
7. Press **Select**.
   - If you are looking for a particular job, press Menu to scroll through the list of available jobs, and press Select when the correct job is displayed. An asterisk (*) appears next to the job name indicating you have chosen to print or delete that job.
   - If you are prompted to enter the number of copies you want to print, use the Menu button to increase or decrease the number on the display, and then press Select.
8. Press **Go** to print or delete specific jobs you have marked.

   The printer briefly shows messages indicating what Print and Hold functions it is performing.

Recognizing when format errors occur

If the ⚡ symbol appears on the display, it indicates that the printer had trouble formatting one or more of the held jobs. These formatting problems are most commonly the result of insufficient printer memory or invalid data that might cause the printer to flush the job.

When a ⚡ symbol appears next to a held job, you can:

- Print the job. Be aware, however, that only part of the job may print.
- Delete the job. You may want to free up additional printer memory by scrolling through the list of held jobs and deleting others you have sent to the printer.

If formatting errors are a recurring problem with held jobs, your printer may require more memory.

Repeat Print

If you send a Repeat Print job, the printer prints all requested copies of the job *and* stores the job in memory so you can print additional copies later. You can print additional copies as long as the job remains stored in memory.

Note: Repeat Print jobs are automatically deleted from printer memory when the printer requires extra memory to process additional held jobs.

Reserve Print

If you send a Reserve Print job, the printer does not print the job immediately, but stores the job in memory so you can print the job later. The job is held in memory until you delete it from the Held Jobs menu. Reserve Print jobs may be deleted if the printer requires extra memory to process additional held jobs.

See **Printing and deleting held jobs** for information.

Verify Print

If you send a Verify Print job, the printer prints one copy and holds the remaining copies you requested from the driver in printer memory. Use Verify Print to examine the first copy to see if it is satisfactory before printing the remaining copies.

See **Printing and deleting held jobs** if you need help printing the additional copies stored in memory.

Note: Once all copies are printed, the Verify Print job is deleted from printer memory.

Confidential jobs

When you send a job to the printer, you can enter a personal identification number (PIN) from the driver. The PIN must be four digits using the numbers 1–6. The job is then held in printer memory until you enter the same four-digit PIN from the printer operator panel and choose to print or delete the job. This ensures that the job does not print until you are there to retrieve it, and no one else using the printer can print the job.

When you select Confidential Job from the Job Menu and then select your user name, the following prompt is displayed:

```
Enter PIN:
=____
```

Use the buttons on the operator panel to enter the four-digit PIN associated with your confidential job. The numbers next to the button names identify which button to press for each digit (1–6). As you enter the PIN, asterisks are displayed on the operator panel to ensure confidentiality.

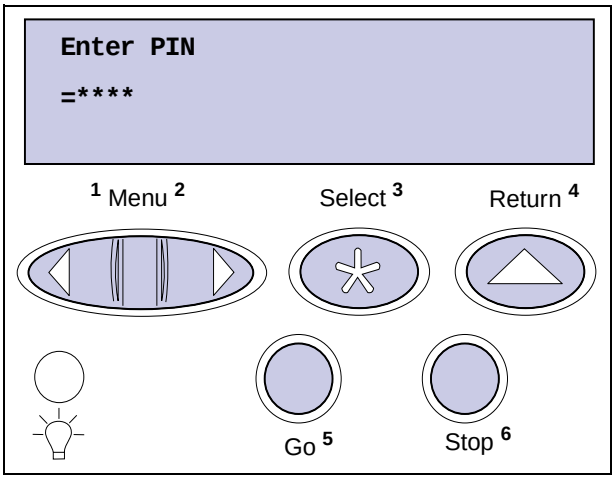

If you enter an invalid PIN, the message **No Jobs Found. Retry?** appears. Press **Go** to reenter the PIN, or press **Stop** to exit the Confidential Job menu.

When you enter a valid PIN, you have access to all print jobs matching the user name and PIN you entered. The print jobs matching the PIN you entered appear on the display when you enter the Print A Job, Delete A Job, and Print Copies menu items. You can then choose to print or delete jobs matching the PIN you entered. (See **Printing and deleting held jobs** for more information.) After printing the job, the printer deletes the confidential job from memory.

4 Canceling a print job

To cancel a print job:

1. Press **Menu**. Job Menu appears on the first line of the display and Cancel Job appears on the second line.

   Note: Job Menu is the only available menu item when the printer is in the Busy state.

2. Press **Select**.

   `Canceling Job` briefly appears in the display. The printer finishes printing any page already being printed, and then stops. The printer returns to the Ready state.

5 Printing folio and statement size paper

Folio and statement sizes are not available in the Paper Size menu until Size Sensing is turned off. To turn off Size Sensing:

1. Press and hold the **Select** and **Return** buttons while you turn the printer on.
2. Release the buttons when **`Performing Self Test`** appears.

   The printer performs its power-on sequence, and then Config Menu appears on the first line of the display.
3. Press **Menu** until you see Size Sensing, and then press **Select**.

   Tray 1 Sensing appears on the second line of the display.
4. Press **Menu** to select the input option that will hold the folio or statement size paper, and then press **Select**.

   The first line of the display shows the selected input option and the second line shows the current setting.
5. Press **Menu** to change the setting to Off, and then press **Select**.

   SAVED appears briefly on the display, and then is replaced by Config Menu on the first line and Size Sensing on the second line.
6. Press **Menu** until you see Exit Config Menu, and then press **Select**.
7. Activating Menu Changes appears briefly, followed by Performing Self Test. The printer returns to the Ready state.
8. Once Size Sensing is turned off, go into the Paper Size menu for that tray and change the size to folio or statement.

6 Choosing print material

The print quality and feed reliability of your printer and options can vary with the type and size of print material you use. This section provides guidelines for each type of print material. For information on card stock and labels, refer to the *Card Stock & Label Guide* located on Lexmark's Web site at **www.lexmark.com**.

Always print samples on the print material you are considering before buying large quantities.

Click a topic for more information:

- **Paper characteristics**
- **Recommended paper**
- **Unacceptable paper**
- **Choosing preprinted forms and letterhead**
- **Choosing prepunched paper**
- **Choosing paper**
- **Choosing envelopes**
- **Choosing labels**
- **Choosing card stock**
- **Choosing transparencies**

Paper characteristics

The following paper characteristics affect print quality and reliability. We recommend that you keep these guidelines in mind when evaluating new paper stock.

For detailed information, refer to the *Card Stock & Label Guide* located on the Lexmark Web site at **www.lexmark.com**.

Weight

The printer can automatically feed paper weights from 60 to 176 g/m^2 (16 to 47 lb bond) grain long. Paper lighter than 60 g/m^2 (16 lb) might not be stiff enough to feed properly, causing paper jams. For best performance, use 75 g/m^2 (20 lb bond) grain long paper. To use paper narrower than 182 x 257 mm (7.2 x 10.1 in.), we recommend that the basis weight be greater than or equal to 90 g/m^2 (24 lb bond).

Curl

Curl is the tendency of paper to curve at its edges. Excessive curl can cause paper feeding problems. Curl usually occurs after the paper passes through the printer, where it is exposed to high temperatures. Storing paper unwrapped in humid conditions, even in the paper tray, can contribute to paper curling.

Smoothness

The degree of smoothness of paper directly affects print quality. If the paper is too rough, the toner does not fuse to the paper properly, resulting in poor print quality. If the paper is too smooth, it can cause paper feeding problems. Smoothness needs to be between 100 and 300 Sheffield points; however, smoothness between 100 and 250 Sheffield points produces the best print quality.

Moisture content

The amount of moisture in the paper affects both print quality and the ability of the printer to feed the paper properly. Leave the paper in its original wrapper until you are ready to use it. This limits the exposure of the paper to moisture changes that can degrade its performance.

Grain direction

Grain refers to the alignment of the paper fibers in a sheet of paper. Grain is either *grain long*, running the length of the paper, or *grain short*, running the width of the paper.

For 60 to 176 g/m^2 (16 to 47 lb bond) paper, grain long fibers are recommended. For papers heavier than 176 g/m^2 (47 lb bond), grain short is preferred. For the multipurpose feeder, 60 to 135 g/m^2 (16 to 36 lb bond) paper, grain long fibers are recommended. For the multipurpose feeder, papers heavier than 135 g/m^2 (36 lb bond), grain short is preferred.

Fiber content

Most high-quality xerographic paper is made from 100% chemically pulped wood. This content provides the paper with a high degree of stability resulting in fewer paper feeding problems and better print quality. Paper containing fibers such as cotton possess characteristics that can result in degraded paper handling.

Recommended paper

To ensure the best print quality and feed reliability, use 75 g/m^2 (20 lb) xerographic paper. Business papers designed for general business use may also provide acceptable print quality.

Always print several samples before buying large quantities of any type of paper. When choosing any papers, consider the weight, fiber content, and color of the paper.

The laser printing process heats paper to high temperatures of 225°C (437°F) for MICR (Magnetic Ink Character Recognition) applications, and 205°C (401°F) for non-MICR applications. Use only papers that are able to withstand these temperatures without discoloring, bleeding, or releasing hazardous emissions. Check with the manufacturer or vendor to determine whether the paper you've chosen is acceptable for laser printers.

Unacceptable paper

The following papers are not recommended for use with the printer:

- Chemically treated papers used to make copies without carbon paper, also known as carbonless papers, carbonless copy paper (CCP), or no carbon required (NCR) paper.
- Coated papers (erasable bond)
- Multiple-part forms or documents
- Preprinted papers that require a *registration* (the precise print location on the page) greater than ±0.09 in., such as optical character recognition (OCR) forms

  In some cases, you can adjust registration with your software application to successfully print on these forms.
- Preprinted papers with chemicals that may contaminate the printer
- Preprinted papers that can be affected by the temperature in the printer fuser
- Rough-edged or curled papers
- Synthetic papers
- Thermal papers
- Less than 60 g/m^2 (16 lb) recycled paper
- Recycled papers containing more than 25% post-consumer waste that do not meet DIN 19 309

Choosing preprinted forms and letterhead

Use the following guidelines when selecting preprinted forms and letterhead paper for the printer:

- Use grain long papers for best results.
- Use only forms and letterhead printed using an offset lithographic or engraved printing process.
- Choose papers that absorb ink, but do not bleed.
- Avoid papers with rough or heavily textured surfaces.

Use papers printed with heat-resistant inks designed for use in xerographic copiers. The ink must withstand temperatures of 205°C (401°F) for non-MICR applications, and 225°C (437°F) for MICR applications, without melting or releasing hazardous emissions. Use inks that are not affected by the resin in the toner. Inks that are oxidation-set or oil-based should meet these requirements. Latex inks might not meet these requirements. If you are in doubt, contact your paper supplier.

Choosing prepunched paper

Prepunched paper brands can differ in the number and placement of holes and in manufacturing techniques.

Use the following guidelines when selecting and using prepunched paper:

- Test paper from several manufacturers before ordering and using large quantities of pre-punched paper.
- Paper should be punched at the paper manufacturer and not drilled into paper already packaged in a ream. Drilled paper can cause paper jams when multiple sheets feed through the printer.
- Prepunched paper can include more paper dust than standard paper. Your printer may require more frequent cleaning and feed reliability may not be as good as that of standard paper.
- Weight guidelines for prepunched paper are the same as for non punched paper.

Choosing paper

Proper paper loading helps prevent paper jams and ensures trouble-free printing.

To help avoid paper jams or poor print quality:

- *Always* use new, undamaged paper.
- Before loading paper, you need to know the recommended print side of the paper you're using. This information is usually indicated on the paper package.
- *Do not* use paper that you have cut or trimmed yourself.
- *Do not* mix paper sizes, weights, or types in the same paper source; mixing results in paper jams.
- *Do not* use coated papers.
- *Do not* forget to change the Paper Size setting when you use a source that does not support auto size sensing.
- *Do not* remove paper trays while a job is printing or **Busy** is displayed.
- Make sure the Paper Type, Paper Texture, and Paper Weight settings are correct. (See **Paper Menu** for detailed information about these settings.)
- Make sure the paper is properly loaded in the paper source.
- Flex paper back and forth. Do not fold or crease the paper. Straighten the edges on a level surface.

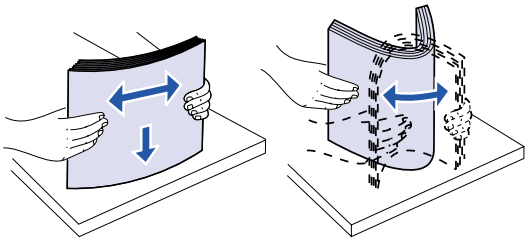

Choosing envelopes

When printing on envelopes:

- To achieve the best possible print quality, use only high-quality envelopes that are designed for use in laser printers.
- Use only new, undamaged envelopes.
- Load only one size of envelope at a time in the envelope feeder.
- Make sure the glue is not exposed.
- A combination of high humidity (over 60%) and the high printing temperatures may seal the envelopes.
- Be sure to select Env Feeder or MP Feeder as the paper source in the **Paper Menu** and set the correct envelope size.

The laser printing process heats envelopes to a temperature of 205°C (401°F). Use only envelopes that are able to withstand these temperatures without sealing, excessive curling, wrinkling, or releasing hazardous emissions. If you have any doubts about the envelopes you are considering using, check with the envelope supplier.

For best performance, use envelopes made from 75 g/m^2 (20 lb bond) paper. You can use up to 105 g/m^2 (28 lb bond) weight for the multipurpose feeder or 105 g/m^2 (28 lb bond) weight for the envelope feeder as long as the cotton content is 25% or less. Envelopes with 100% cotton content must not exceed 90 g/m^2 (24 lb bond) weight.

To minimize jams, do *not* use envelopes that:

- Have excessive curl or twist
- Are stuck together or damaged in any way
- Contain windows, holes, perforations, cutouts, or embossing
- Use metal clasps, string ties, or metal folding bars
- Have an interlocking design
- Have postage stamps attached
- Have any exposed adhesive when the flap is in the sealed or closed position
- Have nicked edges or bent corners
- Have rough, cockle, or laid finishes

Choosing labels

The printer can print on many labels designed for use with laser printers. These labels are supplied in letter size and A4 size sheets.

When printing on labels:

- Be sure to select Labels in the Paper Type menu item in the Paper Menu. (See **Paper Type** for detailed information about these settings.)
- *Do not* load labels together with paper or transparencies in the same paper tray; mixing print materials can cause feeding problems.

- *Do not* load partial sheets with areas exposed by missing labels; this can cause labels to peel off during printing, jam, and contaminate your printer and your print cartridge with adhesive. It can also void your printer and cartridge warranties.
- Avoid using labels that may release hazardous emissions when heated.

Note: Labels are one of the most difficult print materials for laser printers. Your printer requires a special fuser cleaner for label applications in order to optimize feed reliability. See **Ordering supplies** for information on obtaining a label fuser cleaner.

After continuously printing approximately 10,000 page sides of labels (or each time you replace the print cartridge), complete the following steps to maintain printer feeding reliability:

1. Print five sheets of paper.
2. Wait approximately five seconds.
3. Print five more sheets of paper.

For detailed information on label printing, characteristics, and design, refer to the *Card Stock & Label Guide*, available on the Lexmark Web site at **www.lexmark.com**.

Choosing card stock

Card stock is single-ply and has many properties. The orientation of paper fibers, moisture content, thickness, and texture can all affect printing on card stock. See **Print material specifications** for information on the preferred weight for the grain direction of print materials.

When printing on card stock:

- Be sure to select Card Stock in the Paper Type menu item in the Paper Menu. (See **Paper Type** for detailed information about these settings.)
- Be aware that preprinting, perforation, and creasing can significantly affect the print quality and cause paper handling or jamming problems.
- Avoid using card stock that may release hazardous emissions when heated.

After printing approximately 10,000 page sides of card stock (or each time you replace the print cartridge), complete the following steps to maintain printer feeding reliability:

1. Print five sheets of paper.
2. Wait approximately five seconds.
3. Print five more sheets of paper.

For more information, refer to the *Card Stock & Label Guide*, available on the Lexmark Web site at **www.lexmark.com**.

Choosing transparencies

The printer can print directly on transparencies designed for use in laser printers. Print quality and durability depend on the transparency used. Always print samples on the transparencies you are considering before buying large quantities.

The Paper Type setting should be set to Transparency to help prevent jams. (See **Paper Type** for detailed information about this setting.) Check with the manufacturer or vendor to determine whether your transparencies are compatible with laser printers that heat transparencies to 212°C (414°F). Use only transparencies that are able to withstand these temperatures without melting, discoloring, offsetting, or releasing hazardous emissions. For detailed information, refer to the *Card Stock & Label Guide*, which is available on the Lexmark Web site at **www.lexmark.com**.

Transparencies can be fed automatically from the multipurpose feeder and all standard and optional trays, except the 2000-sheet drawer, for all printer models. See **Print material specifications** for information about transparency compatibility with output options.

Be careful when you handle transparencies. Fingerprints on the surface of the transparency cause poor print quality.

7 Print material specifications

The following tables provide information on standard and optional paper sources for your printer model, including the paper sizes you can select from the Paper Size menu and supported weights.

Note: If you use a paper size not listed, select the next larger size.

For information on card stock and labels, refer to the *Card Stock & Label Guide* available on Lexmark's Web site at **www.lexmark.com**.

Paper size	Dimensions	250-sheet drawer	250 UAT	Optional 500-sheet drawer	Optional 500 UAT	Multipurpose tray	Optional 2000-sheet drawer	Optional envelope feeder	Optional duplex unit
A4	210 x 297 mm (8.27 x 11.7 in.)	✓		✓		✓	✓		✓
A5	148 x 210 mm (5.83 x 8.27 in.)	✓		✓		✓	✓		✓
JIS B5	182 x 257 mm (7.17 x 10.1 in.)	✓		✓		✓	✓		✓
Letter	215.9 x 279.3 mm (8.5 x 11 in.)	✓		✓		✓	✓		✓
Legal	215.9 x 355.6 mm (8.5 x 14 in.)	✓		✓		✓	✓		✓
Executive	184.2 x 266.7 mm (7.25 x 10.5 in.)	✓		✓		✓	✓		✓
Folio[2]	216 x 330 mm (8.5 x 13 in.)	✓		✓		✓			✓
Statement[2]	139.7 x 215.9 mm (5.5 x 8.5 in.)	✓		✓		✓			

[1] This default setting is 215.9 x 355.6 mm (8.5 x 14 in.). You can set the actual page size from your application software or through the **Universal Setup** menu item.

[2] This size does not appear in the Paper Size menu until Tray Size Sensing is turned off. See **Printing folio and statement size paper** for more information.

Paper size	Dimensions	250-sheet drawer	250 UAT	Optional 500-sheet drawer	Optional 500 UAT	Multipurpose tray	Optional 2000-sheet drawer	Optional envelope feeder	Optional duplex unit
Universal[1]	139.7 x 210 mm to 215.9 x 355.6 mm (5.5 x 8.27 in. to 8.5 x 14 in.)	✓	✓	✓	✓	✓			
	69.85 x 127 mm to 229 x 355.6 mm (2.75 x 5 in. to 9.01 x 14 in.)		✓		✓	✓			
	148 x 182 mm to 215.9 x 355.6 mm (5.83 x 7.17 in. to 8.5 x 14 in.)	✓	✓	✓	✓	✓			✓
7 ¾ Envelope	98.4 x 190.5 mm (3.875 x 7.5 in.)					✓		✓	
9 Envelope	98.4 x 225.4 mm (3.875 x 8.9 in.)					✓		✓	
10 Envelope	104.8 x 241.3 mm (4.12 x 9.5 in.)					✓		✓	
DL Envelope	110 x 220 mm (4.33 x 8.66 in.)					✓		✓	
C5 Envelope	162 x 229 mm (6.38 x 9.01 in.)					✓		✓	
B5 Envelope	176 x 250 mm (6.93 x 9.84 in.)					✓		✓	
Other Envelope[1]	98.4 x 162 mm to 176 x 250 mm (3.87 x 6.38 in. to 6.93 x 9.84 in.)					✓		✓	

[1] This default setting is 215.9 x 355.6 mm (8.5 x 14 in.). You can set the actual page size from your application software or through the **Universal Setup** menu item.

[2] This size does not appear in the Paper Size menu until Tray Size Sensing is turned off. See **Printing folio and statement size paper** for more information.

Print material	250-sheet drawer	Optional 500-sheet drawer	Multipurpose tray	Optional 2000-sheet drawer	Optional envelope feeder	Optional duplex unit	Standard output bin
Paper	✓	✓	✓	✓		✓	✓
Card stock	✓	✓	✓			✓	✓
Transparencies	✓	✓	✓				✓
Vinyl labels*	✓	✓	✓				✓
Paper labels*	✓	✓	✓				✓
Polyester labels*	✓	✓	✓				✓
Dual-web labels*	✓	✓	✓				✓

* Printing label applications on the Lexmark T522 requires a special label fuser cleaner which prevents duplexing. The label fuser cleaner is included with a special label cartridge for label applications. See **Ordering supplies** for more information on obtaining a label fuser cleaner.

Print material	Type	Print material weight		
		Integrated tray and optional 500-sheet drawer	Multipurpose feeder and optional 250-sheet drawer	Envelope feeder
Paper	Xerographic or business paper	60 to 176 g/m^2 grain long (16 to 47 lb bond)	60 to 135 g/m^2 grain long (16 to 36 lb bond)	N/A
Card stock—maximum (grain long)[1]	Index Bristol	163 g/m^2 (90 lb)	120 g/m^2 (67 lb)	N/A
	Tag	163 g/m^2 (100 lb)	120 g/m^2 (74 lb)	N/A
	Cover	176 g/m^2 (65 lb)	135 g/m^2 (50 lb)	N/A
Card stock—maximum (grain short)[1]	Index Bristol	199 g/m^2 (110 lb)	163 g/m^2 (90 lb)	N/A
	Tag	203 g/m^2 (125 lb)	163 g/m^2 (100 lb)	N/A
	Cover	216 g/m^2 (80 lb)	176 g/m^2 (65 lb)	N/A
Transparencies	Laser printer	138 to 146 g/m^2 (37 to 39 lb bond)	138 to 146 g/m^2 (37 to 39 lb bond)	N/A

[1] Grain short is preferred for papers over 176 g/m^2.

[2] Printing label applications on the Lexmark T522 requires a special label fuser cleaner which prevents duplexing.

[3] 28 lb bond envelopes are limited to 25% cotton content.

[4] Includes envelopes fed from the multipurpose tray only.

Print material	Type	Print material weight		
		Integrated tray and optional 500-sheet drawer	Multipurpose feeder and optional 250-sheet drawer	Envelope feeder
Labels—upper limit[2]	Paper	180 g/m^2 (48 lb bond)	163 g/m^2 (43 lb bond)	N/A
	Dual-web paper	180 g/m^2 (48 lb bond)	163 g/m^2 (43 lb bond)	N/A
	Polyester	220 g/m^2 (59 lb bond)	220 g/m^2 (59 lb bond)	N/A
	Vinyl	300 g/m^2 (92 lb liner)	260 g/m^2 (78 lb liner)	N/A
Integrated forms	Pressure-sensitive area (must enter the printer first)	140 to 175 g/m^2	140 to 175 g/m^2	N/A
	Paper base (grain long)	75 to 135 g/m^2 (20 to 36 lb bond)	75 to 135 g/m^2 (20 to 36 lb bond)	N/A
Envelopes 100% cotton content maximum weight–24 lb	Sulfite, wood-free or up to 100% cotton bonds	N/A	60 to 105 g/m^2 (16 to 28 lb bond) [3, 4]	75 to 90 g/m^2 (20 to 24 lb bond)

[1] Grain short is preferred for papers over 176 g/m^2.

[2] Printing label applications on the Lexmark T522 requires a special label fuser cleaner which prevents duplexing.

[3] 28 lb bond envelopes are limited to 25% cotton content.

[4] Includes envelopes fed from the multipurpose tray only.

8 Loading print material

This section provides information about loading the various input options. Proper paper loading helps prevent paper jams and ensure trouble-free printing.

Before loading paper, you need to know the recommended print side of the paper you're using. This information is usually indicated on the paper package.

Click below for information on loading a particular option:

- **Loading a paper tray**
- **Loading the multipurpose feeder**
- **Loading the envelope feeder**
- **Loading the 2000-sheet drawer**

9 Loading a paper tray

Complete these instructions to load print materials into any of the standard or optional trays.

1. Remove the paper tray.
2. Pull the width guide tab and slide the width guide to the far right side of the tray.
3. Squeeze the length guide lever and slide the length guide to the correct position for the size paper you are loading.

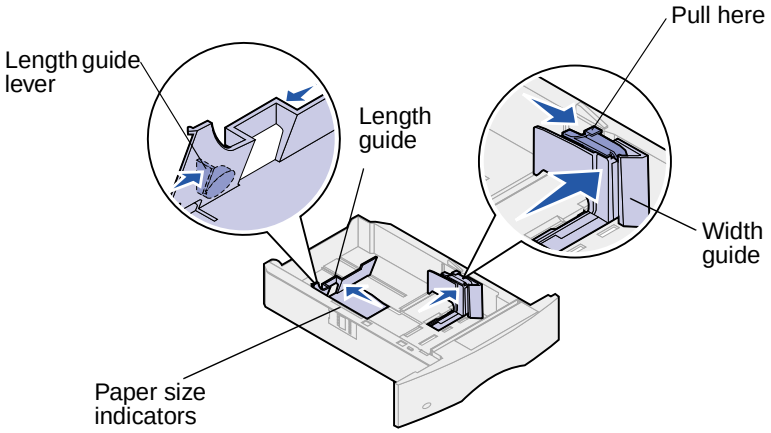

4. Place the paper into the paper tray with the recommended print side face down for single-sided printing and face up for double-sided printing. Do not fill paper above the stack height mark.
5. Pull the width guide tab and slide the width guide to the left until it lightly rests against the edge of the paper stack.

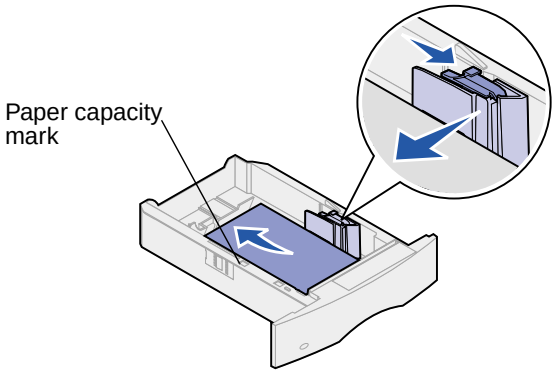

6 Reinstall the tray.

Loading letterhead

For *simplex* (single-sided) printing on letterhead, place the printed side *face down* as shown.

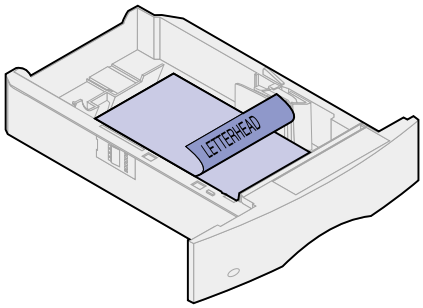

For *duplex* printing on letterhead, place the printed side *face up* as shown.

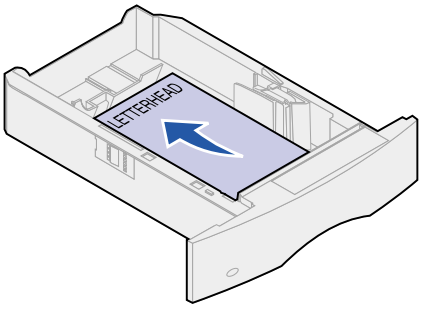

Note: The Paper Loading menu item lets you print simplex (single-sided) jobs on letterhead (or other preprinted media) that has been *loaded specifically for duplex printing*. See **Paper Loading** for more information.

10 Loading the multipurpose feeder

The multipurpose feeder can hold several sizes and types of paper, such as transparencies, postcards, note cards, and envelopes. It is useful for single page printing on letterhead, colored paper, or other special paper.

Keep in mind the following capacities, paper dimensions, and operating tips when loading the multipurpose feeder.

Capacity

The maximum stack height is 10 mm (0.4 in.). The multipurpose feeder can hold approximately:

- 100 sheets of 75 g/m^2 (20 lb) paper
- 10 envelopes
- 75 transparencies

Paper dimensions

The multipurpose feeder accepts paper within the following dimensions:

- Width—69.85 mm (2.75 in.) to 229 mm (9.01 in.)
- Length—127 mm (5 in.) to 355.6 mm (14 in.)

Trouble-free printing

- Load only one size of paper or envelopes at a time in the multipurpose feeder.
- To achieve the best possible print quality, use only high-quality print media that is designed for use in laser printers. For more guidelines on paper, see **Choosing print material**.
- To prevent paper jams, do not add or remove paper when there is still paper in the multipurpose feeder. This applies to other types of print materials, too.
- Never add print materials to the multipurpose feeder while the printer is printing from the multipurpose feeder. Doing so may cause a paper jam.
- Print material should be loaded with the recommended print side up and the top of the print material going into the multipurpose feeder first.

- *Do not* place objects on the multipurpose feeder. Also, avoid pressing down or applying excessive force on it.
- *Do not* remove any paper tray while a job is printing from the multipurpose feeder or **Busy** is displayed on the operator panel. Doing so may cause a paper jam.

Note: The multipurpose feeder may be used with the optional envelope feeder installed.

The icons on the multipurpose feeder show you how to load the multipurpose feeder with paper, how to turn an envelope for printing, and how to load letterhead paper for simplex and duplex printing. See **Loading letterhead** for detailed instructions on loading documents loaded on letterhead.

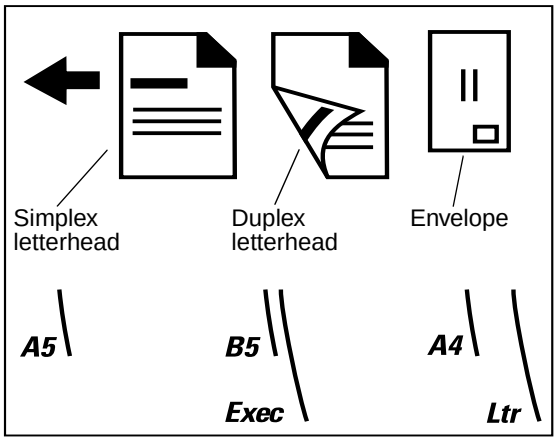

Note: The Paper Loading menu item in the Paper Menu lets you print simplex (single-sided) jobs on letterhead (or other preprinted media) that has been *loaded specifically for duplex printing*. For more information, see **Paper Loading**.

To load the multipurpose feeder:

1 Push the lower release latch. The multipurpose feeder door drops open.

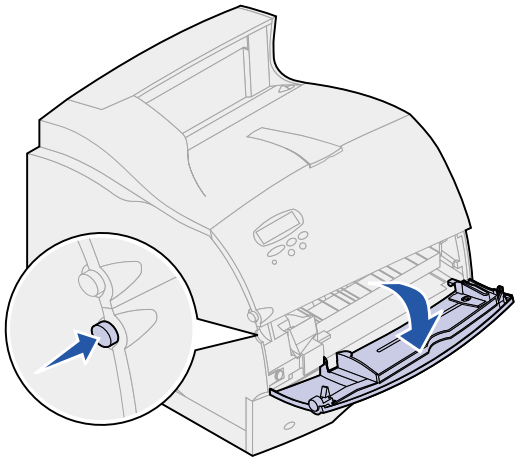

2 Pull out the metal bar in the recessed area on the multipurpose feeder far enough to accommodate the paper you will be using.

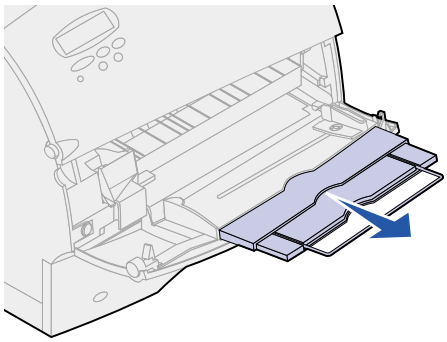

3 Slide the paper width guide to the far right.

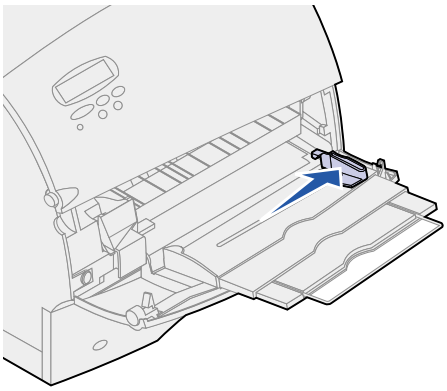

4 Prepare the print material for loading.

– Flex paper or fan envelopes back and forth. Do not fold or crease the paper. Straighten the edges on a level surface.

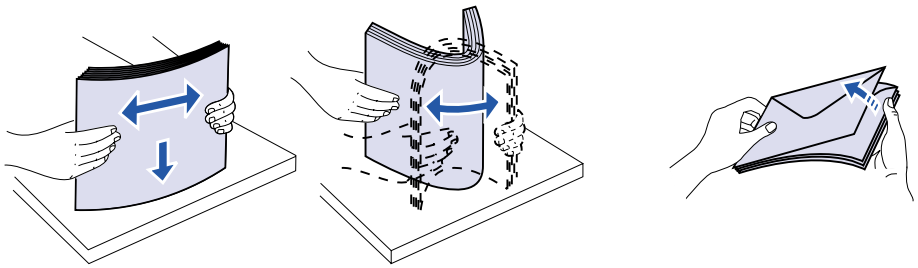

– Hold transparencies by the edges and avoid touching the print side. Fan the stack of transparencies to prevent jams. Be careful not to scratch or leave fingerprints on the transparencies.

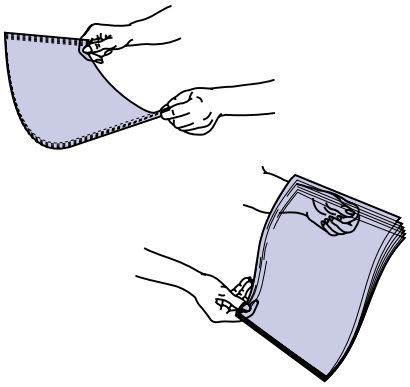

5 Use the stack height limiter as a guide for stack height when loading print materials.

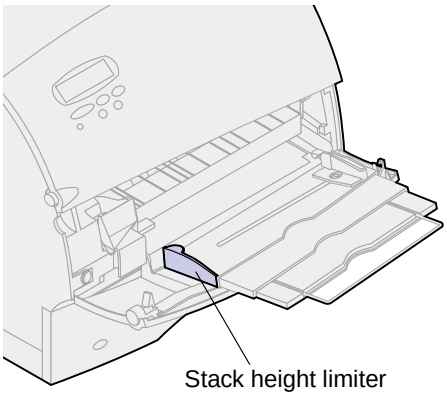

6 Load one type of print material in the multipurpose feeder. *Do not* mix types. Click a topic for loading instructions:

– **Loading paper and transparencies**
– **Loading envelopes**
– **Loading letterhead**

Loading paper and transparencies

a Load paper with the left edge of the stack against the stack height limiter and with the recommended print side face up.

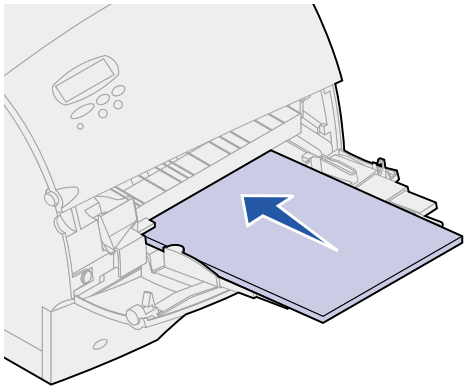

b Continue with **step 7**.

Loading envelopes

a Load envelopes flap side down with the stamp area and flap on the left side. The end of the envelope with the stamp area enters the multipurpose feeder first.

WARNING: Never use envelopes with stamps, clasps, snaps, windows, coated linings, or self-stick adhesives. These envelopes may severely damage the printer.

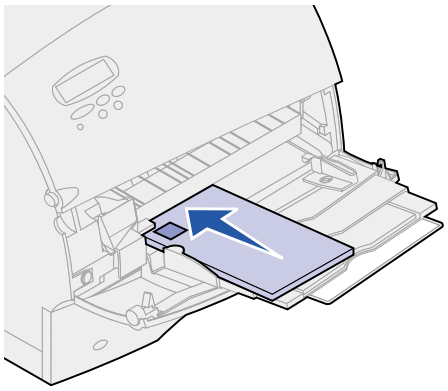

b Continue with **step 7**.

Note: If envelopes jam while printing, try reducing the number of envelopes in the multipurpose feeder.

Loading letterhead

Load letterhead according to the options installed on the printer. Click the topic that describes your printer configuration.

- **Without a duplex unit**
- **With a duplex unit**

Without a duplex unit

a Load letterhead paper for *single-sided* printing with the logo face up. The end of the sheet with the logo should enter the printer first.

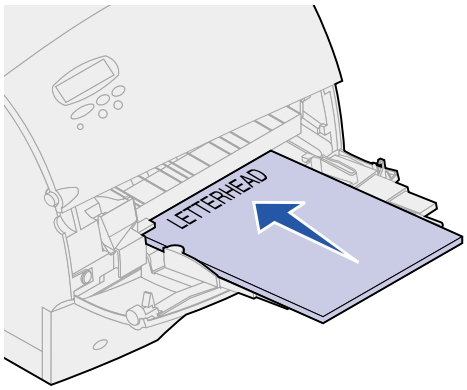

b Continue with **step 7**.

With a duplex unit

a Load letterhead paper for *duplex* printing with the logo face down. The end of the sheet with the logo should enter the printer last.

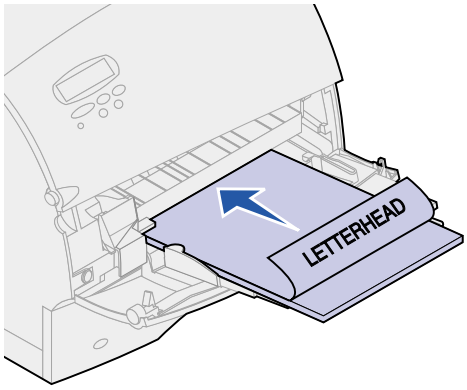

b Continue with **step 7**.

Note: The Paper Loading menu item in the Paper Menu lets you print simplex (single-sided) jobs on letterhead (or other preprinted media) that has been *loaded specifically for duplex printing*. For more information, see **Paper Loading**.

7 Gently slide the print material into the multipurpose feeder as far as it will go. Forcing the print material may cause it to buckle.

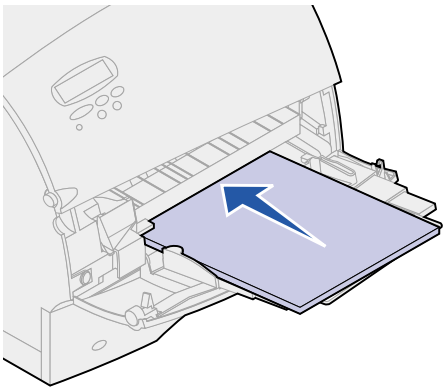

8 Slide the paper width guide to the left until it lightly touches the stack of print material. *Do not* bend the print material.

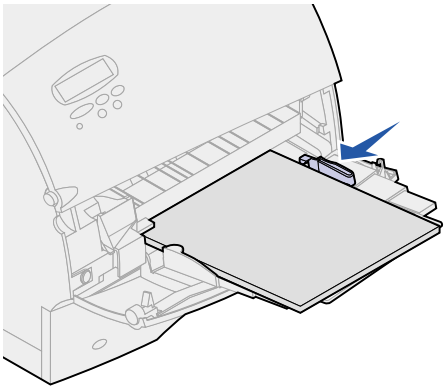

9 Select the paper source, size, and type from your software application and select paper size and type from the printer operator panel.

a Make sure the Paper Size and Paper Type for the multipurpose feeder (MP Feeder Size and MP Feeder Type) are set to the correct value for the print material you are loading. (See **Paper Size** and **Paper Type** for detailed information about these settings.)

b Press **Go** to return to Ready.

Note: Software settings may override operator panel settings.

Closing the multipurpose feeder

1 Remove print material from the multipurpose feeder.

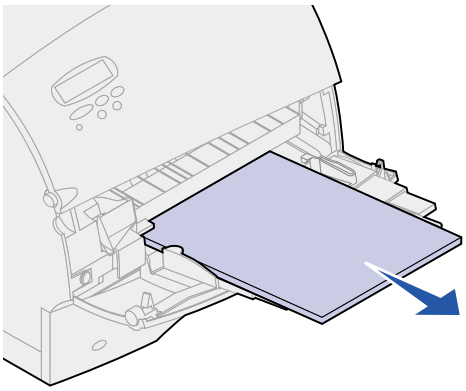

2 Push the metal bar straight back to collapse the multipurpose feeder to its short-length position.

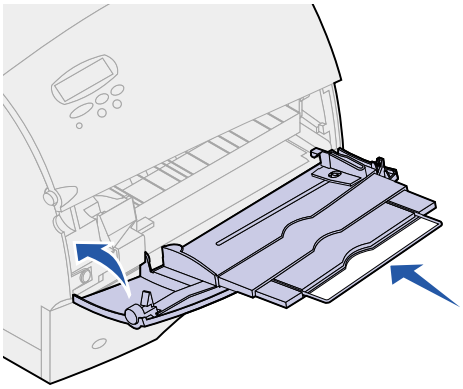

3 Close the multipurpose feeder door.

11 Loading the envelope feeder

1 Gently adjust the envelope support for the size you are loading:

- Fully closed (pushed in toward the printer) for short envelopes
- Extended to the middle position for medium-length envelopes
- Fully open (extended to its full length) for long envelopes

WARNING: *Do not* place objects on the envelope feeder. Avoid pressing down on it or applying excessive force.

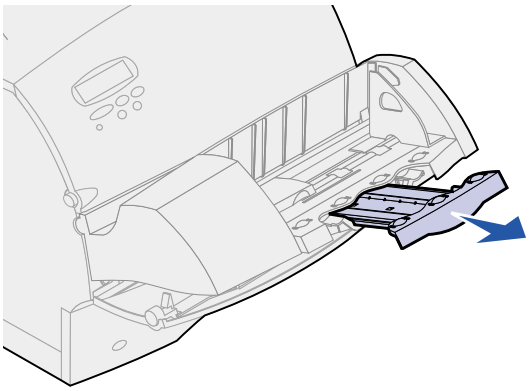

2 Lift the envelope weight back toward the printer. It stays in place.

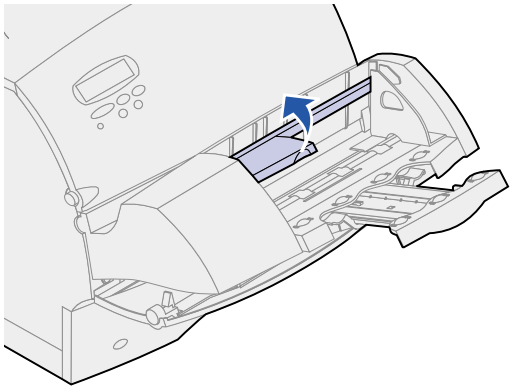

3 Slide the envelope edge guide to the far right.

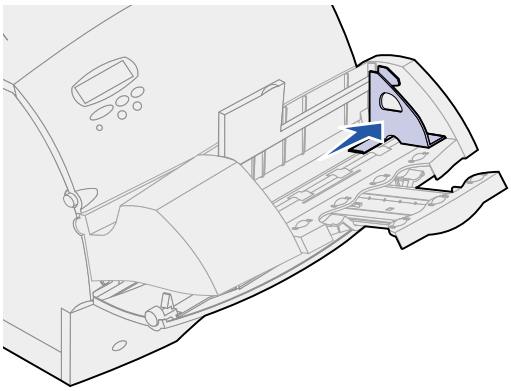

4 Flex a stack of envelopes back and forth and then straighten the edges on a level surface. Press down the corners to flatten them.

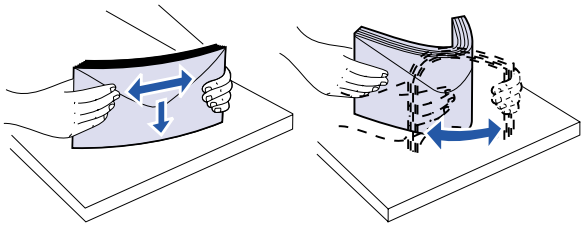

Fan the envelopes. This prevents the edges of the envelopes from sticking together and helps them feed properly.

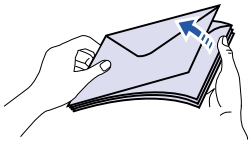

Note: When you load envelopes, do not exceed the maximum stack height of 64.7 mm (2.55 in.). The envelope feeder holds a maximum of 85 envelopes (75 g/m^2, 20 lb bond).

5 Load the stack of envelopes flap side down with the stamp area and the flap on the left. The end of the envelopes with the stamp area enters the envelope feeder first. Let the envelopes at the bottom of the stack slide into the envelope feeder slightly more than the ones at the top of the stack.

WARNING: Never use envelopes with stamps, clasps, snaps, windows, coated linings, or self-stick adhesives. These envelopes may severely damage the printer. See **Choosing envelopes** for more information.

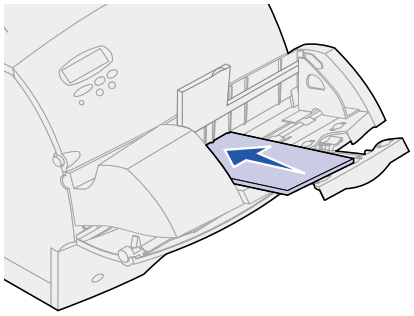

Note: Do not load more envelopes by forcing them under the envelope feeder weight. This causes jams.

6 Slide the envelope edge guide to the left until it lightly touches the stack. Make sure the envelopes do not buckle.

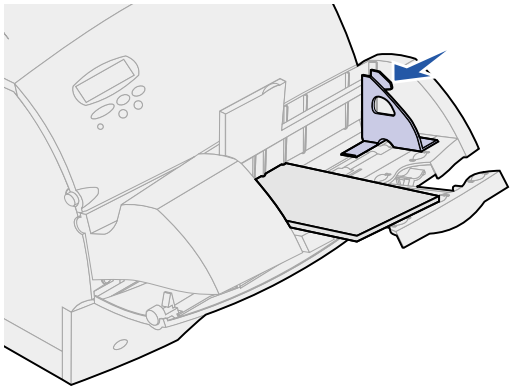

7 Lower the envelope weight to the stack.

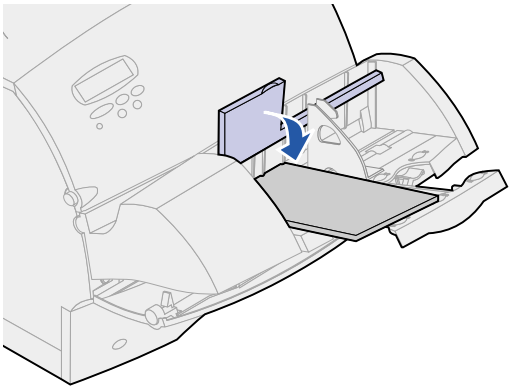

8 Select the paper source, size, and type from your software application.

9 Select the paper size and type from printer operator panel:

a Make sure the Paper Size for the envelope feeder (Env Feeder Size) is set to the correct envelope size you are loading. (See **Paper Size** for detailed information about this setting.)

b Press **Go** to return to Ready.

Note: Software settings may override operator panel settings.

If envelopes jam, see **Clearing paper jams**.

12 Loading the 2000-sheet drawer

For information on loading the 2000-sheet drawer, refer to the ***2000-Sheet Drawer User's Guide*** on the *Lexmark T522 Publications* CD that came with your printer.

13 Storing paper

Properly storing paper helps ensure trouble-free printing. Use the following guidelines:

- For best results, store paper in an environment where the temperature is approximately 21°C (70°F) and the relative humidity is 40%.
- Store cartons of paper on a pallet or shelf, rather than directly on the floor.
- If you store individual packages of paper out of the original carton, make sure they rest on a flat surface so the edges do not buckle or curl.
- *Do not* place anything on top of the paper packages.

14 Tray linking

Tray linking enables the automatic linking feature for trays when you use the same size and type of print material in multiple paper sources (trays).

For example, let's say you have loaded two optional trays with the same size print material and both are set to the same paper type. When one tray becomes empty, the printer automatically selects print material from the other tray since the printer sees the trays as linked.

If you use different print material in the trays, each source with a different print material must have the Paper Type set to a unique value to disable the automatic linking feature. If all the trays do not have the same paper type when they are linked, you could mistakenly print a job on the wrong paper type.

15 Tips for avoiding paper jams

By carefully selecting print materials and loading them properly, you can avoid most paper jams. If jams do occur, follow the steps outlined in **Clearing paper jams**. If jams occur frequently, make sure you follow these tips to avoid jams:

- See **Loading print material** to load paper properly. Make sure the adjustable guides are positioned correctly.
- *Do not* overload the paper trays. Make sure the paper is under the paper capacity mark on the inside of the paper tray.
- *Do not* remove paper trays while print jobs are in process.
- Flex, fan, and straighten the paper before loading it.
- Fan stacks of labels or transparencies before loading them into trays or the multipurpose feeder. If jams do occur using the multipurpose feeder, try feeding one sheet at a time.
- *Do not* load wrinkled, creased, damp, or curled paper.
- *Do not* mix paper types or paper sizes in one tray.
- *Do not* add paper to existing paper in tray. Allow tray to go empty before adding more paper.
- Use only recommended print materials. See **Recommended paper**.
- Make sure the recommended print side is face down for simplex printing when loading all trays.
- Keep print materials stored in an acceptable environment. See **Moisture content**.

16 Replacing the print cartridge

Order a new print cartridge when the **Toner Low** message first appears so you will have it when the current one no longer prints satisfactorily. See **Ordering supplies** for information on ordering print cartridges.

Note: We do not recommend that you use print cartridges from a third party. Print quality and printer reliability cannot be guaranteed if you do. For best results, use Lexmark supplies.

To utilize the remaining toner, remove the cartridge by gripping the handles with both hands. With the cartridge arrows pointing downward, shake the print cartridge back and forth. Reinstall the cartridge and then press **Go**.

Complete the following steps to replace the print cartridge. Refer to the documentation that comes with the print cartridge for detailed installation information.

1. Turn the printer off and unplug the printer power cord.
2. Open the front doors and remove the used print cartridge.

   WARNING: Never touch the photoconductor drum on the underside of the print cartridge. Use the handhold on the cartridge to avoid touching this area.

3. Clean the printer.
4. Install the new print cartridge and close the front door.
5. Replace the fuser cleaner if you are printing special label applications.
6. Plug the printer power cord into a properly grounded electrical outlet and turn the printer on.
7. Follow the instructions on the new print cartridge box to return the used print cartridge to Lexmark for recycling.

   When you return a used print cartridge, you contribute to a worldwide recycling effort at no cost to you.

Note: The print cartridge warranty is voided by unauthorized refilling.

17 Replacing the charge roll

Order a new charge roll kit when toner fog or background shading appears. See **Ordering supplies** for information on ordering a charge roll.

Complete the following steps to replace the charge roll. Refer to the documentation that comes with the charge roll for detailed installation information.

1. Turn the printer off and unplug the printer power cord.
2. Open the front doors and remove the print cartridge.
3. Remove the old charge roll.
4. Install the new charge roll.
5. Reinstall the print cartridge and close the front doors.
6. Plug the printer power cord into a properly grounded electrical outlet.
7. **Reset the maintenance counter**.

18 Replacing the transfer roll

Order a new transfer roll when light print, toner fog, or background shading appears. See **Ordering supplies** for information on ordering a transfer roll.

Complete the following steps to replace the transfer roll. Refer to the documentation that comes with the transfer roll for detailed installation information.

1. Turn the printer off and unplug the printer power cord.
2. Open the front doors and remove the print cartridge.
3. Remove the old transfer roll.
4. Install the new transfer roll.
5. Reinstall the print cartridge and close the front doors.
6. Plug the printer power cord into a properly grounded electrical outlet.
7. **Reset the maintenance counter**.

19 Replacing the fuser assembly

Order a new fuser assembly when toner fog or background shading appears. See **Ordering supplies** for information on ordering a fuser assembly.

CAUTION: The fuser assembly should only be replaced by a Lexmark service technician.

Note: For best results, use Lexmark supplies with the printer. If you are in the U.S. or Canada, call 1-800-438-2468 for information about Lexmark Authorized Supplies Dealers in your area. In other countries, contact the place where you bought your printer.

20 Resetting the maintenance counter

After replacing all the items in the **maintenance kit**, reset the maintenance counter:

1. Press and hold the **Select** and **Return** buttons while you turn the printer on.
2. Release the buttons when **`Performing Self Test`** appears on the display.

   The printer performs its power-on sequence, and then Config Menu appears on the first line of the display.
3. Press **Menu** until you see Reset Maint Cnt and then press **Select**.

   Reset appears on the second line of the display.
4. Press **Select**.

   `Resetting Maint Cnt Value` appears briefly on the display, and then is replaced by Config Menu on the top line and Reset Maint Cnt on the second line.
5. Press **Menu** until you see **`Exit Config Menu`**, and then press **Select**.

   `Activating Menu Changes` appears briefly, followed by **`Performing Self Test`**. The printer returns to the Ready state.

20 Ordering supplies

For best results, use Lexmark supplies with the printer. If you are in the U.S. or Canada, call 1-800-438-2468 for information about Lexmark Authorized Supplies Dealers in your area, or visit the Lexmark Web site at **www.lexmark.com**. In other countries, contact the place where you bought your printer.

Maintenance kit

`80 Scheduled Maintenance` appears on the display after 250,000 pages have printed to let you know it is time to replace printer maintenance items.

Print cartridges

Order a new print cartridge when **`Toner Low`** first appears on the display so you will have it when the current one no longer prints satisfactorily.

Five print cartridges are specifically designed for your printer:

Print cartridge part number[1]	Average yield	Print coverage (approximate)
12A6830	7,500 pages	5%
12A6835	20,000 pages	
12A6839 (label cartridge; shipped with a label fuser cleaner[2])	20,000 pages	

[1] Sold at a special price with the understanding that you return your empty cartridges only to Lexmark. For regular priced cartridges without these terms, order part number 12A6730 (7,500 pages) or 12A6735 (20,000 pages).

[2] Label fuser cleaners are not recommended for duplex printing.

Label fuser cleaner

A special label fuser cleaner should be used for label applications to optimize feeding reliability. They are included in the print cartridge box when you order part number 12A6839. You also may order this item separately using part number 99A0725.

Label fuser cleaners are not recommended for duplex printing.

Charge roll

Order part number 99A1017.

Transfer roll

Order part number 99A1015.

Fuser assembly

Order a fuser assembly when **`80 Scheduled Maintenance`** first appears on the display. See the following table for the fuser assembly part number for your specific printer.

Printer power supply	Fuser assembly part number
115 V	11K0555
220 V	11K0556

21 Storing supplies

Store supplies in their original packaging until you are ready to install them.

Do not store supplies in:

- Temperatures greater than 43°C (110°F)
- An environment with extreme changes in humidity or temperature
- Direct sunlight
- Dusty places
- A car for a long period of time
- An environment where corrosive gases are present
- An environment with salty air

22 Checking an unresponsive printer

When you have a problem, first make sure that:

- The printer power cord is plugged into the printer and a properly grounded electrical outlet.
- The printer power switch is on.
- The electrical outlet is not turned off by any switch or breaker.
- Other electrical equipment plugged into the outlet is working.
- You try turning the printer off, then wait for about 10 seconds, and turn the printer on. This often fixes the problem.
- Your printer driver settings are correct.

Note: If an error message appears, see **Understanding printer messages**.

23 Clearing paper jams

By carefully selecting print materials and loading them properly, you can avoid most paper jams. (See the suggestions in **Tips for avoiding paper jams**.) If paper jams do occur, follow the steps in this section.

To resolve the paper jam messages, *you must clear all paper from the paper path*. Press **Go** to resume printing. The printer prints a new copy of the page that jammed if Jam Recovery is set to On or Auto; however, the Auto setting does not guarantee the page will print.

Identifying paper jam areas

See the diagram on **page 58** for the path the paper travels through the printer and options, and areas where jams may occur. The path varies depending on the paper source.

Note: If a jam occurs in the multipurpose feeder, you receive a **`250 Paper Jam`** message. The **`260 Paper Jam`** is shown here for a jam in the optional envelope feeder. Both types of jams occur in the same way.

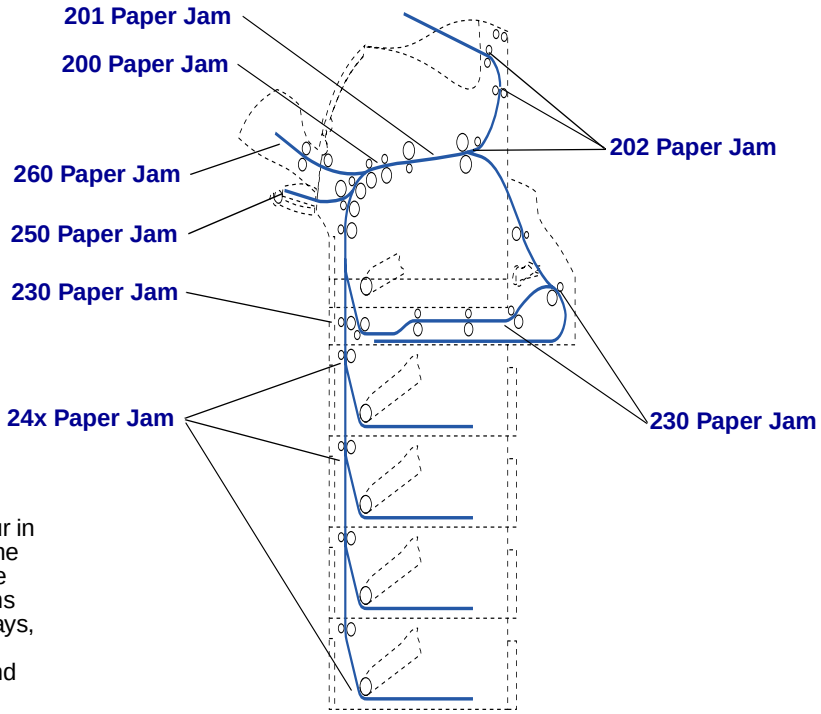

Note: **`24x Paper Jam`** may occur in any of the paper trays, including the 2000-sheet drawer. **x** indicates the tray where the jam is located. Jams can occur between two or three trays, on the incline surface of a tray, or between a tray, the duplex unit, and the printer integrated tray.

Accessing paper jam areas

You open doors and covers and remove paper trays to access paper jam areas. If your printer has a multipurpose feeder, it is visible when the lower front door is opened. The illustration shows the location of paper sources and possible paper jam areas.

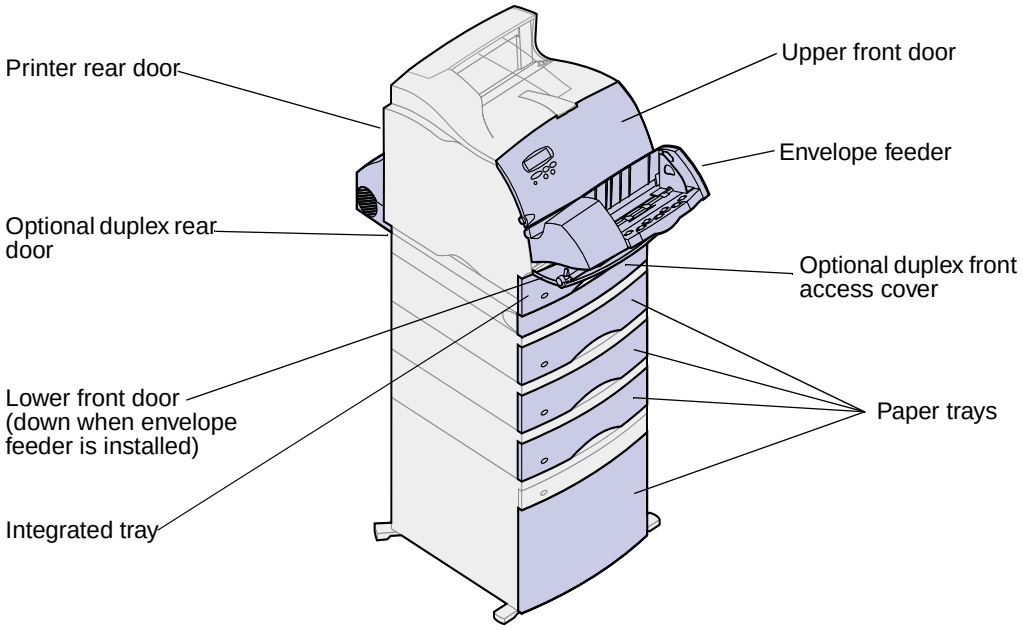

Note: All illustrations in this section show the printer in its standard configuration unless it is necessary to show input or output options.

200 and 201 Paper Jam Remove Cartridge

A **`200 Paper Jam`** message indicates the paper is jammed in the area under the print cartridge. This requires removing the print cartridge from the printer. A **`201 Paper Jam`** message indicates the jam is farther inside the printer.

1 Push the release latch and open the printer upper and lower front doors.

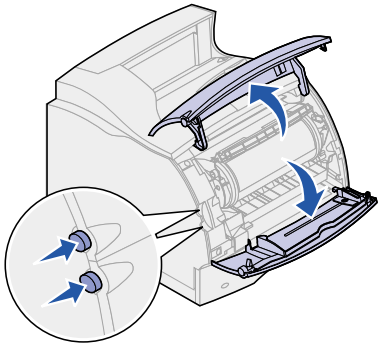

CAUTION: The rear portion of the inside of the printer is hot.

2 While grasping the print cartridge by the hand grip, pull the print cartridge up toward the upper front door, and then pull it straight out toward you. Lay it aside on a sheet of paper.

3 Pull the paper up and toward you and to the right.

Note: If the paper does not move when you pull, stop pulling. You may need to access the paper from the rear door. See **Between the envelope feeder and the printer** for more information.

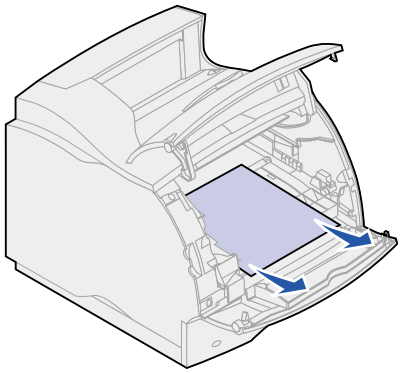

4 Reinstall the print cartridge.

5 Close the upper and lower front doors.

202 Paper Jam
Open Rear Door

Jams that cause a **202 Paper Jam** message require opening the printer rear door.

Note: To resolve the message, you must clear all paper from the paper path.

For instructions on clearing the jam, click the area where the jam occurred:

- **Before reaching the output bin**
- **While exiting to the output bin**

Before reaching the output bin

1 Open the rear door.

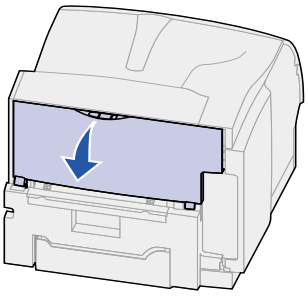

2 Remove the paper based on what part is visible.

– If the middle section of paper is visible, grasp it on both sides and gently pull it straight out.

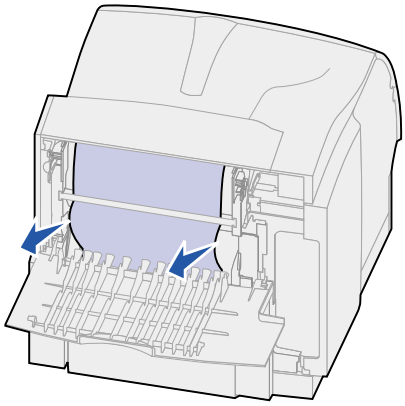

– If paper is still in the fuser area, open the upper front door and remove the paper.
– If the end of the paper is visible, pull the paper straight out.

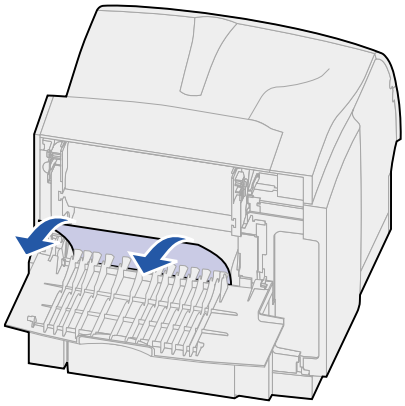

If the paper does not move immediately when you pull, stop pulling. Remove the print cartridge, and then pull the paper out. See **Replacing the print cartridge** for more information.

3 Close the rear door.

While exiting to the output bin

Pull the paper straight out.

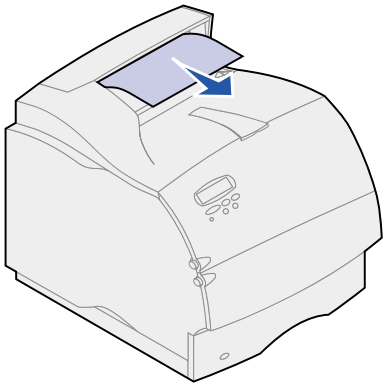

If the paper does not move immediately when you pull, stop pulling. Open the upper front door and pull the paper out.

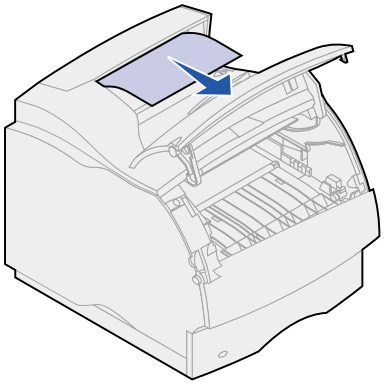

230 Paper Jam
Check Duplex

Jams that cause a **230 Paper Jam** message require opening the duplex front access cover.

Note: To resolve the message, you must clear all paper from the paper path.

1 Open the duplex rear door.

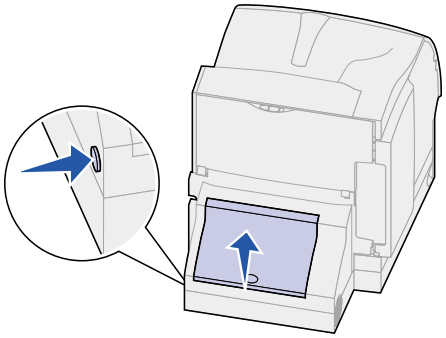

2 Look under the duplex rear door for the edge of the paper to determine how the paper is jammed:

- If a short piece is visible inside the duplex unit next to the inner wall, grasp it and pull it out. If you cannot grasp it, see **step 6**.
- If only a short piece of paper is visible toward the rear of the printer, do not pull it out; it may be easier to access from inside the printer. See **200 and 201 Paper Jam Remove Cartridge** for instructions.
- If most of the paper is visible, continue with the following.

3 Pull the paper up and out toward you:

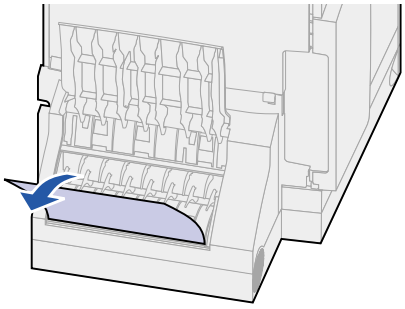

4 Pull down and out if the paper is in this position.

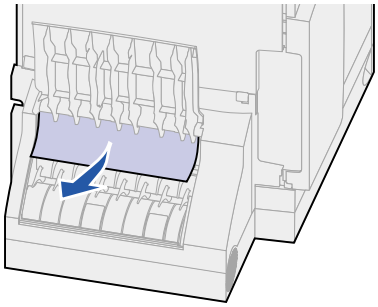

5 Close the duplex rear door. Make sure it *snaps* into place.

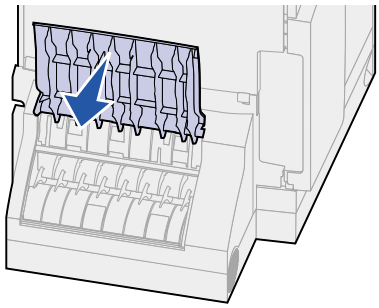

6 Locate the recessed areas on each side of the duplex front access cover.

7 Slowly pull the duplex front access cover straight out.

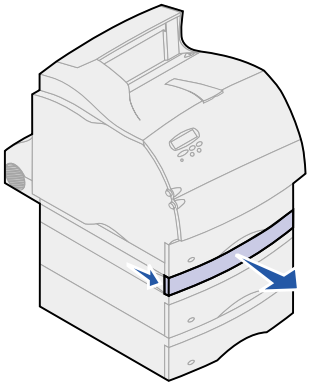

8 If the edge of the paper is visible, pull the paper straight up and out.

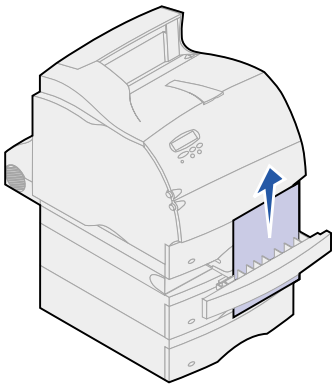

If the paper is not visible, continue with **step 9**. Otherwise, close the duplex front access cover.

9 Slide out the integrated tray.

10 Remove any sheets of paper lying in the duplex front access cover.

Interior view of duplex unit

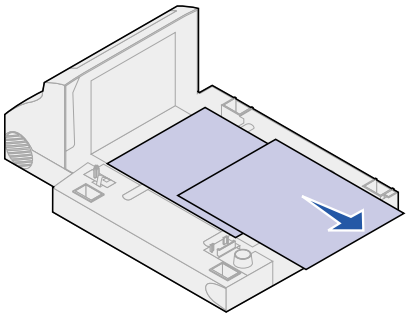

11 Slide the duplex front access cover back into the duplex unit. Make sure it *snaps* into place.

12 Slide the integrated tray back into the printer.

24x Paper Jam
Check Tray x

Jams in four areas result in a **24x Paper Jam** message, where **x** represents the tray number where the jam has occurred.

Note: To resolve the message, you must clear all paper from the paper path.

For instructions on clearing the jam, click the area where the jam occurred:

- **On the incline surface of a tray or between two trays**
- **Between three trays**
  (This may happen if you are using legal-size paper in the trays or if you have an optional 250-sheet drawer installed with other optional drawers.)
- **Between a tray, the duplex unit, and the integrated tray**
- **Between the envelope feeder and the printer**
- **In the 2000-sheet drawer**

On the incline surface of a tray or between two trays

1. Pull the paper tray halfway out of the support unit.
2. Remove the paper based on how it is jammed:
   - If the paper is lying on the incline or wall surface at the front of the tray, pull the paper straight out.

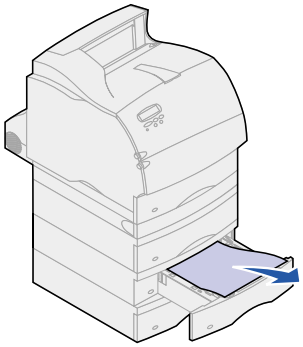

   - If the paper is in the pass-through area between two trays, pull the paper straight up and out.

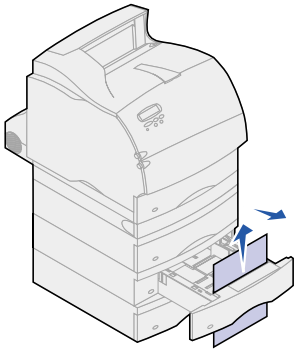

– If you do not see either end of the print material, see **Between three trays** to remove the jam.

3 Slide the paper tray back into the support unit.

Between three trays

This type of jam may occur if you are using legal-size paper in the trays or if you have a 250-sheet drawer installed with other optional drawers.

1 Pull the paper tray out of the support unit. If only a short piece of the paper is visible, do not pull down to remove the paper.

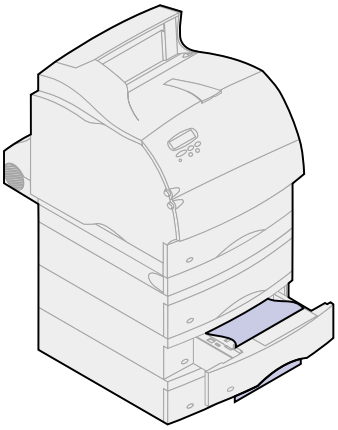

2 Gently slide the paper tray back into the support unit.

3 Pull the paper tray out of the support unit that is above the tray you just closed.

4 Pull the paper either up or down. If it does not pull easily one way, try the other way.

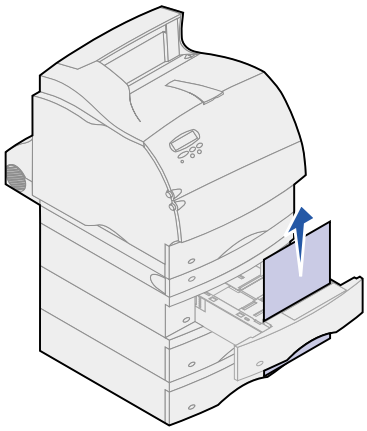

5 Slide the paper tray back into the support unit.

Note: With this type of jam, there may be another jam under the print cartridge. Remove the print cartridge and any jammed paper, and then reinstall the print cartridge. See **Replacing the print cartridge** for more information.

Between a tray, the duplex unit, and the integrated tray

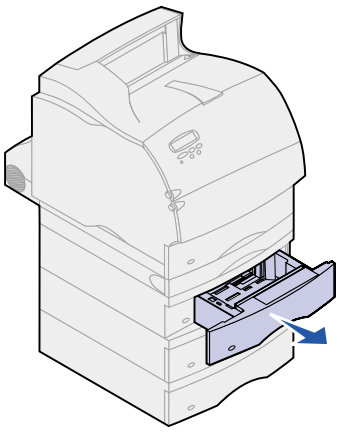

1. Pull the paper tray out of the support unit. If only a short piece of the paper is visible, do not pull down to remove the paper.
2. Slowly pull the duplex front access cover straight out from the duplex unit.

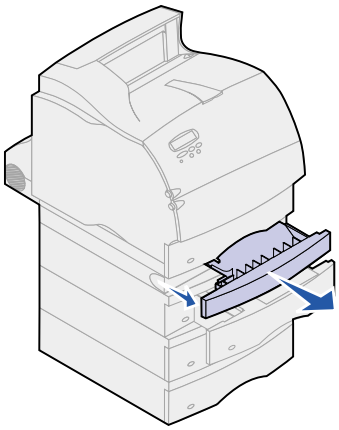

3 Pull the integrated tray out of the printer.

If you see the edge of the paper in the integrated tray:

a Pull the paper down and out.

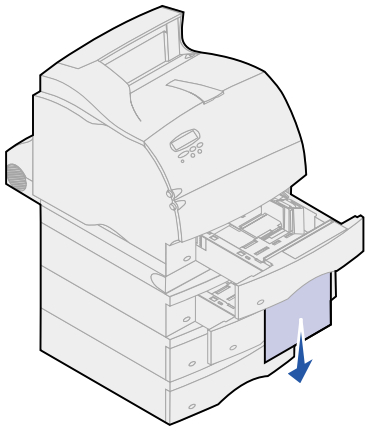

b Slide the tray all the way into the printer.

c Slide the duplex front access cover back into the duplex unit. Make sure it *snaps* into place.

If you do *not* see the edge of the paper in the integrated tray:

a Push the tray back into the printer.

b Open the printer upper and lower front doors.

c Remove the print cartridge. See **Replacing the print cartridge** for more information. You should see the leading edge of the paper now.

d Pull the paper out.

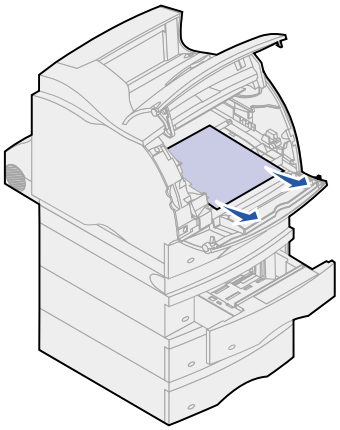

e Reinstall the print cartridge.
Align the slides on the print cartridge with the slots on the print cartridge cradle. Use the colored arrows inside the printer for placement. Guide the print cartridge down as it *snaps* into place.

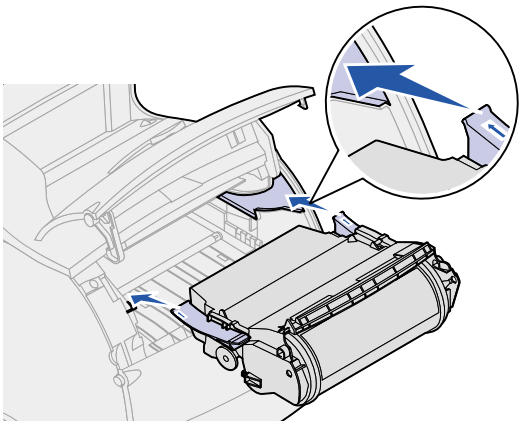

f Close the printer upper and lower front doors.

g Slide the paper tray all the way into the printer.

In the 2000-sheet drawer

1. Open the loading door.
2. Press the elevator down button.
3. Remove the paper jam. Clear all paper from the paper path of the drawer and printer.

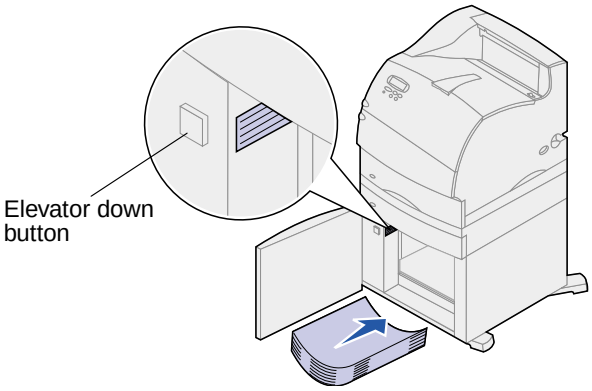

4. Make sure the stack of paper is neat and aligned; otherwise, another paper jam may occur.
5. Close the door.
6. Allow a few seconds for the elevator to reach the top.
7. Press **Go** to resume printing.

250 Paper Jam
Check MP Feeder

Slowly pull the jammed print material straight out of the multipurpose feeder.

Note: To resolve the message, you must clear all paper from the paper path.

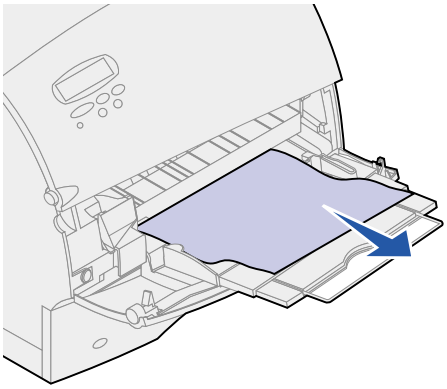

260 Paper Jam
Check Env Feeder

Envelope jams may occur in two areas.

Note: To resolve the message, you must clear all paper from the paper path.

For instructions on clearing the jam, click the area where the jam occurred:

- **At entry into the envelope feeder**
- **Between the envelope feeder and the printer**

At entry into the envelope feeder

Since the envelope feeder feeds envelopes from the bottom of the stack, the envelope on the bottom is jammed.

1. Lift the envelope weight.
2. Flip the envelope weight back toward the printer.
3. Remove the stack of envelopes from the envelope feeder.

4 Slowly pull the jammed envelope straight out toward you.

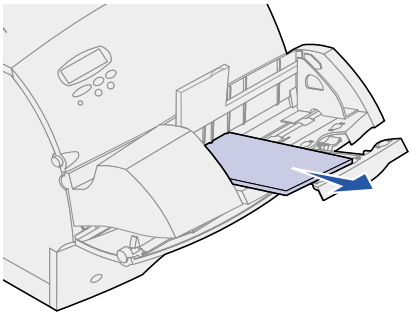

5 Replace the stack of envelopes in the envelope feeder.

6 Adjust the envelope edge guide.

7 Lower the envelope weight to the stack.

Note: If envelope jams continue to occur, repeat these steps and feed a single envelope between steps 4 and 5. This may correct the problem.

Between the envelope feeder and the printer

1 Lift the envelope weight.

2 Flip the envelope weight back toward the printer.

3 Remove the stack of envelopes from the envelope feeder.

4 Push the envelope support to the closed position.

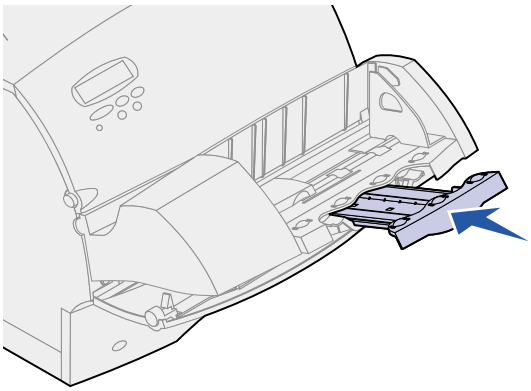

5 Open the printer upper front door.

6 Pull the envelope feeder up slightly and straight out of the printer. Set it aside.

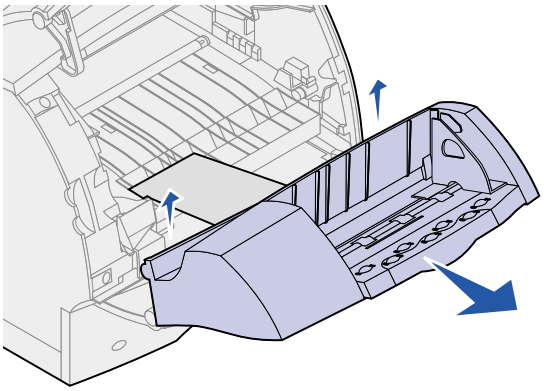

7 Pull the envelope straight out of the printer.

Note: You may have to remove the print cartridge to get the envelope out. See **Replacing the print cartridge** for instructions.

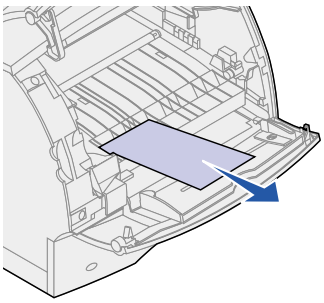

8 Reinstall the envelope feeder. Make sure it *snaps* into place.

9 Close the printer upper front door.

10 Replace the stack of envelopes in the envelope feeder.

11 Adjust the envelope edge guide.

12 Lower the envelope weight to the stack.

24 Solving display problems

If the suggested corrective action does not fix the problem, call your service representative.

Problem	Action
Operator panel displays only diamonds or is blank.	• Turn the printer off, wait about 10 seconds, and turn the printer on. • **`Performing Self Test`** appears on the display. When the test is completed, **`Ready`** is displayed. If the messages do not appear, turn the printer off and call the Lexmark Customer Support Center.
Menu settings changed from the operator panel have no effect.	Settings in the software application, the printer driver, or the printer utilities are overriding the settings made from the operator panel. • Change the menu settings from the printer driver, the printer utilities, or the software application instead of the operator panel. • Disable the settings in the printer driver, the printer utilities, or the software application so you can change settings from the operator panel.

25 Solving printing problems

If the suggested corrective action does not fix the problem, call your service representative.

Problem	Action
Job did not print or incorrect characters printed.	Make sure **Ready** appears on the operator panel before you send a job to print. Press **Go** to return to **Ready**.
	Make sure there is print material loaded in the printer. Press **Go** to return to **Ready**.
	Verify that the printer is using the correct printer language.
	Verify that you are using the correct printer driver.
	Make sure the parallel, serial, ethernet, USB cable is firmly plugged in at the back of the printer. Make sure you are using the correct cable. Use IEEE 1284-compliant parallel cable. We recommend Lexmark part number 1329605 (10 ft) or 1427498 (20 ft). If you use RS-232 Serial, verify that a null modem cable is used.
	If the printer is connected through a switch box, try a direct connection.
	Verify that the correct paper size is selected through the operator panel, in the printer driver, or in the software application.
	Make sure PCL SmartSwitch and PS SmartSwitch are set to On.
Job did not print or incorrect characters printed (continued).	If you are using a print spooler, verify that the spooler is not stalled.
	If you print across a network or on a Macintosh computer, see **Network printing problems**.
	Check the printer interface from the Setup Menu. Determine which host interface you are using. Print a menu settings page to verify that the current interface settings are correct. See **Printing the menu settings page**. If you are using a serial interface: • Make sure Honor DSR is set to Off. • Check the protocol, baud, parity, and data bit settings. The settings on the printer and on the host computer should match.
Printer is connected to the USB port, but will not print.	Make sure you are using Windows 98, Windows 2000, Windows Me, or another USB-capable operating system supported by Lexmark.
Print material misfeeds or multiple feeds occur.	Make sure the print material you are using meets the specifications for your printer. See **Print material specifications** for more details.
	Flex print material before loading it in any of the paper sources.
	Make sure the print material is loaded correctly.

Problem	Action
Print material misfeeds or multiple feeds occur (continued).	Make sure the paper width and length guides on the paper sources are adjusted correctly.
	Do not overfill the paper sources.
	Do not force print material into the multipurpose feeder when you load it; otherwise, it may skew or buckle.
	Remove any curled print material from paper sources.
	Load the recommended print side correctly for the type of print material you are using. See **Loading print material** for more information.
	Load less print material in the paper sources.
	Turn the print material over or around and try printing again to see if feeding improves.
	Do not mix print material types.
	Do not mix reams of print material.
	Remove the top and bottom sheets of a ream before loading the print material.
	Load a paper source only when it is empty.
Envelope misfeeds or multiple feeds occur.	Remove the stack of envelopes from the envelope feeder. Load one envelope, feed it through the printer, and then reload the stack of envelopes in the envelope feeder.
Page breaks in unexpected places.	Check the **Print Timeout** setting in the Setup Menu. Increase the setting.
Job prints from the wrong paper source or on the wrong print material.	Check the **Paper Type** setting in the Paper Menu from the printer operator panel and in the printer driver.
Paper does not stack neatly in the output bin.	• Make sure the paper bail is installed. • Turn the paper stack over in the tray or multipurpose feeder.
Printer does not duplex pages.	• Make sure Duplex is selected in both the Finishing Menu and in the printer driver. • Make sure you have enough printer memory installed.

26 Solving print quality problems

If the suggested corrective action does not fix the problem, call your service representative.

Problem	Action
Print is too light. 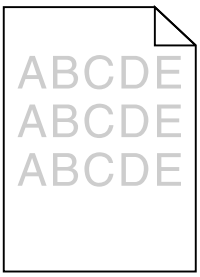 	• The toner may be low. To utilize the remaining toner, remove the cartridge by gripping the handles with both hands. With the cartridge arrows pointing downward, shake the print cartridge back and forth. Reinstall the cartridge and then press **Go**. • Change the **Toner Darkness** setting in the Quality Menu. • If you are printing on an uneven print surface, change the Paper Weight and Paper Texture settings in the Paper Menu. See **Paper Type**. • Verify that the correct print material is being used.
Toner smears or print comes off the page. 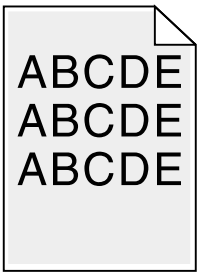 	• If you are printing on an uneven print surface, change the Paper Weight and Paper Texture settings in the Paper Menu. See **Paper Type**. • Verify that the print material is within the printer specifications. See **Print material specifications** for more details. • If the problem continues, call the Lexmark Customer Support Center.
Toner appears on the back of the printed page. 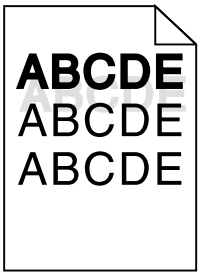 	Toner is on the transfer roll. To help prevent this, do not load print material that is smaller than the page size of the job to be printed. Open and close the printer upper front door to run the printer setup cycle and clean the transfer roll.

Problem	Action
Toner fog or background shading appears on the page. 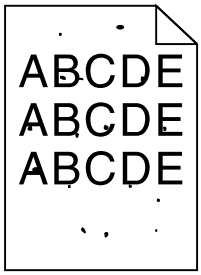	• Check the print cartridge to make sure it is installed correctly. • Change the print cartridge. See **Replacing the print cartridge** for more details. • If the problem continues, change the charge roll. See **Replacing the charge roll** for more details.
Entire page is white. 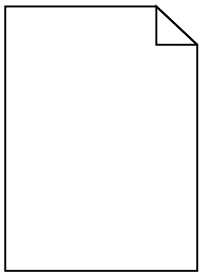	• Make sure the packaging material is removed from the print cartridge. • Check the print cartridge to be sure it is installed correctly. • The toner may be low. To utilize the remaining toner, remove the cartridge by gripping the handles with both hands. With the cartridge arrows pointing downward, shake the print cartridge back and forth. Reinstall the cartridge and then press **Go**.
Streaks appear on the page. 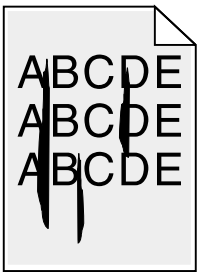	• The toner may be low. To utilize the remaining toner, remove the cartridge by gripping the handles with both hands, and then shake the print cartridge gently back and forth. Reinstall the same print cartridge. • If you are using preprinted forms, make sure the ink can withstand temperatures of 212°C (414°F).
Printing is too dark. 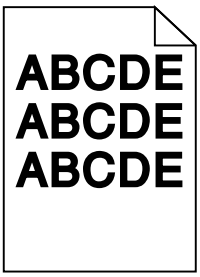	Change the **Toner Darkness** setting in the Quality Menu. **Note:** Macintosh computer users should make sure the lines per inch (lpi) setting is not set too high in the software application.

Problem	Action
Characters have jagged or uneven edges. 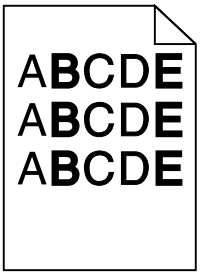 	• Change the **Print Resolution** setting in the Quality Menu to 600 dpi or 1200 dpi. • Turn **PQET** in the Quality Menu to On. • If you are using downloaded fonts, verify that the fonts are supported by the printer, the host computer, and the software application.
Image quality is poor. 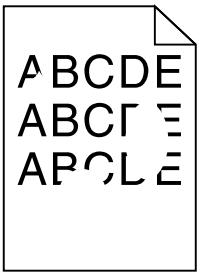	Resolution was automatically reduced. Reduce the complexity of the print job or add additional printer memory. See **Res Reduced**.
Part or all of the page is printed in black. 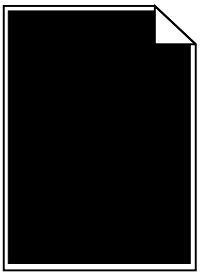	• Check the print cartridge to see if it is installed correctly. • If the charge roll has been replaced, verify that it is installed correctly.
The job prints, but the top and side margins are incorrect. 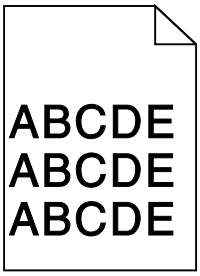 	• Make sure the **Paper Size** setting in the Paper Menu is correct. • Make sure the margins are set correctly in your software application.

27 Solving option problems

If an option does not operate correctly after it is installed or if it quits working:

- Make sure paper options are marked with a colored triangle, indicating they are compatible with your printer.
- Turn the printer off, wait for about 10 seconds, and turn the printer on. If this does not fix the problem, unplug the printer, and check the connection between the option and printer.
- Print the menu settings page and check to see if the option is listed in the Installed Options list. If the option is not listed, reinstall it.
- Make sure the option is selected in the software application you are using.

  For Macintosh computer users: Make sure the printer is set up in Chooser.

Printer options are listed below with suggested corrective actions for related problems. If the suggested corrective action does not fix the problem, call your service representative.

Options	Action
Drawers	• Make sure the connection between drawers (250-sheet drawer, optional 500-sheet drawer, or optional 2000-sheet drawer), or the connection between a drawer and a duplex unit or the printer, is secure. • Make sure the print material is loaded correctly. See **Loading print material** for more details.
Duplex unit	• Make sure the connection between the duplex unit and the printer is secure. If the duplex unit is listed on the menu settings page, but print material jams when it enters or exits the duplex unit, the printer and duplex unit may not be properly aligned. • Make sure the duplex front access cover is securely installed.
Envelope feeder	• Make sure the connection between the envelope feeder and the printer is secure. • Make sure the Paper Size setting is correct in both the Paper Menu and in the software application. • Make sure the envelopes are loaded correctly. See **Loading the envelope feeder** for more details.
Flash memory	Make sure flash memory is securely connected to the printer system board.
Hard disk with adapter	Make sure the hard disk is securely connected to the hard disk adapter card. Also make sure the hard disk adapter card is securely connected to the printer system board.

Options	Action
Infrared adapter	If infrared communication stops or does not occur, make sure: • The distance between the two infrared ports is 1 m (39 in.) or less. If communication does not occur between ports, move the ports closer together. • Both ports are stable. • The computer and the printer are on a level surface. • The angle of communication between the two infrared ports is within 15 degrees of either side of an imaginary line drawn between the two infrared ports. • No bright light, such as direct sunshine, is interfering with communication. No objects are placed between the two infrared ports.
Internal print server	• Make sure the internal print server (also called an internal network adapter or INA) is securely connected to the printer system board. • Make sure you are using the correct cable, that it is securely connected, and that the network software is correctly set up. Refer to the drivers CD for more details.
Printer memory	Check to make sure printer memory is securely connected to the printer system board.
Tri-Port Adapter	• Make sure the Tri-Port Adapter is securely connected to the printer system board. • For Macintosh computer users, make sure the host computer is set to LocalTalk. • If you are using a phone wire connection, use a terminator plug.
USB/Parallel interface	• Make sure the USB/parallel interface card is securely connected to the printer system board. • Make sure you are using the correct cable and that it is securely connected.

28 Solving network printing problems

If a job did not print or incorrect characters printed, verify that the Lexmark internal print server or external print server is set up properly and the network cable is connected.

Note: Refer to the drivers CD for more details.

For Novell users:

- Make sure the netware.drv file is dated October 24, 1994, or later.
- Make sure the NT (no tabs) flag is included in the capture statement.

For Macintosh users:

- The printer may need an optional internal print server to allow Macintosh connection.
- Verify that the printer is set up correctly in Chooser.

29 Resolving other problems and questions

Problem	Action
I need to get updated printer drivers or utilities.	• Refer to the drivers CD that came with your printer which contains printer drivers and utilities. • Visit the Lexmark Web site, **www.lexmark.com**, for the most current printer drivers or utilities.
I need to attache a serial cable to the printer.	If you have installed an optional interface card in your printer, refer to the *Setup Guide*.
I can't find the printer escape codes.	Refer to the *Technical Reference* available on the drivers CD or at the Lexmark Web site, **www.lexmark.com**.

30 Understanding printer messages

The printer operator panel displays messages describing the current state of the printer and indicates possible printer problems you must resolve. This topic provides a list of all printer messages, explains what they mean, and tells you how to clear the messages.

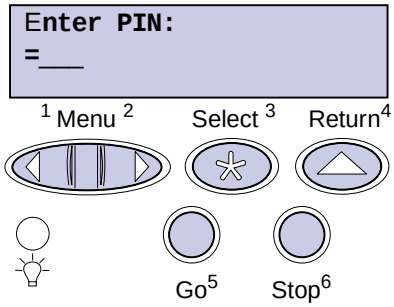

Click a letter or number at the bottom of the page to locate information about a message beginning with that character.

A

Activating Menu Changes

B

Busy

C

Canceling Job

Check <device> Connection

Clearing Job Accounting Stat

Close Door or Insert Cartridge

D

Defragmenting

Delete All Jobs Go/Stop?

Deleting Jobs

Disabling Menus

Disk Corrupted. Reformat?

Disk Recovery

E

Enabling Menus

Enter PIN: =___

F

Flushing Buffer

Formatting Disk

Formatting Flash

G

H

Held Jobs may be lost.

I

Infrared <x>

Insert Tray <x>

Install <device> or Cancel Job

Invalid Network <x> Code

Invalid Standard Network Code

J

K

L

Load Manual

Load Tray <x>

LocalTalk <x>

M

Menus Disabled

N

Network Card Busy

Network <x>

Network <x><y>

No Jobs Found. Retry?

Not Ready

O

P

Parallel <x>

Performing Self Test

Power Saver

Print Jobs on Disk. Go/ Stop?

Printing Directory List

Printing Font List

Printing Job Accounting Stat

Printing Menu Settings

Prog Engine Code

Prog System Code

Program Flash

Programming Disk

Q

Queuing and Deleting Jobs

Queuing Jobs

R

Ready

Ready Hex

Reattach <device>

Res Reduced

Resetting the Printer

Resetting Maint Cnt Value

Restoring Factory Defaults

S

Serial <x>

T

Toner Low

Tray <x> Empty

Tray <x> Low

Tray <x> Missing

U

USB <x>

V

W

Waiting

X

Y

Z

0

1

2

2<xx> Paper Jam

3

31 Defective Print Cartridge

32 Unsupported
Print Cartridge

34 Short Paper

35 Res Save Off
Deficient Memory

37 Insufficient
Collation Area

37 Insufficient
Defrag Memory

37 Insufficient Memory

38 Memory Full

39 Complex Page

4

5

51 Defective Flash

52 Flash Full

53 Unformatted Flash

54 Serial Option <x> Error

54 Network <x>
Software Error

54 Par <x> ENA
Connection Lost

54 Parallel Error

54 Parallel Option <x> Error

54 Std Network
Software Error

54 Std Par ENA
Connection Lost

56 Parallel
Port <x> Disabled

56 Std Parallel
Port Disabled

56 Serial Port <x> Disabled

58 Too Many Disks Installed

58 Too Many Flash Options

58 Too Many Trays Attached

59 Incompatible <device>

6

61 Defective Disk

62 Disk Full

63 Unformatted Disk

7

70–79 <message>

8

80 Scheduled Maintenance

81 Engine Code
CRC Failure

88 Toner Low

9

900–999 Service
<message>

Activating Menu Changes

What this message means:

The printer is activating changes made to the printer settings.

What you can do:

Wait for the message to clear.

Busy

What this message means:

The printer is busy receiving, processing, or printing data.

What you can do:

- Wait for the message to clear.
- Press **Menu** to open the Job Menu and cancel the current job.

See also:

Cancel Job

Canceling Job

What this message means:

The printer is processing a request to cancel the current print job.

What you can do:

Wait for the message to clear.

Check <device> Connection

What this message means:

The specified device is either not fully connected to the printer or is experiencing a hardware failure.

What you can do:

- Reestablish communication by removing the specified device and reattaching it to the printer.
- Press **Go** to clear the message and continue printing.
- If a hardware failure occurs, turn the printer off and back on. If the error recurs, turn the printer off, remove the specified device, and call for service.

Clearing Job Accounting Stat

What this message means:

The printer is deleting all job statistics stored on the hard disk.

What you can do:

Wait for the message to clear.

Close Door or Insert Cartridge

What this message means:

The upper front door is open or the toner cartridge is not installed.

What you can do:

- Close the upper front door.
- Install the toner cartridge.

Defragmenting

What this message means:

The printer is defragmenting the flash memory to reclaim storage space occupied by deleted resources.

What you can do:

Wait for the message to clear. No button actions are possible while this message is displayed.

WARNING: Do not turn the printer off while this message is displayed.

Delete All Jobs Go/Stop?

What this message means:

The printer is requesting confirmation to delete all held jobs.

What you can do:

- Press **Go** to continue. The printer deletes all held jobs.
- Press **Stop** to cancel the operation.

Deleting Jobs

What this message means:

The printer is deleting one or more held jobs.

What you can do:

Wait for the message to clear.

Disabling Menus

What this message means:

The printer is responding to a request to disable the menus.

What you can do:

Wait for the message to clear.

Note: While the menus are disabled, you cannot change the printer settings from the operator panel.

See also:

Disabling operator panel menus

Disk Corrupted. Reformat?

What this message means:

The printer has attempted a disk recovery process and cannot repair the disk. The disk cannot be used unless it is reformatted.

What you can do:

- Press **Go**. All disk data will be lost when the disk is reformatted.
- Press **Stop** to clear the message without reformatting the disk. **`Disk Recovery`** may be displayed again and the printer will attempt to recover the disk.

See also:

Disk Recovery

Disk Recovery

What this message means:

The printer is attempting to recover the hard disk after finding errors on it. The disk recovery takes place in five phases. The second line on the display shows the percent complete of the current phase.

Note: Errors can occur if the printer is powered off while writing to the disk.

What you can do:

- Wait for the message to clear. No button actions are possible while this message is displayed.
- To avoid this error in the future, do not turn off the printer unless **Ready** is displayed.

Enabling Menus

What this message means:

The printer is responding to a request to make the menus available to all users.

What you can do:

Wait for the message to clear, and then press **Menu** to view the menus from the operator panel.

See also:

Disabling operator panel menus

Enter PIN:
=___

What this message means:

The printer is waiting for you to enter your four-digit personal identification number (PIN).

What you can do:

Use the operator panel buttons to enter the PIN you identified in the driver when you sent the confidential job to the printer.

See also:

Confidential jobs

Flushing Buffer

What this message means:

The printer is flushing corrupted print data and discarding the current print job.

What you can do:

Wait for the message to clear.

Formatting Disk

What this message means:

The printer is formatting the hard disk. Since formatting the disk may take longer in some cases, the second line shows the percent complete.

What you can do:

Wait for the message to clear.

WARNING: Do not turn the printer off while this message is displayed.

Formatting Flash

What this message means:

The printer is formatting the flash memory.

What you can do:

Wait for the message to clear.

WARNING: Do not turn the printer off while this message is displayed.

Held Jobs may be lost.

What this message means:

The printer memory is too full to continue processing print jobs.

What you can do:

- Press **Go** to clear the message and continue printing. The printer frees memory by deleting the oldest held job and continues deleting held jobs until there is enough printer memory to process the job.
- To avoid this error in the future:
  - Delete fonts, macros, and other data stored in printer memory.
  - Install more printer memory.

Note: The messages **37 Insufficient Memory** and **Held Jobs may be lost** alternate on the display.

Infrared <x>

What this message means:

An infrared interface is the active communication link.

Insert Tray <x>

What this message means:

The specified tray is either missing or not fully inserted.

What you can do:

Insert the specified tray completely.

Install <*device*> or Cancel Job

What this message means:

The printer is requesting that a specified device be installed so it can print a job.

What you can do:

- Turn the printer off, install the specified device, and restart the printer.
- Press **Menu** to open the Job Menu and cancel the current job.

See also:

Setup Guide

Invalid Network <x> Code

Invalid Standard Network Code

What this message means:

The code in an internal print server is not valid. The printer cannot receive and process jobs until valid code is programmed into the internal print server.

What you can do:

Download valid code to the printer internal print server. No button actions are possible while this message is displayed.

Note: You can download network code while this message is displayed.

See also:

Technical Reference

Load Manual

What this message means:

A request for a manual feed job has been sent to the printer. The printer is ready for insertion of a single sheet into the manual feed slot.

What you can do:

- Load a sheet of the paper specified on the second line of the display in the multipurpose feeder.
- Press **Select** or **Go** to ignore the manual feed request and print on paper already installed in one of the input sources. If the printer finds a tray that has paper of the correct type and size, it feeds paper from that tray. If the printer cannot find a tray with the correct paper type and size, it prints on whatever paper is installed in the default input source.
- Press **Menu** to open the Job Menu and cancel the current job.

See also:

Loading the multipurpose feeder

Load Tray <x>

What this message means:

The printer is trying to feed paper from a source it detects is empty.

What you can do:

- Load paper of the size and type requested on the second line of the display in the specified tray. The printer automatically clears the message and continues printing the job.
- Press **Menu** to open the Job Menu and cancel the current job.

LocalTalk <x>

What this message means:

A LocalTalk interface is the active communication link.

Menus Disabled

What this message means:

The printer menus are disabled. You cannot change the printer settings from the operator panel.

What you can do:

You can still open the Job Menu to cancel a job that is printing or to select a confidential job or a held job that you want to print. If you need access to the printer menus, contact your network administrator.

Network Card Busy

What this message means:

An internal print server (also called an internal network adapter or INA) is being reset.

What you can do:

Wait for the message to clear.

Network <x>

What this message means:

A network interface is the active communication link.

Network <x><y>

What this message means:

A network interface is the active communication link, where <x> represents the active communication link and <y> represents the channel.

No Jobs Found. Retry?

What this message means:

The four-digit personal identification number (PIN) you entered is not associated with any confidential print job.

What you can do:

- Press **Go** to enter another PIN.
- Press **Stop** to clear the PIN entry prompt.

Not Ready

What this message means:

The printer is not ready to receive or process data. Someone pressed **Stop** to take the printer offline.

What you can do:

Press **Go** to make the printer ready to receive jobs.

Parallel <x>

What this message means:

A parallel interface is the active communication link.

Performing Self Test

What this message means:

The printer is running the series of start-up tests it performs after it is turned on.

What you can do:

Wait for the message to clear.

Power Saver

What this message means:

The printer is ready to receive and process data. It is reducing its electricity consumption while idle. If the printer remains inactive for the period of time specified in the Power Saver menu item, the **Power Saver** message replaces the **Ready** message.

What you can do:

- Send a job to print.
- Press **Go** to quickly warm the printer to normal operating temperature and display the **Ready** message.

Print Jobs on Disk. Go/Stop?

What this message means:

Jobs that were spooled to the hard disk before the printer was last turned off have not yet printed.

What you can do:

- Press **Go** to print the jobs.
- Press **Return** or **Stop** to delete the jobs from the hard disk without printing them.

Printing Directory List

What this message means:

The printer is processing or printing a directory of all files stored in flash memory or on a hard disk.

What you can do:

Wait for the message to clear.

Printing Font List

What this message means:

The printer is processing or printing a list of all available fonts for the specified printer language.

What you can do:

Wait for the message to clear.

Printing Job Accounting Stat

What this message means:

The printer is processing or printing all job accounting statistics stored on the hard disk.

What you can do:

Wait for the message to clear.

Printing Menu Settings

What this message means:

The printer is processing or printing the menu settings page.

What you can do:

Wait for the message to clear.

Prog Engine Code

What this message means:

The printer is programming new code into the flash memory.

What you can do:

Wait for the message to clear.

WARNING: Do not turn the printer off while this message is displayed.

Prog System Code

What this message means:

The printer is programming new system code.

What you can do:

Wait for the message to clear and the printer to reset.

WARNING: Do not turn the printer off while this message is displayed.

Program Flash

What this message means:

The printer is storing resources, such as fonts or macros, in flash memory.

What you can do:

Wait for the message to clear.

WARNING: Do not turn the printer off while this message is displayed.

Programming Disk

What this message means:

The printer is storing resources, such as fonts or macros, on the hard disk.

What you can do:

Wait for the message to clear.

WARNING: Do not turn the printer off while this message is displayed.

Queuing and Deleting Jobs

What this message means:

The printer is deleting one or more held jobs and sending one or more jobs to print.

What you can do:

Wait for the message to clear.

Queuing Jobs

What this message means:

The printer is sending one or more held jobs to print.

What you can do:

Wait for the message to clear.

Ready

What this message means:

The printer is ready to receive and process print jobs.

What you can do:

Send a job to print.

Ready Hex

What this message means:

The printer is in Hex Trace mode and is ready to receive and process print jobs.

What you can do:

- Send a job to print. All data sent to the printer is printed in hexadecimal and character representation. Control strings are printed, not executed.
- Turn the printer off and then on to exit Hex Trace mode and return to Ready status.
- Reset the printer.

Reattach <device>

What this message means:

The specified device is either not fully connected to the printer or is experiencing a hardware failure.

What you can do:

- Reestablish communication by removing the specified device and reattaching it to the printer.
- Press **Go** to clear the message and continue printing without using the device.
- If a hardware failure occurs, turn the printer off and back on. If the error recurs, turn the printer off, remove the specified device, and call for service.

Res Reduced

What this message means:

The printer is reducing the resolution of a page in the current job from 600 dots per inch (dpi) to 300 dpi to prevent a **38 Memory Full** error. **Res Reduced** remains on the display while the job prints.

What you can do:

Press **Menu** to open the Job Menu and cancel the current job.

Resetting the Printer

What this message means:

The printer is resetting to the current default settings. Any active print jobs are canceled.

What you can do:

Wait for the message to clear.

Resetting Maint Cnt Value

What this message means:

The printer is resetting the counter that tracks wear on the fuser.

What you can do:

Wait for the message to clear.

Restoring Factory Defaults

What this message means:

The printer is restoring the factory default printer settings. When factory default settings are restored:

- All downloaded resources (fonts, macros, symbol sets) in the printer memory are deleted.
- All menu settings return to the factory default setting *except*:
  - The Display Language setting in the Setup Menu.
  - All settings in the Parallel Menu, Serial Menu, Network Menu, Infrared Menu, LocalTalk Menu, and USB Menu.

What you can do:

Wait for the message to clear.

Serial <x>

What this message means:

A serial interface is the active communication link.

Std Bin Full

What this message means:

The standard output bin is full.

What you can do:

Remove the stack of paper in the bin to clear the message.

Toner Low

What this message means:

The print cartridge is low on toner.

What you can do:

- To utilize the remaining toner, remove the cartridge by gripping the handles with both hands. With the cartridge arrows pointing downward, shake the print cartridge back and forth. Reinstall the cartridge and then press **Go**.
- Press **Go** to clear the message and continue printing. You may notice reduced print quality.
- Replace the print cartridge.

Tray <x> Empty

What this message means:

The specified tray is out of paper.

What you can do:

Load paper in the tray to clear the message.

Tray <x> Low

What this message means:

The specified tray is low on paper.

What you can do:

Add paper to the tray to clear the message.

Tray <x> Missing

What this message means:

The specified tray is either missing or not fully inserted into the printer.

What you can do:

Insert the tray completely into the printer.

USB <x>

What this message means:

The printer is processing data through the specified USB port.

Waiting

What this message means:

The printer has received a page of data to print but is waiting for an End of Job command, a Form Feed command, or additional data.

What you can do:

- Press **Go** to print the contents of the buffer.
- Press **Menu** to open the Job Menu and cancel the current job.

2<xx> Paper Jam

What this message means:

The printer detects a paper jam. Although the location of the paper jam appears on the second line of the display, you must clear paper from the entire paper path.

What you can do:

Clear the paper path.

31 Defective Print Cartridge

What this message means:

A defective print cartridge is installed.

What you can do:

Remove the print cartridge and install a new one.

32 Unsupported Print Cartridge

What this message means:

An unsupported print cartridge is installed.

What you can do:

Remove the print cartridge and install a supported one.

See also:

Replacing the print cartridge

34 Short Paper

What this message means:

The printer has determined that the length of the paper in the source specified on the second line of the display is too short to print the formatted data. For auto-size sensing trays, this error occurs if the paper guides are not in the correct position.

What you can do:

- Press **Go** to clear the message and continue printing. The printer does not automatically reprint the page that prompted the message.
- Make sure the Paper Size setting in the Paper Menu is correct for the size paper you are using. If MP Feeder Size is set to Universal, make sure your paper is large enough for the formatted data.
- Press **Menu** to open the Job Menu and cancel the current job.

35 Res Save Off Deficient Memory

What this message means:

The printer lacks the memory needed to enable Resource Save. This message usually indicates too much memory is allocated for one or more of the printer link buffers.

What you can do:

- Press **Go** to disable Resource Save and continue printing.
- To enable Resource Save after you get this message:
  - Make sure the link buffers are set to Auto, and exit the menus to activate the link buffer changes.
  - When **Ready** is displayed, enable Resource Save from the Setup Menu.
- Install additional memory.

37 Insufficient Collation Area

What this message means:

The printer memory (or hard disk, if installed) does not have the free space necessary to collate the print job.

What you can do:

- Press **Go** to print the portion of the job already stored and begin collating the rest of the job.
- Press **Menu** to open the Job Menu and cancel the current job.

37 Insufficient Defrag Memory

What this message means:

The printer cannot defragment flash memory, because the printer memory used to store undeleted flash resources is full.

What you can do:

- Delete fonts, macros, and other data in printer memory.
- Install additional printer memory.

37 Insufficient Memory

What this message means:

The printer memory is full and cannot continue processing current print jobs.

What you can do:

- Press **Go** to clear the message and continue the current print job. The printer frees memory by deleting the oldest held job and continues deleting held jobs until there is enough printer memory to process the job.
- To avoid this error in the future:
  - Delete fonts, macros, and other data in printer memory.
  - Install additional printer memory.

Note: The messages **`37 Insufficient Memory`** and **`Held Jobs may be lost`** alternate on the display.

38 Memory Full

What this message means:

The printer is processing data, but the memory used to store pages is full.

What you can do:

- Press **Go** to clear the message and continue printing the job. The job may not print correctly.
- Press **Menu** to open the Job Menu and cancel the current job.
- To avoid this error in the future:
  - Simplify the print job by reducing the amount of text or graphics on a page and deleting unnecessary downloaded fonts or macros.
  - Install additional printer memory.

39 Complex Page

What this message means:

The page may not print correctly because the print information on the page is too complex.

What you can do:

- Press **Go** to clear the message and continue printing the job. The job may not print correctly.
- Press **Menu** to open the Job Menu and cancel the current job.
- To avoid this error in the future:
  - Reduce the complexity of the page by reducing the amount of text or graphics on the page and deleting unnecessary downloaded fonts or macros.
  - Set Page Protect to On in the Setup Menu.
  - Install additional printer memory.

51 Defective Flash

What this message means:

The printer detects defective flash memory.

What you can do:

Press **Go** to clear the message and continue printing. You must install different flash memory before you can download any resources to flash.

52 Flash Full

What this message means:

There is not enough free space in the flash memory to store the data you are trying to download.

What you can do:

- Press **Go** to clear the message and continue printing. Downloaded fonts and macros not previously stored in flash memory are deleted.
- Delete fonts, macros, and other data stored on the flash memory.
- Install flash memory with more storage capacity.

53 Unformatted Flash

What this message means:

The printer detects unformatted flash memory.

What you can do:

- Press **Go** to clear the message and continue printing. You must format the flash memory before you can store any resources on it.
- If the error message remains, the flash memory may be defective and require replacing.

54 Serial Option <x> Error

What this message means:

The printer has detected a serial interface error on a serial port.

What you can do:

- Make sure the serial link is set up correctly and you are using the appropriate cable.
- Press **Go** to clear the message and continue printing. The job may not print correctly.
- Press **Menu** to open the Job Menu and reset the printer.

54 Network <x> Software Error

54 Std Network Software Error

What these messages mean:

The printer cannot establish communications with an installed network port.

What you can do:

- Press **Go** to clear the message and continue printing. The job may not print correctly.
- Program new firmware for the network interface by way of the USB or parallel port.
- Press **Menu** to open the Job Menu and reset the printer.

54 Std Par ENA Connection Lost

54 Par <x> ENA Connection Lost

What this message means:

The printer has lost the connection to an external print server (also called an external network adapter or ENA).

What you can do:

- Make sure the cable connecting the ENA and the printer is securely attached. Turn the printer off and then on to reset the printer.
- Press **Go** to clear the message. The printer erases any reference to the ENA and then resets.

54 Parallel Error

54 Parallel Option <x> Error

What this message means:

The printer has detected a protocol error on a parallel interface.

What you can do:

- Press **Go** to clear the message and continue printing. The job may not print correctly.
- Make sure the cable connecting the printer and the computer is securely attached and that the cable is not defective.
- Reset the printer.

56 Parallel Port <x> Disabled

56 Std Parallel Port Disabled

What this message means:

Data has been sent to the printer through a parallel port, but the parallel port is disabled.

What you can do:

- Press **Go** to clear the message. The printer discards any data received through the parallel port.
- Make sure the Parallel Buffer menu item in the Parallel Menu is not set to Disabled.

56 Serial Port <x> Disabled

What this message means:

Data has been sent to the printer through a serial port, but the serial port is disabled.

What you can do:

- Press **Go** to clear the message. The printer discards any data received through the serial port.
- Make sure the Serial Buffer menu item in the Serial Menu is not set to Disabled.

58 Too Many Disks Installed

What this message means:

Too many hard disks are installed on the printer. The printer only supports one hard disk at a time.

What you can do:

Turn off and unplug the printer. Remove the excess hard disks from the printer. Plug in the printer and turn it on.

58 Too Many Flash Options

What this message means:

Too many flash memory options are installed on the printer.

What you can do:

Turn off and unplug the printer. Remove the excess flash memory. Plug in the printer and turn it on.

58 Too Many Trays Attached

What this message means:

Too many drawers with matching trays are installed on the printer.

What you can do:

Turn off and unplug the printer. Remove the additional drawers. Plug in the printer and turn it on.

59 Incompatible <device>

What this message means:

The printer detects that an incompatible device is installed.

What you can do:

Remove the specified device.

61 Defective Disk

What this message means:

The printer detects a defective hard disk.

What you can do:

- Press **Go** to clear the message and continue printing.
- Install a different hard disk before you perform any operations that require one.

62 Disk Full

What this message means:

There is not enough memory on the hard disk to store the data sent to the printer.

What you can do:

- Press **Go** to clear the message and continue processing. Any information not previously stored on the hard disk is deleted.
- Delete fonts, macros, and other data stored on the hard disk.

63 Unformatted Disk

What this message means:

The printer detects an unformatted hard disk.

What you can do:

- Press **Go** to clear the message and continue printing.
- Format the disk before performing any disk operations. To format the disk, select Format Disk from the Utilities Menu.
- If the error message remains, the hard disk may be defective and require replacing. Install a new hard disk and format it.

70–79 <message>

What these messages mean:

Messages labeled 70–79 identify problems related to the internal print server.

What you can do:

Refer to the drivers CD for more information. Click **View Documentation**, and then click **MarkNet™ Print Servers**.

80 Scheduled Maintenance

What this message means:

The printer requires replacement of routine maintenance items to maintain top performance and avoid print quality and paper feed problems.

What you can do:

Replace the maintenance items and reset the printer maintenance counter, if necessary.

81 Engine Code CRC Failure

What this message means:

Microcode in the engine flash code module has failed a system check.

What you can do:

Press **Go** to clear the message and discard the code. Retransmit the microcode data from the host computer.

88 Toner Low

What this message means:

The print cartridge is low on toner.

What you can do:

- To utilize the remaining toner, remove the cartridge by gripping the handles with both hands. With the cartridge arrows pointing downward, shake the print cartridge back and forth. Reinstall the cartridge and then press **Go**.
- Press **Go** to clear the message and continue printing. You may notice reduced print quality.
- Replace the print cartridge.

900–999 Service <message>

What these messages mean:

Messages labeled 900–999 relate to printer problems that may require printer service.

What you can do:

Turn the printer off and check all cable connections. Turn the printer back on. If the service message recurs, call for service and report the message number and description of the problem.

31 Using printer menus

Select a menu from the following list for more information. Or, click a letter in the index at the bottom of the page to find a specific menu item that starts with that letter.

Click here for a one-page overview of all the menus and their menu items.

- **Finishing Menu**
- **Infrared Menu**
- **Job Menu**
- **LocalTalk Menu**
- **Network Menu**
- **Paper Menu**
- **Parallel Menu**
- **PCL Emul Menu**
- **PostScript Menu**
- **Quality Menu**
- **Serial Menu**
- **Setup Menu**
- **USB Menu**
- **Utilities Menu**

Select a menu or menu item for more details.

Finishing Menu
Duplex
Duplex Bind
Copies
Blank Pages
Collation
Separator Sheets
Separator Source
Multipage Print
Multipage Order
Multipage View
Multipage Border

Infrared Menu
Infrared Port
PCL SmartSwitch
PS SmartSwitch
NPA Mode
Infrared Buffer
Job Buffering
Window Size
Transmit Delay
Max Baud Rate

Job Menu
Cancel Job
Reset Printer
Print Buffer
Confidential Job
Held Jobs

LocalTalk Menu
LocalTalk Port
PCL SmartSwitch
PS SmartSwitch
NPA Mode
LocalTalk Buffer
Job Buffering
NPA Hosts
LocalTalk Name
LocalTalk Addr

Network Menu
PCL SmartSwitch
PS SmartSwitch
NPA Mode
Network Buffer
Job Buffering
Network <x> Setup

Paper Menu
Paper Source
Paper Size
Paper Type
Custom Types
Substitute Size
Configure MP
Envelope Enhance
Paper Texture
Paper Weight
Paper Loading
Universal Setup

Parallel Menu
PCL SmartSwitch
PS SmartSwitch
NPA Mode
Parallel Buffer
Job Buffering
Advanced Status
Protocol
Honor Init
Parallel Mode 1
Parallel Mode 2

PCL Emul Menu
Font Source
Font Name
Point Size
Pitch
Symbol Set
Orientation
Lines per Page
A4 Width
Auto CR after LF
Auto LF after CR
Tray Renumber

Setup Menu
Printer Language
Power Saver
Resource Save
Download Target
Print Timeout
Auto Continue
Wait Timeout
Jam Recovery
Page Protect
Display Language
Alarm Control
Toner Alarm
Job Accounting

Serial Menu
PCL SmartSwitch
PS SmartSwitch
NPA Mode
Serial Buffer
Job Buffering
RS-232/RS-422
RS-422 Polarity
Serial Protocol
Robust XON
Baud
Data Bits
Parity
Honor DSR

PostScript Menu
Print PS Error
Font Priority

Quality Menu
PictureGrade
Print Resolution
PQET
Toner Darkness

USB Menu
PCL SmartSwitch
PS SmartSwitch
MAC Binary PS
NPA Mode
USB Buffer
Job Buffering

Utilities Menu
Print Menus
Print Net <x> Setup
Print Fonts
Print Directory
Factory Defaults
Format Flash
Defragment Flash
Format Disk
Job Acct Stat

A

A4 Width

Advanced Status

Alarm Control

Auto Continue

Auto CR after LF

Auto LF after CR

B

Baud

Blank Pages

C

Cancel Job

Collation

Confidential Job

Configure MP

Copies

Custom Types

D

Data Bits

Defragment Flash

Display Language

Download Target

Duplex

Duplex Bind

E

Envelope Enhance

F

Factory Defaults

Finishing Menu

Font Name

Font Priority

Font Source

Format Disk

Format Flash

G

H

Held Jobs

Hex Trace

Honor DSR

Honor Init

I

Infrared Buffer

Infrared Port

Infrared Menu

J

Jam Recovery

Job Accounting

Job Acct Stat

Job Buffering
- Parallel Menu
- Serial Menu
- Network Menu
- Infrared Menu
- LocalTalk Menu
- USB Menu

Job Menu

K

L

Lines per Page

LocalTalk Addr

LocalTalk Buffer

LocalTalk Menu

LocalTalk Name

LocalTalk Port

LocalTalk Zone

M

MAC Binary PS
- Network Menu
- USB Menu

Max Baud Rate

Multipage Border

Multipage Order

Multipage Print

Multipage View

N

Network Buffer

Network Menu

Network <x> Setup

NPA Hosts

NPA Mode
- Parallel Menu
- Serial Menu
- Network Menu
- Infrared Menu
- LocalTalk Menu
- USB Menu

O

Orientation

P

Page Protect

Paper Loading

Paper Menu

Paper Size

Paper Source

Paper Texture

Paper Type

Paper Weight

Parallel Buffer

Parallel Menu

Parallel Mode 1

Parallel Mode 2

Parity

PCL SmartSwitch
- Parallel Menu
- Serial Menu
- Network Menu
- Infrared Menu
- LocalTalk Menu
- USB Menu

PCL Emul Menu

PictureGrade

Pitch

Point Size

PostScript Menu

Power Saver

PQET

Print Buffer

Print Directory

Print Fonts

Print Menus

Print Net <x> Setup

Print PS Error

Print Resolution

Print Timeout

Printer Language

Protocol

PS SmartSwitch
- Parallel Menu
- Serial Menu
- Network Menu
- Infrared Menu
- LocalTalk Menu
- USB Menu

Q

Quality Menu

R

Reset Printer

Resource Save

Robust XON

RS-422 Polarity

RS-232/RS-422

S

Separator Sheets

Separator Source

Serial Buffer

Serial Menu

Serial Protocol

Setup Menu

Substitute Size

Symbol Set

T

Toner Darkness

Toner Alarm

Transmit Delay

Tray Renumber

U

Universal Setup

USB Buffer

USB Menu

Utilities Menu

V

W

Wait Timeout

Window Size

X

Y

Z

32 Finishing Menu

Use the Finishing Menu to define how the printer delivers the printed output.

Select a menu item for more details:

- **Blank Pages**
- **Collation**
- **Copies**
- **Duplex**
- **Duplex Bind**
- **Multipage Border**
- **Multipage Order**
- **Multipage Print**
- **Multipage View**
- **Separator Sheets**
- **Separator Source**

Note: Values marked by an asterisk are the factory default settings.

Blank Pages

Purpose:

To specify whether to include application-generated blank pages as part of your printed output.

Values:

Do Not Print*	Does not print application-generated blank pages as part of your job.
Print	Prints application-generated blank pages as part of your job.

Collation

Purpose:

To keep the pages of a print job stacked in sequence, particularly when printing multiple copies of the job.

Values:

Off* Prints each page of a job the number of times specified by the Copies menu item. For example, if you set Copies to 2 and send three pages to print, the printer prints page 1, page 1, page 2, page 2, page 3, page 3.

On Prints entire job the number of times specified by the Copies menu item. For example, if you set Copies to 2 and send three pages to print, the printer prints page 1, page 2, page 3, page 1, page 2, page 3.

Copies

Purpose:

To set the number of copies you want for the printer default value. (Set the number of copies required for a specific job from the printer driver. Values selected from the printer driver always override values selected from the operator panel.)

Values:

1...999 (1*)

See also:

Collation

Duplex

Purpose:

To set duplexing as the default for all print jobs. (Select Duplex from the printer driver to duplex only specific jobs.)

Values:

Off* Prints on one side of the paper.

On Prints on both sides of the paper.

See also:

Duplex Bind

Duplex Bind

Purpose:

To define the way duplexed pages would be bound, and how the printing on the back of the sheet (even-numbered pages) is oriented in relation to the printing on the front (odd-numbered pages).

Values:

Long Edge*	Assumes binding along the long end of the page (left edge for portrait orientation and top edge for landscape orientation).
Short Edge	Assumes binding along the short edge of the page (top edge for portrait orientation and left edge for landscape orientation).

See also:

Duplex

Multipage Border

Purpose:

To print a border around each page image when using Multipage Print.

Values:

None*	Does not print a border around each page image.
Solid	Prints a solid line border around each page image.

See also:

Multipage Print

Multipage Order

Purpose:

To determine the positioning of multiple page images when using Multipage Print. The positioning depends on the number of images and whether the images are portrait or landscape in orientation.

Values:

Horizontal*

Vertical

Rev Horizontal

Rev Vertical

See also:

Multipage Print

Multipage Print

Purpose:

To print multiple page images on one side of a sheet of paper. Also called *N-Up* or *Paper Saver.*

Values:

Off*	Prints 1 page image per side.	**6 Up**	Prints 6 page images per side.
2 Up	Prints 2 page images per side.	**9 Up**	Prints 9 page images per side.
3 Up	Prints 3 page images per side.	**12 Up**	Prints 12 page images per side.
4 Up	Prints 4 page images per side.	**16 Up**	Prints 16 page images per side.

See also:

Multipage Border; **Multipage Order**; **Multipage View**

Multipage View

Purpose:

To determine the orientation of a multipage sheet.

Values:

Auto*	Lets the printer choose between portrait and landscape orientation.
Long Edge	Sets the long edge of the paper as the top of the page (landscape).
Short Edge	Sets the short edge of the paper as the top of the page (portrait).

See also:

Multipage Print

Separator Sheets

Purpose:

To insert blank separator sheets between jobs, between multiple copies of a job, or between each page of a job.

Values:

None*	Does not insert separator sheets.
Between Copies	Inserts a blank sheet between each copy of a job. If Collation is Off, a blank page is inserted between each set of printed pages (all page 1's, all page 2's, and so on). If Collation is On, a blank page is inserted between each collated copy of the job.
Between Jobs	Inserts a blank sheet between jobs.
Between Pages	Inserts a blank sheet between each page of a job. This is useful if you are printing transparencies or want to insert blank pages in a document for notes.

See also:

Separator Source; **Collation**

Separator Source

Purpose:

To specify the paper source that holds separator sheets.

Values:

Tray <x> (Tray 1*)	Selects separator sheets from the specified tray.
MP Feeder	Selects separator sheets from the multipurpose feeder. (You must also set Configure MP to Cassette.)
Env Feeder	Inserts envelopes as separator sheets.

See also:

Separator Sheets; **Configure MP**

33 Infrared Menu

Use the Infrared Menu to change printer settings affecting jobs sent to the printer through an infrared port.

Select a menu item for more details:

- **Infrared Buffer**
- **Infrared Port**
- **Job Buffering**
- **Max Baud Rate**
- **NPA Mode**
- **PCL SmartSwitch**
- **PS SmartSwitch**
- **Transmit Delay**
- **Window Size**

Note: Values marked by an asterisk are the factory default settings.

Infrared Buffer

Purpose:

To configure the size of the infrared input buffer.

Values:

Disabled	Disables the infrared buffer.
Auto*	Printer automatically calculates the Infrared Buffer size (recommended setting).
5K to maximum size allowed	User specifies the Infrared Buffer size. The maximum size setting depends on the amount of memory in your printer, the size of the other link buffers, and whether Resource Save is set to On or Off. To maximize the range for the Infrared Buffer size, disable or reduce the size of the parallel, serial, network, LocalTalk, and USB buffers.

Note: Changing the Infrared Buffer menu item automatically resets the printer.

See also:

Resource Save

Infrared Port

Purpose:

To activate the infrared port.

Values:

Disabled*	Disables the infrared port and all other menu items in the Infrared Menu.
IR Option <x>	Activates the specified infrared port.

Job Buffering

Purpose:

To temporarily store jobs on the printer hard disk before printing.

Values:

Off*	Does not buffer print jobs to the hard disk.
On	Buffers print jobs to the hard disk.
Auto	Buffers print jobs only if the printer is busy processing data from another input port.

Note: Changing the Job Buffering menu item automatically resets the printer.

Max Baud Rate

Purpose:

To specify the rate at which data can be received through the infrared port.

Values:

2400	**115200**
9600	**576000**
19200	**1152000***
38400	**4000000**
57600	

The maximum baud possible for both the printer and the infrared adapter is automatically set during a power on reset. However, if your printer is situated in a bright or highly reflective environment, you may experience intermittent communication problems. If you do, select a lower baud for the infrared connection.

NPA Mode

Purpose:

To specify whether the printer performs the special processing required for bidirectional communication, following the conventions defined in the Network Printing Alliance (NPA) Protocol.

Values:

On	Printer performs NPA processing. If data is not in NPA format, it is rejected as bad data.
Off	Printer does not perform NPA processing.
Auto*	Printer examines the data to determine the format and then processes it appropriately.

Note: Changing this menu item automatically resets the printer.

PCL SmartSwitch

Purpose:

To configure the printer so it automatically switches to PCL emulation when a print job received through the infrared port requires it, regardless of the default printer language.

Values:

On*	Printer examines the data on the infrared interface and selects PCL emulation if the data indicates that is the required printer language.
Off	Printer does not examine the incoming data. The printer uses PostScript emulation to process the job if PS SmartSwitch is On, or uses the default printer language specified in the Setup Menu if PS SmartSwitch is Off.

See also:

PS SmartSwitch; **Printer Language**

PS SmartSwitch

Purpose:

To configure the printer so it automatically switches to PostScript emulation when a print job received through the infrared port requires it, regardless of the default printer language.

Values:

On*	Printer examines data on the infrared interface and selects PostScript emulation if the data indicates that is the required printer language.
Off	Printer does not examine the incoming data. The printer uses PCL emulation to process the job if PCL SmartSwitch is On, or uses the default printer language specified in the Setup Menu if PCL SmartSwitch is Off.

See also:

PCL SmartSwitch; **Printer Language**

Transmit Delay

Purpose:

To define the amount of time, in seconds, the printer must wait before transmitting meaningful infrared data to the host computer, as well as the amount of time the printer requests that the host computer wait before transmitting infrared data.

Values:

Auto*	Printer sets the Transmit Delay value during a power-on reset to maximize link performance (recommended).
None	No delay is imposed by the printer. However, not all host computers can communicate without some transmission delays.
1...15	User selects a Transmit Delay value between 1 and 15 seconds. If you have trouble printing using the infrared port, selecting a high Transmit Delay value, such as 15, may resolve the problem.

Window Size

Purpose:

To specify the maximum number of infrared frames the printer can receive before sending an acknowledgment to the host computer.

Values:

Auto*	Printer sets the Window Size value during a power-on reset to maximize link performance (recommended).
1	User sets the Window Size to one frame (1). If you have trouble printing using the infrared port, changing the Window Size menu item to 1 may resolve the problem.

34 Job Menu

The Job Menu is only available when the printer is busy processing or printing a job, when a printer message is displayed, or when the printer is in Hex Trace mode. Press **Menu** to open the Job Menu.

Select a menu item for more details:

- **Cancel Job**
- **Confidential Job**
- **Held Jobs**
- **Print Buffer**
- **Reset Printer**

Cancel Job

Purpose:

To cancel the current print job.

Note: Cancel Job is only displayed if the printer is processing a job or has a job in printer memory.

Confidential Job

Purpose:

To print confidential jobs stored in printer memory. (When the confidential job prints, it is automatically deleted from printer memory.)

1. *Select the user name associated with your confidential job.*
2. *Enter the Personal Identification Number (PIN) associated with your Confidential Job:*

Enter PIN	Use the operator panel buttons to enter the PIN associated with your confidential job.

3. *Select a value:*

Print All Jobs	Prints all jobs associated with your user name and PIN.
Print A Job	Prints the specified confidential job. Press **Menu** to scroll through the list of confidential jobs associated with your user name and PIN. Press **Select** to print a specific job.
Delete All Jobs	Deletes all jobs associated with your user name and PIN.
Delete A Job	Deletes the specified confidential job. Press **Menu** to scroll through the list of confidential jobs associated with your user name and PIN. Press **Select** to delete a specific job.
Copies	Determines the number of copies printed for each confidential job. Press **Menu** to scroll through the list of confidential jobs associated with your user name and PIN. Press **Select** to specify the job you want to print. Press **Menu** to increase or decrease the number of copies, and then press **Select**.

See also: Confidential jobs

Held Jobs

Purpose:

To print Reserve Print, Repeat Print, or Verify Print jobs stored in printer memory.

Select the user name associated with your confidential job.

Values:

Print All Jobs	Prints all held jobs associated with your user name.
Print A Job	Prints the specified held job. Press **Menu** to scroll through the list of held jobs. Press **Select** to print the specific job.
Delete All Jobs	Deletes all held jobs associated with your user name.
Delete A Job	Deletes the designated held job. Press **Menu** to scroll through the list of held jobs. Press **Select** to delete the job.
Copies	Determines the number of copies for each held job. Press **Menu** to scroll through the list of held jobs. Press **Select** to specify the job you want to print. Press **Menu** to increase or decrease the number of copies, and then press **Select**.

Print Buffer

Purpose:

To print any data stored in the print buffer.

Note: Print Buffer is only available when you enter the Job Menu while **`Waiting`** is displayed. The Waiting state occurs if an incomplete job is sent to the printer or an ASCII job, such as a print screen command, is printing.

Reset Printer

Purpose:

To reset the printer to the user default value for each menu item, delete all downloaded resources (fonts, macros, and symbol sets) stored in printer memory (RAM), and delete all data in the interface link buffer.

Note: Before selecting Reset Printer, exit the software application you are using.

35 LocalTalk Menu

Use the LocalTalk Menu to change printer settings affecting jobs sent to the printer through a LocalTalk port.

Select a menu item for more details:

- **Job Buffering**
- **LocalTalk Addr**
- **LocalTalk Buffer**
- **LocalTalk Name**
- **LocalTalk Port**
- **LocalTalk Zone**
- **NPA Hosts**
- **NPA Mode**
- **PCL SmartSwitch**
- **PS SmartSwitch**

Note: Values marked by an asterisk are the factory default settings.

Job Buffering

Purpose:

To temporarily store jobs on the printer hard disk before printing.

Values:

Off*	Does not buffer the print job to the hard disk.
On	Buffers print jobs to the hard disk.
Auto	Buffers print jobs only if the printer is busy processing data from another input port.

Note: Changing the Job Buffering menu item automatically resets the printer.

LocalTalk Addr

Purpose:

To identify the LocalTalk Node number assigned to the printer. This menu item cannot be modified through the operator panel.

LocalTalk Buffer

Purpose:

To configure the size of the LocalTalk input buffer.

Values:

Disabled	Disables the LocalTalk port.
Auto*	Printer automatically calculates LocalTalk Buffer size (recommended).
6K to maximum size allowed	User specifies the LocalTalk Buffer size. The maximum size depends on the amount of memory in your printer, the size of the other link buffers, and whether Resource Save is set to On or Off. To maximize the range for the LocalTalk Buffer size, disable or reduce the size of the parallel, serial, network, infrared, and USB buffers.

Note: Changing the LocalTalk Buffer menu item automatically resets the printer.

See also:

Resource Save

LocalTalk Name

Purpose:

To identify the printer model name stored in printer memory. This menu item cannot be modified through the operator panel.

LocalTalk Port

Purpose:

To activate the LocalTalk port.

Values:

Disabled*	Disables the LocalTalk port and all other menu items in the LocalTalk Menu.
LTalk Option <x>	Activates the specified LocalTalk port.

LocalTalk Zone

Purpose:

To identify the LocalTalk Zone provided by the LocalTalk network. This menu item cannot be modified through the operator panel.

NPA Hosts

Purpose:

To specify the maximum number of NPA hosts that can register for NPA alerts.

Values:

1...10 (2*)

Note: Changing this menu item automatically resets the printer.

NPA Mode

Purpose:

To specify whether the printer performs the special processing required for bidirectional communication, following the conventions defined in the Network Printing Alliance (NPA) Protocol.

Values:

On	Printer performs NPA processing. If data is not in NPA format, it is rejected as bad data.
Off	Printer does not perform NPA processing.
Auto*	Printer examines the data to determine the format and then processes it appropriately.

Note: Changing this menu item automatically resets the printer.

PCL SmartSwitch

Purpose:

To configure the printer so it automatically switches to PCL emulation when a print job received through the LocalTalk port requires it, regardless of the default printer language.

Values:

On*	Printer examines data on the LocalTalk interface and selects PCL emulation if the data indicates that is the required printer language.
Off	Printer does not examine the incoming data. The printer uses PostScript emulation to process the job if PS SmartSwitch is On, or uses the default printer language specified in the Setup Menu if PS SmartSwitch is Off.

See also:

PS SmartSwitch; **Printer Language**

PS SmartSwitch

Purpose:

To configure the printer so it automatically switches to PostScript emulation when a print job received through the LocalTalk port requires it, regardless of the default printer language.

Values:

On*	Printer examines data on the LocalTalk interface and selects PostScript emulation if the data indicates that is the required printer language.
Off	Printer does not examine the incoming data. The printer uses PCL emulation to process the job if PCL SmartSwitch is On, or uses the default printer language specified in the Setup Menu if PCL SmartSwitch is Off.

See also:

PCL SmartSwitch; **Printer Language**

36 Network Menu

Use the Network Menu to change printer settings affecting jobs sent to the printer through a network port (either Standard Network or Network Opt <x>).

Select a menu item for more details:

- **Job Buffering**
- **MAC Binary PS**
- **Network Buffer**
- **Network <x> Setup**
- **NPA Mode**
- **PCL SmartSwitch**
- **PS SmartSwitch**

Note: Values marked by an asterisk are the factory default settings.

Job Buffering

Purpose:

To temporarily store jobs on the printer hard disk before printing.

Values:

Off*	Does not buffer jobs to the hard disk.
On	Buffers print jobs to the hard disk.
Auto	Buffers print jobs only if the printer is busy processing data from another input port.

Note: Changing the Job Buffering menu item automatically resets the printer.

MAC Binary PS

Purpose:

To configure the printer to process Macintosh binary PostScript print jobs.

Values:

On	Printer processes raw binary PostScript print jobs from computers using the Macintosh operating system. **Note:** This setting often causes Windows print jobs to fail.
Off	Printer filters PostScript print jobs using standard protocol.
Auto*	Printer processes print jobs from computers using either Windows or Macintosh operating systems.

Network Buffer

Purpose:

To configure the size of the network input buffer.

Values:

Auto*	Printer automatically calculates the Network Buffer size (recommended setting).
3K to maximum size allowed	User specifies the Network Buffer size. The maximum size depends on the amount of memory in your printer, the size of the other link buffers, and whether Resource Save is set to On or Off. To maximize the range for the Network Buffer size, disable or reduce the size of the parallel, serial, infrared, LocalTalk, and USB buffers.

Note: Changing the Network Buffer menu item automatically resets the printer.

See also:

Resource Save

Network <x> Setup

Purpose:

To configure an internal print server.

Values:

Values for this menu item are supplied by the specific print server. Select the menu item to see the available values.

Note: Refer to the documentation on the drivers CD for more information.

NPA Mode

Purpose:

To specify whether the printer performs the special processing required for bidirectional communication, following the conventions defined in the Network Printing Alliance (NPA) Protocol.

Values:

On	Printer performs NPA processing. If data is not in NPA format, it is rejected as bad data.
Off	Printer does not perform NPA processing.
Auto*	Printer examines the data to determine the format and then processes it appropriately.

Note: Changing this menu item automatically resets the printer.

PCL SmartSwitch

Purpose:

To configure the printer so it automatically switches to PCL emulation when a print job received through the network port requires it, regardless of the default printer language.

Values:

On*	Printer examines data on the network interface and selects PCL emulation if the data indicates that is the required printer language.
Off	Printer does not examine the incoming data. The printer uses PostScript emulation to process the job if PS SmartSwitch is On, or uses the default printer language specified in the Setup Menu if PS SmartSwitch is Off.

See also:

PS SmartSwitch; **Printer Language**

PS SmartSwitch

Purpose:

To configure the printer so it automatically switches to PostScript emulation when a print job received through the network port requires it, regardless of the default printer language.

Values:

On*	Printer examines data on the network interface connection and selects PostScript emulation if the data indicates that is the required printer language.
Off	Printer does not examine the incoming data. The printer uses PCL emulation to process the job if PCL SmartSwitch is On, or uses the default printer language specified in the Setup Menu if PCL SmartSwitch is Off.

See also:

PCL SmartSwitch; **Printer Language**

37 Paper Menu

Use the Paper Menu to define the paper loaded in each paper tray and the default paper source.

Select a menu item for more details:

- **Configure MP**
- **Custom Types**
- **Envelope Enhance**
- **Paper Loading**
- **Paper Size**
- **Paper Source**
- **Paper Texture**
- **Paper Type**
- **Paper Weight**
- **Substitute Size**
- **Universal Setup**

Note: Values marked by an asterisk are the factory default settings.

Configure MP

Purpose:

To determine when the printer selects paper loaded in the multipurpose feeder.

Values:

Cassette*	Printer treats the multipurpose feeder like any other paper tray. If a print job requests a paper size or type that is only loaded in the multipurpose feeder, the printer pulls paper from the multipurpose feeder for the job.
Manual	Printer treats the multipurpose feeder like a manual feed tray, and displays **Load `Manual`** when you need to insert a single sheet of paper in the feeder.
First	Printer pulls paper from the multipurpose feeder until it is empty, regardless of the paper source or paper size requested for the job.

Custom Types

Purpose:

To specify the kind of paper associated with each of the Custom Types available in the Paper Type menu item.

Values (for Custom Type <x>, where <x> represents 1 through 6):

Paper*	**Cotton Paper**
Card Stock	**Labels**
Transparency	**Envelope**

Note: If a user-defined name is available, it is displayed instead of Custom Type <x>. The user-defined name is truncated to 14 characters. If two or more custom types share the same name, the name only appears once in the Custom Types value list.

Envelope Enhance

Purpose:

To ensure high quality printed envelopes and minimize envelope wrinkling.

Values:

Off	Prints envelopes as any other printed material.
On*	Modifies the printing process to prevent wrinkling as envelopes move through the fuser.

If Envelope Enhance is On, you may hear a tapping sound as the envelopes print. We recommend you leave Envelope Enhance set to On unless the tapping sound is too loud for your work area. To eliminate this sound, select Off. Print a few envelopes. If the quality of print is acceptable, leave Envelope Enhance set to Off. If envelopes crease or wrinkle, select On.

Paper Loading

Purpose:

To properly handle preprinted paper loaded in a tray, whether the job is a duplexed job or a single-sided job.

Values:

1. *Select a paper type:*

Card Stock Load	**Colored Loading**	**Ltrhead Loading**	**Bond Loading**
Labels Loading	**Custom <x> Loading**	**Preprint Loading**	

2. *Select a value:*

Duplex	Notifies the printer that the specified paper type is loaded properly for duplex printing. If the printer receives a single-sided job using that paper type, the printer inserts blank pages as necessary to print the job properly on preprinted forms. This setting may slow single-sided printing.
Off*	Printer assumes preprinted material is loaded for single-sided printing. Duplexed jobs may not print properly.

Note: If a user-defined name is available, it is displayed instead of Custom <x> Loading. The name is truncated to 14 characters.

See also:

Loading print material

Paper Size

Purpose:

To identify the default paper size for each paper source. For trays with automatic size sensing, only the value detected by the hardware is displayed.

Values:

1. *Select a paper source*:

Tray <x> Size	**Env Feeder Size**	**MP Feeder Size**
Manual Pap Size	**Manual Env Size**	

2. Select a value (*denotes country-specific values):

Letter*	**A4***	**B4**	**9 Envelope**	**C5 Envelope**	**Folio**
Legal	**A5**	**JIS B5**	**10 Envelope***	**7 3/4 Envelope**	**Statement**
Executive			**DL Envelope***	**Other Envelope**	
			B5 Envelope		

Universal Select Universal when you load paper that doesn't match any of the other available sizes. You can then set the actual page size from your application software.

Paper Source

Purpose:

To identify the default paper source.

Values:

Tray <x> (Tray 1*)

MP Feeder

Env Feeder

Manual Paper

Manual Env

If you loaded the same size and type of paper in two paper sources (and the Paper Size and Paper Type menu items are correctly set), the trays are automatically linked. When one paper source is empty, paper automatically feeds from the next linked source.

Paper Texture

Purpose:

To identify the texture of the paper loaded in a specific source and to ensure that characters print clearly.

Values:

1. *Select a paper type:*

Plain Texture	**Preprint Texture**	**Labels Texture**	**Ltrhead Texture**
Card Stock Text	**Colored Texture**	**Bond Texture**	
Trnsprncy Text	**Custom <x> Texture**	**Envelope Texture**	

2. *Select a value:*

Smooth

Normal*

Rough

Note: The default for Bond Texture is Rough instead of Normal. If a user-defined name is available for a custom Type, then the name is displayed instead of Custom <x> Texture. The name is truncated to 14 characters.

Use Paper Texture in connection with the Paper Type and Paper Weight menu items. You may need to change those menu items to optimize print quality for your specific paper.

See also:

Paper Type; **Paper Weight**

Paper Type

Purpose:

To identify the type of paper installed in each paper source.

Values:

1. *Select a paper source:*

Tray <x> Type	**Env Feeder Type**	**MP Feeder Type**
Manual Pap Type	**Manual Env Type**	

2. *Select a value:*

Plain Paper	**Labels**	**Preprinted**	**Envelope**
Card Stock	**Bond**	**Colored Paper**	**Preprinted**
Transparency	**Letterhead**	**Custom Type <x>**	**Colored Paper**

The Paper Type default for each envelope source is Envelope. The Paper Type default for each paper tray is as follows*:*

Tray 1–Plain Paper	**Tray 4–**Custom Type 4
Tray 2–Custom Type 2	**Tray 5–**Custom Type 5
Tray 3–Custom Type 3	**Manual Pap Type–**Plain Paper

Note: If a user-defined name is available, it is displayed instead of Custom Type <x>. The user-defined name is truncated to 14 characters. If two or more custom types share the same name, the name only appears once in the Paper Type value list.

Use this menu item to:

- Optimize print quality for the specified paper.
- Select paper sources through your software application by selecting type and size.
- Automatically link paper sources. Any sources containing the same type and size of paper are automatically linked by the printer, if you have set the Paper Size and the Paper Type to the correct values.

See also:

Custom Types

Paper Weight

Purpose:

To identify the relative weight of the paper loaded in a specific source and ensure that the toner adheres properly to the printed page.

Values:

1. *Select a paper type:*

Plain Weight	**Preprint Weight**	**Bond Weight**	**Labels Weight**
Cardstock Weight	**Color Weight**	**Envelope Weight**	**Ltrhead Weight**
Trnsprncy Weight	**Custom <x> Weight**		

2. *Select a value:*

Light

Normal*

Heavy

Note: If a user-defined name is available, it is displayed instead of Custom <x> Weight. The name is truncated to 14 characters.

Substitute Size

Purpose:

To have the printer substitute the specified paper size if the requested size is not loaded.

Values:

Off	Printer prompts the user to load the requested paper size.
Letter/A4	Prints A4 size jobs on letter size paper if only letter size paper is loaded, and prints letter size jobs on A4 size paper if only A4 size paper is loaded.
Statement/A5	Prints A5 size jobs on statement size paper if only statement size paper is loaded, and prints statement size jobs on A5 paper if only A5 paper is loaded.
All Listed*	Substitutes Letter/A4.

Universal Setup

Purpose:

To determine the default size when the Paper Size setting for a tray or feeder is Universal.

Values:

First select a unit of measure (* denotes a country-specific factory default value):

Inches*

Millimeters*

Then select the values:

Portrait Width	3.00–14.17 in.	76–360 mm
	(8.50 in.*)	(216 mm*)
Portrait Height	3.00–14.17 in.	76–360 mm
	(14.17 in.*)	(360 mm*)
Feed Direction	Short Edge*	
	Long Edge	

See also:

Print material specifications

38 PCL Emul Menu

Use the PCL Emul Menu to change printer settings that only affect jobs using the PCL emulation printer language.

Select a menu item for more details:

- **A4 Width**
- **Auto CR after LF**
- **Auto LF after CR**
- **Font Name**
- **Font Source**
- **Lines per Page**
- **Orientation**
- **Pitch**
- **Point Size**
- **Symbol Set**
- **Tray Renumber**

Note: Values marked by an asterisk are the factory default settings.

A4 Width

Purpose:

To select the width of the logical page for A4 size paper.

Values:

198 mm*	Makes the logical page compatible with the Hewlett-Packard LaserJet 5 Printer.
203 mm	Makes the logical page wide enough to print eighty 10-pitch characters.

Auto CR after LF

Purpose:

To specify whether the printer automatically performs a carriage return after a line feed control command.

Values:

Off*	Printer does not perform a carriage return after a line feed control command.
On	Printer performs a carriage return after a line feed control command.

Auto LF after CR

Purpose:

To specify whether the printer automatically performs a line feed after a carriage return control command.

Values:

Off*	Printer does not perform a line feed after a carriage return control command.
On	Printer performs a line feed after a carriage return control command.

Font Name

Purpose:

To choose a specific font from the specified font source.

Values:

R0 Courier 10*

The font name and font ID for all fonts in the selected font source are displayed. The font source abbreviation is R for resident, F for flash, K for disk, and D for download.

See also:

Font Source

Font Source

Purpose:

To determine the set of fonts displayed in the Font Name menu item.

Values:

Resident*	Displays all fonts resident in printer RAM when the printer ships from the factory.
Download	Displays all fonts downloaded to printer RAM.
Flash	Displays all fonts stored in flash memory.
Disk	Displays all fonts stored on the printer's hard disk.
All	Displays all fonts available to the printer from all sources.

See also:

Font Name

Lines per Page

Purpose:

To determine the number of lines that print on each page.

Values:

1...255

60* (country-specific)

64* (country-specific)

The printer sets the amount of space between each line (vertical line spacing) based on the Lines per Page, Paper Size, and Orientation menu items. Select the correct Paper Size and Orientation before changing Lines per Page.

See also:

Orientation; **Paper Size**

Orientation

Purpose:

To determine how text and graphics are oriented on the page.

Values:

Portrait*	Prints text and graphics parallel to the short edge of the paper.
Landscape	Prints text and graphics parallel to the long edge of the paper.

Pitch

Purpose:

To specify the font pitch for scalable monospaced fonts.

Values:

0.08...100 (in increments of 0.01 cpi)

10*

Pitch refers to the number of fixed-space characters in a horizontal inch of type. You can select a pitch from 0.08 to 100 characters per inch (cpi) in increments of 0.01 cpi. For nonscalable monospaced fonts, the pitch is displayed, but cannot be changed.

Note: Pitch is only displayed for fixed, or monospaced, fonts.

Point Size

Purpose:

To change the point size for scalable typographic fonts.

Values:

1...1008 (in increments of 0.25 points)

12*

Point size refers to the height of the characters in the font. One point equals approximately 1/72 of an inch. You can select point sizes from 1 to 1008 in increments of 0.25 points.

Note: Point Size is only displayed for typographic fonts.

Symbol Set

Purpose:

To choose a symbol set for a specified font name.

Values:

10U PC-8* (country-specific)

12U PC-850* (country-specific)

A symbol set is a set of alphabetic and numeric characters, punctuation, and special symbols used when printing with a selected font. Symbol sets support the different requirements for languages or specific applications, such as math symbols for scientific text. Only the symbol sets supported for the selected font name are displayed.

See also:

Font Name

Tray Renumber

Purpose:

To configure your printer to work with printer drivers or applications that use different source assignments for the paper trays.

First select a paper source:

Assign Tray <x>	**Assign Env Feeder**	**Assign Man Env**
Assign MP Feeder	**Assign Man Paper**	

Then select a value:

Off*	Printer uses factory default paper source assignments.
0...199	Select a numeric value to assign a custom value to a paper source.
None	Paper source ignores the Select Paper Feed command.

Other Tray Renumber selections:

View Factory Def	Press **Menu** to display the factory default value assigned to each paper source.
Restore Defaults	Select Yes to return all tray assignments to factory default values.

Note: Refer to the *Technical Reference* for more information about assigning source numbers.

39 Parallel Menu

Use the Parallel Menu to change printer settings affecting jobs sent to the printer through a parallel port (either Std Parallel or Parallel Opt <x>).

Select a menu item for more details:

- **Advanced Status**
- **Honor Init**
- **Job Buffering**
- **NPA Mode**
- **Parallel Buffer**
- **Parallel Mode 1**
- **Parallel Mode 2**
- **PCL SmartSwitch**
- **PS SmartSwitch**
- **Protocol**

Note: Values marked by an asterisk are the factory default settings.

Advanced Status

Purpose:

To enable bidirectional communication through the parallel port.

Values:

Off	Disables parallel port negotiation.
On*	Enables bidirectional communication through the parallel interface.

Honor Init

Purpose:

To determine whether the printer honors hardware initialization requests from the computer. The computer requests initialization by activating the INIT signal on the parallel interface. Many personal computers activate the INIT signal each time the computer is turned on and off.

Values:

Off*	Printer does not honor hardware initialization requests from the computer.
On	Printer honors hardware initialization requests from the computer.

Job Buffering

Purpose:

To temporarily store jobs on the printer hard disk before printing.

Values:

Off*	Does not buffer print jobs to the hard disk.
On	Buffers print jobs to the hard disk.
Auto	Buffers print jobs only if the printer is busy processing data from another input port.

Note: Changing the Job Buffering menu item automatically resets the printer.

NPA Mode

Purpose:

To specify whether the printer performs the special processing required for bidirectional communication, following the conventions defined in the Network Printing Alliance (NPA) Protocol.

Values:

On	Printer performs NPA processing. If data is not in NPA format, it is rejected as bad data.
Off	Printer does not perform NPA processing.
Auto*	Printer examines data and determines the format and then processes it appropriately.

Note: Changing this menu item automatically resets the printer.

Parallel Buffer

Purpose:

To configure the size of the parallel input buffer.

Values:

Disabled	Disables the parallel port.
Auto*	Printer automatically calculates the Parallel Buffer size (recommended setting).
3K to maximum size allowed	User specifies the Parallel Buffer size. The maximum size depends on the amount of memory in your printer, the size of the other link buffers, and whether Resource Save is set to On or Off. To maximize the range for the Parallel Buffer size, disable or reduce the size of the serial, infrared, LocalTalk, and USB buffers.

Note: Changing the Parallel Buffer menu item automatically resets the printer.

See also:

Resource Save

Parallel Mode 1

Purpose:

To control the pull-up resistors on the parallel port signals. This menu item is useful for personal computers that have open collector outputs on the parallel port signals.

Values:

On	Disables the resistors.
Off*	Enables the resistors.

Parallel Mode 2

Purpose:

To determine whether the parallel port data is sampled on the leading or trailing edge of strobe.

Values:

On*	Samples parallel port data on the leading edge of strobe.
Off	Samples parallel port data on the trailing edge of strobe.

PCL SmartSwitch

Purpose:

To configure the printer so it automatically switches to PCL emulation when a print job received through the parallel port requires it, regardless of the default printer language.

Values:

On*	Printer examines data on the parallel interface and selects PCL emulation if the data indicates that is the required printer language.
Off	Printer does not examine the incoming data. The printer uses PostScript emulation to process the job if PS SmartSwitch is On, or uses the default printer language specified in the Setup Menu if PS SmartSwitch is Off.

See also:

Printer Language; **PS SmartSwitch**

PS SmartSwitch

Purpose:

To configure the printer so it automatically switches to PostScript emulation when a print job received through the parallel port requires it, regardless of the default printer language.

Values:

On*	Printer examines data on the parallel interface and selects PostScript emulation if the data indicates that is the required printer language.
Off	Printer does not examine the incoming data. The printer uses PCL emulation to process the job if PCL SmartSwitch is On, or uses the default printer language specified in the Setup Menu if PCL SmartSwitch is Off.

See also:

PCL SmartSwitch; **Printer Language**

Protocol

Purpose:

To specify the parallel interface protocol.

Values:

Standard	May resolve some parallel interface problems.
Fastbytes*	Provides compatibility with most existing parallel interface implementations (recommended setting).

See also:

Technical Reference

40 PostScript Menu

Use the PostScript Menu to change printer settings that only affect jobs using the PostScript emulation printer language.

Select a menu item for more details:

- **Font Priority**
- **Print PS Error**

Note: Values marked by an asterisk are the factory default settings.

Font Priority

Purpose:

To establish the font search order.

Values:

Resident*	Printer searches printer memory for the requested font before searching flash memory or hard disk.
Flash/Disk	Printer searches the hard disk and flash memory for the requested font before searching printer memory.

Note: Font Priority is only displayed when a formatted flash or hard disk is installed and is neither defective nor Read/Write or Write protected.

Print PS Error

Purpose:

To print a page defining the PostScript emulation error when an error occurs.

Values:

Off*	Discards the print job without printing an error message.
On	Prints an error message before it discards the job.

41 Quality Menu

Use the Quality Menu to change printer settings affecting the quality of printed characters and images.

Select a menu item for more details:

- **PictureGrade™**
- **PQET**
- **Print Resolution**
- **Toner Darkness**

Note: Values marked by an asterisk are the factory default settings.

PictureGrade

Purpose:

To improve the quality of grayscale printing at 300 and 600 dots per inch (dpi) in PostScript emulation.

Values:

On*	Uses modified screening parameters to improve print quality of graphics.
Off	Uses standard screening parameters.

PQET

Purpose:

To improve the quality of text and make characters appear smoother when Print Resolution is set to 300 dots per inch (dpi).

Values:

Off	Does not alter quality of text characters printed at 300 dpi.
On*	Smooths characters with jagged or uneven edges.

Print Resolution

Purpose:

To define the number of dots printed per inch (dpi). The higher the value, the sharper the clarity of printed characters and graphics.

Values:

300 dpi	Offers a lower resolution printing option when memory is at a premium.
600 dpi*	Produces high quality output for print jobs that are mostly text.
1200 Image Q	Uses line screening for print jobs that contain bitmapped images, such as scanned photos.
1200 dpi	Produces highest quality output for jobs where print speed is not important and memory is abundant.

Toner Darkness

Purpose:

To lighten or darken text images, or conserve toner.

Values:

1	**6**
2	**7**
3	**8***
4	**9**
5	**10**

Select a lower value for finer line width, higher definition in graphics, and lighter grayscale images. Select a higher value for bolder line widths or darker grayscale images. Select 10 for very bold text. Select a value less than 8 to conserve toner.

A vertical bar (|) indicates the factory default value. An arrow symbol (V) indicates a user default value.

42 Serial Menu

Use the Serial Menu to change printer settings affecting jobs sent to the printer through a serial port (Serial Opt <x>).

Select a menu item for more details:

- **Baud**
- **Data Bits**
- **Honor DSR**
- **Job Buffering**
- **NPA Mode**
- **Parity**
- **PCL SmartSwitch**
- **PS SmartSwitch**
- **Robust XON**
- **RS-232/RS-422**
- **RS-422 Polarity**
- **Serial Buffer**
- **Serial Protocol**

Note: Values marked with an asterisk (*) are the factory default settings.

Baud

Purpose:

To specify the rate at which data can be received through the serial port.

Values:

1200	**57600**
2400	**115200**
4800	**138200**
9600*	**172800**
19200	**230400**
38400	**345600**

See also:

Technical Reference

Data Bits

Purpose:

To specify the number of data bits that are sent in each transmission frame.

Values:

7

8*

See also:

Technical Reference

Honor DSR

Purpose:

To determine whether the printer uses the Data Set Ready (DSR) signal. DSR is one of the handshaking signals for most serial interface cables.

Values:

Off*	All data received by the serial port is treated as valid data.
On	Only data received while the DSR signal is high is treated as valid.

The serial interface uses DSR to distinguish data sent by the computer from data created by electrical noise in the serial cable. This electrical noise can cause stray characters to print. Select On to prevent stray characters from printing.

Job Buffering

Purpose:

To temporarily store jobs on the printer hard disk before printing.

Values:

Off*	Does not buffer print jobs to the hard disk.
On	Buffers print jobs to the hard disk.
Auto	Buffers print jobs only if the printer is busy processing data from another input port.

Note: Changing the Job Buffering menu item automatically resets the printer.

NPA Mode

Purpose:

To specify whether the printer performs the special processing required for bidirectional communication, following the conventions defined in the Network Printing Alliance (NPA) Protocol.

Values:

On	Printer performs NPA processing. If data is not in NPA format, it is rejected as bad data.
Off	Printer does not perform NPA processing.
Auto*	Printer examines the data to determine the format and then processes it appropriately.

Note: Changing this menu item automatically resets the printer.

Parity

Purpose:

To select the parity for serial input and output data frames.

Values:

Even

Odd

None*

Ignore

See also:

Technical Reference

PCL SmartSwitch

Purpose:

To configure the printer so it automatically switches to PCL emulation when a print job received through the serial port requires it, regardless of the default printer language.

Values:

On* Printer examines data on the serial interface and selects PCL emulation if the data indicates that is the required printer language.

Off Printer does not examine the incoming data. The printer uses PostScript emulation to process the job if PS SmartSwitch is On, or uses the default printer language specified in the Setup Menu if PS SmartSwitch is Off.

See also:

PS SmartSwitch; **Printer Language**

PS SmartSwitch

Purpose:

To configure the printer so it automatically switches to PostScript emulation when a print job received through the serial port requires it, regardless of the default printer language.

Values:

On* Printer examines data on the serial interface and selects PostScript emulation if the data indicates that is the required printer language.

Off Printer does not examine the incoming data. The printer uses PCL emulation to process the job if PCL SmartSwitch is On, or uses the default printer language specified in the Setup Menu if PCL SmartSwitch is Off.

See also:

PCL SmartSwitch; **Printer Language**

Robust XON

Purpose:

To determine whether the printer communicates availability to the computer.

Values:

Off*	Printer waits to receive data from the computer.
On	Printer sends a continuous stream of XONs to the host computer to indicate that the serial port is ready to receive more data.

This menu item only applies to the serial port if Serial Protocol is set to XON/XOFF.

RS-232/RS-422

Purpose:

To specify the type of serial communication.

Values:

RS-232*

RS-422

Note: Selecting RS-422 automatically sets Serial Protocol to XON/XOFF.

RS-422 Polarity

Purpose:

To establish the behavior of the positive and negative signals when using RS-422 serial communication.

Values:

Normal*	Uses default definition of one and zero.
Reverse	Reverses the definition of one and zero, thereby allowing a positive connection to a host's negative terminal without changing the physical cable.

Serial Buffer

Purpose:

To configure the size of the serial input buffer.

Values:

Disabled	Disables the serial port.
Auto*	Printer automatically calculates the Serial Buffer size (recommended setting).
3K to maximum size allowed	User specifies the Serial Buffer size. The maximum size depends on the amount of memory in your printer, the size of the other link buffers, and whether Resource Save is set to On or Off. To maximize the range for the Serial Buffer size, disable or reduce the size of the parallel, infrared, LocalTalk, and USB buffers.

Note: Changing the Serial Buffer menu item automatically resets the printer.

See also:

Resource Save

Serial Protocol

Purpose:

To select the hardware and software handshaking values for the serial interface.

Values:

DTR*	Hardware handshaking.
DTR/DSR	Hardware handshaking.
XON/XOFF	Software handshaking.
XON/XOFF/DTR	Combined hardware and software handshaking.
XONXOFF/DTRDSR	Combined hardware and software handshaking.

See also:

Technical Reference

43 Setup Menu

Use the Setup Menu to configure a variety of printer features.

Select a menu item for more details:

- **Alarm Control**
- **Auto Continue**
- **Display Language**
- **Download Target**
- **Jam Recovery**
- **Job Accounting**
- **Page Protect**
- **Power Saver**
- **Print Timeout**
- **Printer Language**
- **Resource Save**
- **Toner Alarm**
- **Wait Timeout**

Note: Values marked by an asterisk are the factory default settings.

Alarm Control

Purpose:

To establish whether the printer sounds an alarm when the printer requires operator intervention.

Values:

Off	Printer does not sound an alarm.
Single*	Printer sounds three quick beeps.
Continuous	Printer repeats three beeps every 10 seconds.

Auto Continue

Purpose:

To define the amount of time (in seconds) the printer waits after displaying an operator intervention error message before it resumes printing.

Values:

Disabled*	Printer does not resume printing until someone clears the error message.
5...255	Printer waits the specified amount of time, and then automatically resumes printing. This timeout value also applies if the menus are displayed (and the printer is offline) for the specified period of time.

Display Language

Purpose:

To determine the language of the text on the display.

Values:

English	**Norsk**	**Russian**
Français	**Nederlands**	**Polski**
Deutsch	**Svenska**	**Hungarian**
Italiano	**Português**	**Turkish**
Español	**Suomi**	**Czech**
Dansk	**Japanese**	

Note: All values may not be available.

Download Target

Purpose:

To specify the storage location for downloaded resources.

Values:

RAM*	All downloaded resources are automatically stored in printer memory (RAM).
Flash	All downloaded resources are automatically stored in flash memory.
Disk	All downloaded resources are automatically stored on the hard disk.

Storing downloaded resources in flash memory or on a hard disk is permanent storage rather than the temporary storage that RAM provides. The resources remain in the flash memory or on the hard disk even when the printer is turned off. Use MarkVision to download resources to the printer.

Jam Recovery

Purpose:

To establish whether the printer reprints jammed pages.

Values:

On	Printer reprints jammed pages.
Off	Printer does not reprint jammed pages.
Auto*	Printer reprints a jammed page unless the memory required to hold the page is needed for other printer tasks.

Job Accounting

Purpose:

To store statistical information about your most recent print jobs on the hard disk. The statistics include whether the job printed with or without errors, the print time, the job size (in bytes), the requested paper size and paper type, the total number of printed pages, and the number of copies requested.

Values:

Off*	Printer does not store job statistics on disk.
On	Printer stores job statistics for the most recent print jobs.

Note: Job Accounting is only displayed when a hard disk is installed and is neither defective nor Read/Write or Write protected.

See also:

Job Acct Stat

Page Protect

Purpose:

To successfully print a page that may otherwise generate **`Complex Page`** errors.

Values:

Off*	Prints a partial page of data if memory is insufficient to process the entire page.
On	Ensures that an entire page is processed before it prints.

If, after selecting On, you still cannot print the page, you may also have to reduce the size and number of fonts on the page, or increase the installed printer memory.

For most print jobs, you do not need to select On. When On is selected, printing may be slower.

Power Saver

Purpose:

To specify the amount of time (in minutes) the printer waits after a job is printed before it goes into a reduced power state.

Values:

1...240 (60*)	Specifies the amount of time after a print job before the printer goes into Power Saver mode.

`Power Saver` replaces the **`Ready`** message. When the printer is in Power Saver mode, it is still ready to receive print jobs.

Select 1 to put the printer in Power Saver mode one minute after it finishes a print job. This uses much less energy, but requires more warm-up time for the printer. Select 1 if your printer shares an electrical circuit with room lighting and you notice lights flickering.

Select a high value if your printer is in constant use. Under most circumstances, this keeps the printer ready to print with minimum warm-up time. Select a value between 1 and 240 minutes if you want a balance between energy consumption and a shorter warm-up period.

Print Timeout

Purpose:

To specify the amount of time (in seconds) the printer waits before printing the last page of a print job that does not end with a command to print the page. The print timeout counter does not start until **`Waiting`** is displayed.

Values:

Disabled	The printer does not print the last page of a print job until one of the following occurs: • The printer receives enough information to fill the page. • The printer receives a Form Feed command. • You select Print Buffer from the Job Menu.
1...225 (90*)	The printer prints the last page after the specified time.

See also:

Print Buffer

Printer Language

Purpose:

To establish the default printer language used to communicate data from the computer to the printer.

Values:

PCL Emulation*	PCL emulation, compatible with Hewlett-Packard printers.
PS Emulation	PostScript emulation, compatible with Adobe PostScript language.

Note: Setting a printer language as the default does not prevent a software application from sending print jobs that use the other language.

Resource Save

Purpose:

To determine what the printer does with downloaded resources, such as fonts and macros stored in RAM, if the printer receives a job that requires more memory than is available.

Values:

Off*	Printer retains downloaded resources only until memory is needed. It then deletes those resources associated with the inactive printer language.
On	Printer retains all downloaded resources for all printer languages during language changes and printer resets. If the printer runs out of memory, **`38 Memory Full`** is displayed.

Toner Alarm

Purpose:

To specify how the printer responds when it is out of toner.

Values:

Off*	An error message is displayed until someone replaces the toner cartridge. If an Auto Continue value is selected from the Setup Menu, the printer resumes printing after the specified timeout value.
Single	Printer stops printing, displays an error message, and sounds three quick beeps.
Continuous	Printer stops printing, displays an error message, and repeats three beeps every 10 seconds until the toner cartridge is replaced.

See also:

Auto Continue

Wait Timeout

Purpose:

To specify the amount of time (in seconds) the printer waits to receive additional bytes of data from the computer. When this timeout expires, the print job is canceled.

Values:

Disabled	Disables Wait Timeout.
15...65535 (40*)	Specifies the amount of time the printer waits for additional data before it cancels the job.

Note: Wait Timeout is only available when you use PostScript emulation. This menu item has no effect on PCL emulation print jobs.

44 Utilities Menu

Use the Utilities Menu to print a variety of listings relating to available printer resources, printer settings, and print jobs. Other menu items let you set up printer hardware and troubleshoot printer problems.

Select a menu item for more details:

- **Defragment Flash**
- **Factory Defaults**
- **Format Disk**
- **Format Flash**
- **Hex Trace**
- **Job Acct Stat**
- **Print Directory**
- **Print Fonts**
- **Print Menus**
- **Print Net <x> Setup**

Defragment Flash

Purpose:

To retrieve storage area lost when resources are deleted from flash memory.

Values:

Yes	Printer transfers all resources stored in flash memory to printer memory and then reformats the flash memory option. When the format operation is complete, the resources are loaded back into flash memory.
No	Printer cancels the request to defragment the flash memory.

WARNING: Do not turn off the printer while the flash is defragmenting.

Factory Defaults

Purpose:

To return your printer settings to the factory default values.

Values:

Restore

- All menu items are returned to the factory default values except:
  - Display Language.
  - All settings in the Parallel Menu, Serial Menu, Network Menu, Infrared Menu, LocalTalk Menu, and USB Menu.
- All downloaded resources (fonts, macros, and symbol sets) in printer memory (RAM) are deleted. (Resources residing in flash memory or on the hard disk are unaffected.)

Do Not Restore User-defined settings remain.

Format Disk

Purpose:

To format the printer's hard disk.

Values:

Yes Deletes any data stored on the hard disk and prepares the device to receive new resources.

No Cancels the request to format the hard disk and leaves current resources stored on the disk.

WARNING: Do not turn off the printer while the hard disk is formatting.

Format Flash

Purpose:

To format the flash memory.

Values:

Yes Deletes any data stored in flash memory and prepares the flash memory to receive new resources.

No Cancels the request to format the flash memory and leaves current resources stored in flash memory.

WARNING: Do not turn off the printer while the flash is formatting.

Hex Trace

Purpose:

To help isolate the source of a print job problem. With Hex Trace selected, all data sent to the printer is printed in hexadecimal and character representation. Control codes are not executed.

To exit Hex Trace, turn the printer off or reset the printer from the Job Menu.

Job Acct Stat

Purpose:

To print a listing of all job statistics stored on the hard disk, or to clear all statistics on the disk.

Values:

Print	Prints all statistics available for the most recent print jobs.
Clear	Deletes all accumulated job statistics from the hard disk.

See also:

Job Accounting

Print Directory

Purpose:

To print a list of all the resources stored in flash memory or on the hard disk.

Note: Print Directory is available only when a nondefective flash or disk is installed and formatted.

See also:

Technical Reference

Print Fonts

Purpose:

To print a sample of all the fonts available for the selected printer language.

Values:

PCL Fonts	Prints a sample of all printer fonts available for PCL emulation.
PS Fonts	Prints a sample of all printer fonts available for PostScript emulation.

Print Menus

Purpose:

To print a listing of the current user default values, the installed options, the amount of installed printer memory, and the status of printer supplies.

Print Net <x> Setup

Purpose:

To print information relating to the internal print server and the network settings defined by the Network <x> Setup menu item in the Network Menu.

See also:

Network <x> Setup

45 USB Menu

Use the USB Menu to change printer settings affecting a Universal Serial Bus (USB) port (USB Option <x>).

Select a menu item for more details:

- **Job Buffering**
- **MAC Binary PS**
- **NPA Mode**
- **PCL SmartSwitch**
- **PS SmartSwitch**
- **USB Buffer**

Note: Values marked by an asterisk are the factory default settings.

Job Buffering

Purpose:

To temporarily store jobs on the printer hard disk before printing.

Values:

Off*	Does not buffer print jobs to the hard disk.
On	Buffers print jobs to the hard disk.
Auto	Buffers print jobs only if the printer is busy processing data from another input port.

Note: Changing the Job Buffering menu item automatically resets the printer.

MAC Binary PS

Purpose:

To configure the printer to process Macintosh binary PostScript print jobs.

Values:

On	Printer processes raw binary PostScript print jobs from computers using the Macintosh operating system. **Note:** This setting often causes Windows print jobs to fail.
Off	Printer filters PostScript print jobs using standard protocol.
Auto*	Printer accepts print jobs from computers using either Windows or Macintosh operating systems.

NPA Mode

Purpose:

To specify whether the printer performs the special processing required for bidirectional communication, following the conventions defined in the Network Printing Alliance (NPA) Protocol.

Values:

On	Printer performs NPA processing. If data is not in NPA format, it is rejected as bad data.
Off	Printer does not perform NPA processing.
Auto*	Printer examines the data to determine the format and then processes it appropriately.

Note: Changing this menu item automatically resets the printer.

PCL SmartSwitch

Purpose:

To configure the printer so it automatically switches to PCL emulation when a print job received through the USB port requires it, regardless of the default printer language.

Values:

On*	Printer examines the data on the USB interface and selects PCL emulation if the data indicates that is the required printer language.
Off	Printer does not examine the incoming data. The printer uses PostScript emulation to process the job if PS SmartSwitch is On, or uses the default printer language specified in the Setup Menu if PS SmartSwitch is Off.

See also:

PS SmartSwitch; **Printer Language**

PS SmartSwitch

Purpose:

To configure the printer so it automatically switches to PostScript emulation when a print job received through the USB port requires it, regardless of the default printer language.

Values:

On*	Printer examines data on the USB interface and selects PostScript emulation if the data indicates that is the required printer language.
Off	Printer does not examine the incoming data. The printer uses PCL emulation to process the job if PCL SmartSwitch is On, or uses the default printer language specified in the Setup Menu if PCL SmartSwitch is Off.

See also:

PCL SmartSwitch; **Printer Language**

USB Buffer

Purpose:

To configure the size of the USB input buffer.

Values:

Disabled	Disables the USB port.
Auto*	Printer automatically calculates the USB Buffer size (recommended setting).
3K to maximum size allowed	User specifies the USB Buffer size. The maximum size depends on the amount of memory in your printer, the size of the other link buffers, and whether Resource Save is set to On or Off. To maximize the range for the USB Buffer size, disable or reduce the size of the parallel, serial, network, infrared, and LocalTalk buffers.

Note: Changing the USB Buffer menu item automatically resets the printer.

See also:

Resource Save

46 Disabling operator panel menus

To disable the operator panel menus so that changes cannot be made to the printer default settings:

1. Turn the printer off.

   Note: Disabling the operator panel menus does not prevent access to the Job Menu or to Print and Hold functionality.

2. Press and hold **Select** and **Return** and turn the printer on.
3. Release the buttons when you see **`Performing Self Test`**.

   Config Menu appears on the first line of the display.

4. Press **Menu** until you see **`Panel Menus`**, and then press **Select**.

   Disable appears on the second line of the display.

5. Press **Select**.

   `Locking Menus` appears briefly.

6. Press **Menu** until you see Exit Config Menus, and then press **Select**.

The menus are disabled. If you press **Menu**, the message **`Menus Disabled`** appears.

To enable the menus:

1. Repeat steps 1 through 4.
2. Press **Menu** until you see Enable.
3. Continue with steps 5 and 6.

47 Removing options

Keep the following guidelines in mind when removing any options:

- Remove all print material from any option before removing it from the printer.
- To remove any input option, you must first remove the printer and any options installed above it.
- Remove paper options individually; never attempt to remove two or more paper options at once.
- Make sure the printer power is off and the power cord and any cables are unplugged *before* removing any options.

For more information, click a topic:

- **Removing the envelope feeder**
- **Removing a paper tray or duplex unit**
- **Removing printer or flash memory**
- **Removing an option card**

48 Removing the envelope feeder

1 Remove envelopes from the envelope feeder.

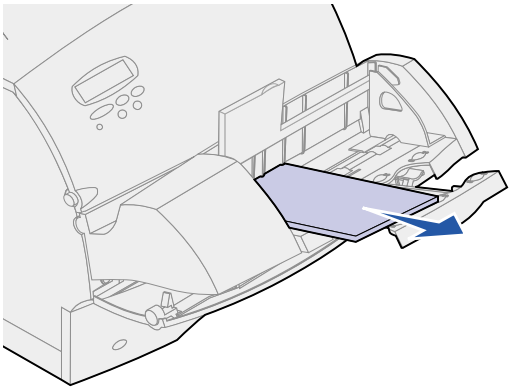

2 Push the envelope support to the closed position.

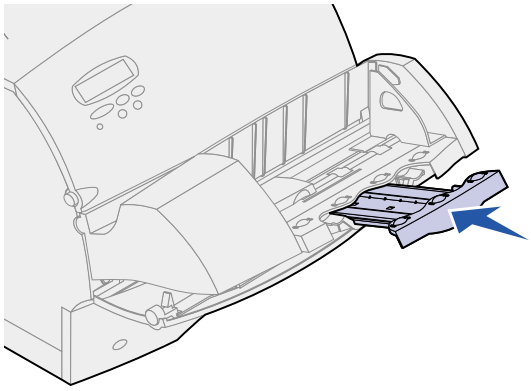

3 Open the printer upper front door.

4 Pull the envelope feeder up slightly and straight out of the printer. Set it aside.

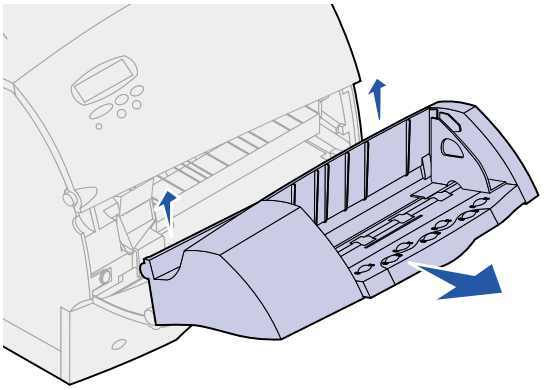

5 Close both front doors.

6 Refer to the *Setup Guide* when you are ready to reattach options.

49 Removing a paper tray or duplex unit

1 Ask someone to help you lift the printer by the handholds and set it aside.

CAUTION: Make sure your fingers are not under the printer when you set it down.

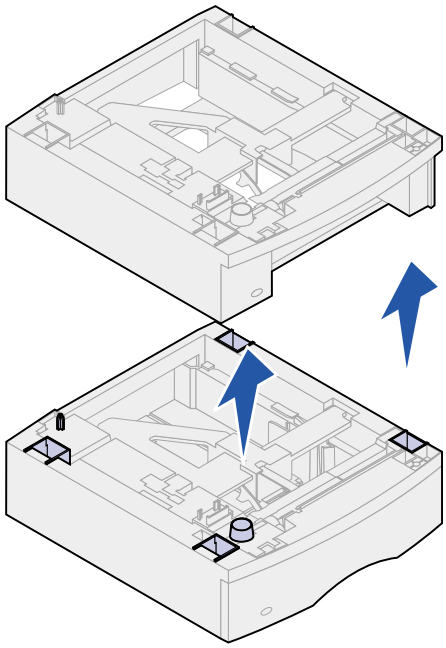

2 Carefully lift the option straight up until it is completely disconnected from the option below it. Set it aside.

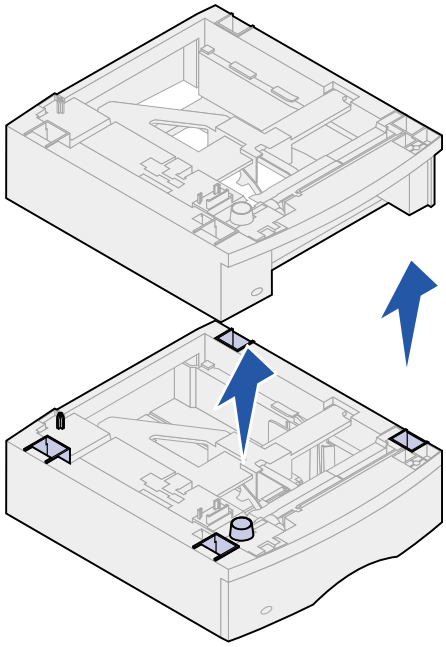

3 Refer to the *Setup Guide* when you are ready to reattach options.

50 Removing printer or flash memory

If necessary, refer to the *Setup Guide* for instructions on accessing the printer system board.

1 Locate the memory option you want to remove.

WARNING: Electronic components are easily damaged by static electricity. Touch something metal on the printer before you touch the memory option.

2 Push out on the latches at each end of the connector.

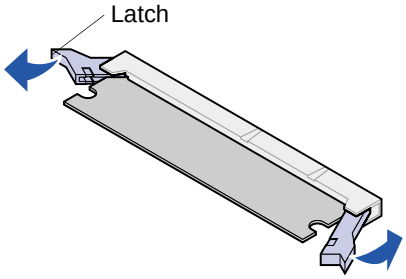

3 Pull the memory option out of the connector.

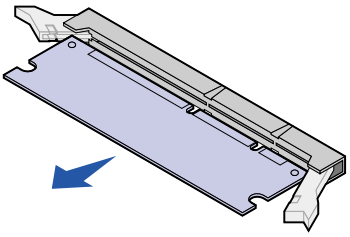

4 Place the memory option in its original packaging. If you did not save the packaging, wrap it in paper and store it in a box.

5 If you need to install a replacement memory option or other option on the system board, refer to the *Setup Guide*.

6 Refer to the *Setup Guide* for instructions on closing the printer system board cover.

51 Removing an option card

If necessary, refer to the *Setup Guide* for instructions on accessing the printer system board.

WARNING: Electronic components are easily damaged by static electricity. Touch something metal on the printer before you touch the card.

1. Locate the option you want to remove.
2. Loosen and remove the two screws over and under the slot. Gently pull the card out of the connector on the system board.

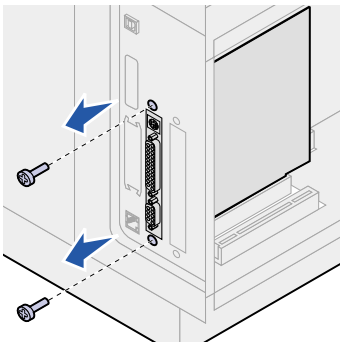

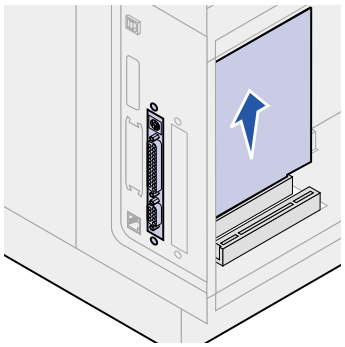

3. Place the option card in its original packaging. If you did not save the packaging, wrap the card in paper and store it in a box.
4. If you need to install another option on the system board, refer to the *Setup Guide*.
5. Refer to the *Setup Guide* for instructions on closing the printer system board cover.

52 Understanding fonts

Typefaces and fonts

A *font* is a set of characters and symbols created with a distinct design. The distinct design is called a *typeface.* The typefaces you select add personality to a document. Well-chosen typefaces make a document easier to read.

The printer has numerous resident fonts in PCL 6 and PostScript 3 emulations. See **Resident fonts** for a listing of all resident fonts.

Weight and style

Typefaces are often available in different weights and styles. These variations modify the original typeface so you can, for example, emphasize important words in text or highlight book titles. The different weights and styles are designed to complement the original typeface.

Weight refers to the thickness of the lines that form the characters. Thicker lines result in darker characters. Some words commonly used to describe the weight of a typeface are bold, medium, light, black, and heavy.

Style refers to other typeface modifications, such as tilt or character width. Italic and oblique are styles where the characters are tilted. Narrow, condensed, and extended are three common styles that modify the character widths.

Some fonts combine several weight and style modifications; for example, Helvetica Narrow Bold Italic. A group of several weight and style variations of a single typeface is called a *typeface family*. Most typeface families have four variations: regular, italic, bold, and bold italic. Some families have more variations, as the following illustration for the Helvetica typeface family shows:

Helvetica	ABCDEFGHIJKLMNOPQRSTUVWXYZ
Helvetica-Italic	*ABCDEFGHIJKLMNOPQRSTUVWXYZ*
Helvetica-Bold	**ABCDEFGHIJKLMNOPQRSTUVWXYZ**
Helvetica-BoldItalic	***ABCDEFGHIJKLMNOPQRSTUVWXYZ***
Helvetica-Narrow	ABCDEFGHIJKLMNOPQRSTUVWXYZ
Helvetica-Narrow Italic	*ABCDEFGHIJKLMNOPQRSTUVWXYZ*
Helvetica-Narrow Bold	**ABCDEFGHIJKLMNOPQRSTUVWXYZ**
Helvetica-Narrow-BoldItalic	***ABCDEFGHIJKLMNOPQRSTUVWXYZ***

Pitch and point size

The size of a font is specified as either a pitch or point size, depending on whether the font is fixed space or proportional.

In *fixed space* fonts, each character has the same width. *Pitch* is used to specify the size of fixed space fonts. It is a measure of the number of characters that will print in one horizontal inch of type. For example, all 10-pitch fonts print 10 characters per inch (cpi) and all 12-pitch fonts print 12 cpi:

```
Courier       10 Pitch  1234567890
Courier-Bold  10 Pitch  1234567890

Courier       12 Pitch  123456789012
Courier-Bold  12 Pitch  123456789012
```

1 inch

In *proportional* (or *typographic*) fonts, every character can have a different width. Since proportional fonts have characters with different widths, the font size is specified in point size, not pitch. *Point size* refers to the height of the characters in the font. A *point* is defined as 1/72 inch. The characters in a font printed at 24 point will be twice as large as the characters in the same font printed at 12 point.

The following illustration shows samples of a font printed in different point sizes:

48 point 36 point

24 point 18 point 12 point 10 point

The point size of a font is defined as the distance from the top of the tallest character in the font to the bottom of the lowest character in the font. Due to the definition of point size, different fonts printed at the same point size may appear quite different in size. This is because there are other font parameters that affect how the font looks. However, the point size of a font is an excellent specification of the relative size of a font. The following examples illustrate two very different proportional fonts at 14 point:

ITC Avant Garde
abcdefghABCDEFGH
ITC Zapf Chancery
abcdefghABCDEFGH

Bitmapped and scalable fonts

The printer uses both bitmapped and scalable fonts.

Bitmapped fonts are stored in printer memory as predefined patterns of bits that represent a typeface at a specific size, style, and resolution. The following illustration shows an example of a character from a bitmapped font.

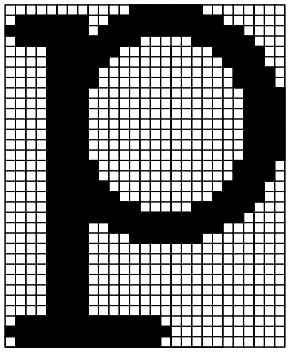

Bitmapped fonts are available in different type styles and point sizes as downloadable fonts. Contact the place where you bought your printer for more information about downloadable fonts.

Scalable fonts (also called *outline* fonts) are stored as computer programs that define the outlines of the characters in the font. Each time you print characters from a scalable font, the printer creates a bitmap of the characters at the point size you choose and saves it temporarily in printer memory.

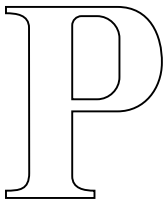

These temporary bitmapped fonts are deleted when you turn off or reset the printer. Scalable fonts provide the flexibility of printing in many different point sizes.

Your printer uses different scalable font formats for downloading fonts to the printer. PCL 6 emulation uses *Intellifont* and *TrueType* scalable fonts. PostScript 3 emulation uses *Type 1* and *TrueType* scalable fonts. There are thousands of different scalable fonts available in these different font formats from numerous font suppliers.

If you plan to use many downloadable bitmapped or scalable fonts or if you plan to use many different sizes of scalable fonts, you may need to purchase additional memory for your printer.

Resident fonts

Your printer is equipped with resident fonts stored permanently in printer memory. Different fonts are available in PCL 6 and PostScript 3 emulations. Some of the most popular typefaces, like Courier and Times New Roman, are available for all printer languages.

The following table lists all the fonts resident in your printer. See **Printing a font sample list** for instructions on how to print samples of the fonts.You can select the resident fonts from your software application, or from the operator panel if you are using PCL 6 emulation.

Resident scalable fonts	
PCL 6 emulation	**PostScript 3 emulation**
Albertus Medium	AlbertusMT
	AlbertusMT-Italic
	AlbertusMT-Light
Albertus Extra Bold	
Antique Olive	AntiqueOlive-Roman
Antique Olive Italic	AntiqueOlive-Italic
Antique Olive Bold	AntiqueOlive-Bold
	AntiqueOlive-Compact
Arial	ArialMT
Arial Italic	Arial-ItalicMT
Arial Bold	Arial-BoldMT
Arial Bold Italic	Arial-BoldItalicMT
ITC Avant Garde Book	AvantGarde-Book
ITC Avant Garde Book Oblique	AvantGarde-BookOblique
ITC Avant Garde Demi	AvantGarde-Demi
ITC Avant Garde Demi Oblique	AvantGarde-DemiOblique
ITC Bookman Light	Bookman-Light
ITC Bookman Light Italic	Bookman-LightItalic
ITC Bookman Demi	Bookman-Demi
ITC Bookman Demi Italic	Bookman-DemiItalic
Clarendon Condensed Bold	
Coronet	Coronet-Regular
CourierPS	Courier
CourierPS Oblique	Courier-Oblique
CourierPS Bold	Courier-Bold
CourierPS Bold Italic	Courier-BoldOblique
CG Omega	
CG Omega Bold	

Resident scalable fonts (continued)	
PCL 6 emulation	**PostScript 3 emulation**
CG Omega Italic	
CG Omega Bold Italic	
Garamond Antiqua	Garamond-Antiqua
Garamond Halbfett	Garamond-Halbfett
Garamond Kursiv	Garamond-Kursiv
Garamond Kursiv Halbfett	Garamond-KursivHalbfett
Helvetica Light	Helvetica-Light
Helvetica Light Oblique	Helvetica-LightOblique
Helvetica Black	Helvetica-Black
Helvetica Black Oblique	Helvetica-BlackOblique
Helvetica	Helvetica
Helvetica Italic	Helvetica-Oblique
Helvetica Bold	Helvetica-Bold
Helvetica Bold Italic	Helvetica-BoldOblique
Helvetica Narrow	Helvetica-Narrow
Helvetica Narrow Italic	Helvetica-Narrow-Oblique
Helvetica Narrow Bold	Helvetica-Narrow-Bold
Helvetica Narrow Bold Italic	Helvetica-Narrow-BoldOblique
CG Times	Intl-CG-Times
CG Times Italic	Intl-CG-Times-Italic
CG Times Bold	Intl-CG-Times-Bold
CG Times Bold Italic	Intl-CG-Times-BoldItalic
Univers Medium	Intl-Univers-Medium
Univers Medium Italic	Intl-Univers-MediumItalic
Univers Bold	Intl-Univers-Bold
Univers Bold Italic	Intl-Univers-BoldItalic
Courier	Intl-Courier
Courier Italic	Intl-Courier-Oblique
Courier Bold	Intl-Courier-Bold
Courier Bold Italic	Intl-Courier-BoldOblique
Letter Gothic	LetterGothic
Letter Gothic Italic	LetterGothic-Slanted
Letter Gothic Bold	LetterGothic-Bold
	LetterGothic-BoldSlanted
Marigold	Marigold
Century Schoolbook Roman	NewCenturySchlbk-Roman

Resident scalable fonts (continued)	
PCL 6 emulation	**PostScript 3 emulation**
Century Schoolbook Italic	NewCenturySchlbk-Italic
Century Schoolbook Bold	NewCenturySchlbk-Bold
Century Schoolbook Bold Italic	NewCenturySchlbk-BoldItalic
	Optima
	Optima-Bold
	Optima-BoldItalic
	Optima-Italic
Palatino Roman	Palatino-Roman
Palatino Italic	Palatino-Italic
Palatino Bold	Palatino-Bold
Palatino Bold Italic	Palatino-BoldItalic
SymbolPS	Symbol
Symbol	
Times Roman	Times-Roman
Times Italic	Times-Italic
Times Bold	Times-Bold
Times Bold Italic	Times-BoldItalic
Times New Roman	TimesNewRomanPSMT
Times New Roman Italic	TimesNewRomanPS-ItalicMT
Times New Roman Bold	TimesNewRomanPS-BoldMT
Times New Roman Bold Italic	TimesNewRomanPS-BoldItalicMT
	Univers
	Univers-Oblique
	Univers-Bold
	Univers-BoldOblique
Univers Condensed Medium	Univers-Condensed
Univers Condensed Medium Italic	Univers-CondensedOblique
Univers Condensed Bold	Univers-CondensedBold
Univers Condensed Bold Italic	Univers-CondensedBoldOblique
Wingdings	Wingdings-Regular
ITC Zapf Chancery Medium Italic	ZapfChancery-MediumItalic
ITC Zapf Dingbats	ZapfDingbats
	Univers-Extended
	Univers-ExtendedObl
	Univers-BoldExt
	Univers-BoldExtObl

Resident scalable fonts (continued)	
PCL 6 emulation	**PostScript 3 emulation**
	Univers-Light
	Univers-LightOblique
	Clarendon
	Clarendon-Light
	Clarendon-Bold
	Helvetica-Condensed
	Helvetica-Condensed-Bold
	Helvetica-Condensed-BoldObl
	Helvetica-Condensed-Oblique
	StempelGaramond-Bold
	StempelGaramond-BoldItalic
	StempelGaramond-Italic
	StempelGaramond-Roman
	Apple-Chancery
	Chicago
	Geneva
	Monaco
	NewYork
	Oxford
	Taffy
	MonaLisa-Recut
	Candid
	Bodoni
	Bodoni-Italic
	Bodoni-Bold
	Bodoni-BoldItalic
	Bodoni-Poster
	Bodoni-PosterCompressed
	CooperBlack
	CooperBlack-Italic
	Copperplate-ThirtyTwoBC
	Copperplate-ThirtyThreeBC
	Eurostile
	Eurostile-Bold
	Eurostile-ExtendedTwo
	Eurostile-BoldExtendedTwo

Resident scalable fonts (continued)	
PCL 6 emulation	**PostScript 3 emulation**
	GillSans
	GillSans-Italic
	GillSans-Bold
	GillSans-BoldItalic
	GillSans-Condensed
	GillSans-BoldCondensed
	GillSans-Light
	GillSans-LightItalic
	GillSans-ExtraBold
	Goudy
	Goudy-Italic
	Goudy-Bold
	Goudy-BoldItalic
	Goudy-ExtraBold
	HoeflerText-Regular
	HoeflerText-Italic
	HoeflerText-Black
	HoeflerText-BlackItalic
	HoeflerText-Ornaments
	JoannaMT
	JoannaMT-Italic
	JoannaMT-Bold
	JoannaMT-BoldItalic
	LubalinGraph-Book
	LubalinGraph-BookOblique
	LubalinGraph-Demi
	LubalinGraph-DemiOblique
Line Printer 16	
POSTNET Barcode	

Symbol sets

A *symbol set* is the collection of alphabetic and numeric characters, punctuation, and special characters available in the font you select. Symbol sets support the requirements for different languages or specific applications, such as math symbols used for scientific text.

In PCL 6 emulation, a symbol set also defines which character will print for each key on the keyboard (or more specifically, for each *code point*). Some applications require different characters at some code points. To support multiple applications and languages, your printer has 83 symbol sets for the resident PCL 6 emulation fonts.

Symbol sets for PCL 6 emulation

Not all font names support all of the symbol sets listed. Refer to the *Technical Reference* to determine which symbols sets are supported by each font name.

ABICOMP Brazil/Portugal	ISO 21: German	PC-853 Latin 3 (Turkish)
ABICOMP International	ISO 25: French	PC-855 Cyrillic
DeskTop	ISO 57: Chinese	PC-857 Latin 5 (Turkish)
Legal	ISO 60: Norwegian version 1	PC-858 Multilingual Euro
MC Text	ISO 61: Norwegian version 2	PC-860 Portugal
Microsoft Publishing	ISO 69: French	PC-861 Iceland
Russian-GOST	ISO 84: Portuguese	PC-863 Canadian French
Ukrainian	ISO 85: Spanish	PC-865 Nordic
PCL ITC Zapf Dingbats	ISO 8859-1 Latin 1 (ECMA-94)	PC-866 Cyrillic
PS ITC Zapf Dingbats	ISO 8859-2 Latin 2	PC-869 Greece
PS Math	ISO 8859-5 Latin/Cyrillic	PC-911 Katakana
PS Text	ISO 8859-7 Latin/Greek	PC-1004 OS/2
Pi Font	ISO 8859-9 Latin 5	Math-8
Symbol	ISO 8859-10 Latin 6	Greek-8
Wingdings	ISO 8859-15 Latin 9	Turkish-8
POSTNET Barcode	PC-8 Bulgarian	Roman-8
ISO : German	PC-8 Danish/Norwegian (437N)	Roman-9
ISO : Spanish	PC-8 Greek Alternate (437G)	Roman Extension
ISO 2: IRV (Int'l Ref Version)	PC-8 Turkish (437T)	Ventura ITC Zapf Dingbats
ISO 4: United Kingdom	PC-8 Latin/Greek	Ventura International
ISO 6: ASCII	PC-8 PC Nova	Ventura Math
ISO 10: Swedish	PC-8 Polish Mazovia	Ventura US
ISO 11: Swedish for Names	PC-8 Code Page 437	Windows 3.0 Latin 1
ISO 14: JIS ASCII	PC-775 Baltic (PC-8 Latin 6)	Windows 98 Cyrillic
ISO 15: Italian	PC-850 Multilingual	Windows 98 Greek

ISO 16: Portuguese	PC-851 Greece	Windows 98 Latin 1
ISO 17: Spanish	PC-852 Latin 2	Windows 98 Latin 2
		Windows 98 Latin 5
		Windows 98 Latin 6 (Baltic)

Downloadable fonts

You can download scalable fonts in PostScript 3 emulation and either scalable or bitmapped fonts in PCL 6 emulation. Fonts can be downloaded to printer memory or to a flash memory option or hard disk option. Fonts downloaded to flash memory or hard disk remain in memory even after the printer language changes, the printer resets, or the printer is turned off.

MarkVision includes a remote management function that lets you manipulate the font files you have downloaded to flash memory or hard disk. See the drivers CD for more information about MarkVision.

Printing a font sample list

To print samples of all the fonts currently available for your printer:

1. Make sure the printer power is on and the **Ready** status message is displayed.
2. Press **Menu** to enter the menus.
3. Continue to press and release **Menu** until you see Utilities Menu, and then press **Select**.
4. Press **Menu** until Print Fonts displays, and then press **Select**.
5. Press **Menu** until either PCL Fonts or PS Fonts appears on the second line of the display.
   - Select PCL Fonts to print a listing of the fonts available to the PCL emulator.
   - Select PS Fonts to print a listing of the fonts available to the PostScript 3 emulator. This choice only displays when the PostScript printer language is available in the printer.
6. Press **Select**.

   The message **`Printing Font List`** appears and remains on the operator panel until the page prints. The printer returns to the Ready state after the font sample list prints.

53 Printer specifications

Dimensions

Dimension	Lexmark T522
Height with 500-sheet drawer	379 mm (14.9 in.) 513 mm (20.2 in.)
Width	418 mm (16.5 in.)
Depth	513 mm (20.2 in.)
Weight (with print cartridge) with 500-sheet drawer	20.4 kg (45 lb) 23.6 kg (52 lb)

Duty cycle

Up to 75,000 pages per month.

54 Notices

- Edition notice
- Trademarks
- Licensing notice
- Safety information
- Cautions and warnings
- Electronic emission notices
- Energy Star
- Laser notices

Edition notice

May 2001

The following paragraph does not apply to any country where such provisions are inconsistent with local law: LEXMARK INTERNATIONAL, INC., PROVIDES THIS PUBLICATION “AS IS” WITHOUT WARRANTY OF ANY KIND, EITHER EXPRESS OR IMPLIED, INCLUDING, BUT NOT LIMITED TO, THE IMPLIED WARRANTIES OF MERCHANTABILITY OR FITNESS FOR A PARTICULAR PURPOSE. Some states do not allow disclaimer of express or implied warranties in certain transactions; therefore, this statement may not apply to you.

This publication could include technical inaccuracies or typographical errors. Changes are periodically made to the information herein; these changes will be incorporated in later editions. Improvements or changes in the products or the programs described may be made at any time.

Comments about this publication may be addressed to Lexmark International, Inc., Department F95/032-2, 740 West New Circle Road, Lexington, Kentucky 40550, U.S.A. In the United Kingdom and Eire, send to Lexmark International Ltd., Marketing and Services Department, Westhorpe House, Westhorpe, Marlow Bucks SL7 3RQ. Lexmark may use or distribute any of the information you supply in any way it believes appropriate without incurring any obligation to you. You can purchase additional copies of publications related to this product by calling 1-800-553-9727. In the United Kingdom and Eire, call 0628-481500. In other countries, contact your point of purchase.

References in this publication to products, programs, or services do not imply that the manufacturer intends to make these available in all countries in which it operates. Any reference to a product, program, or service is not intended to state or imply that only that product, program, or service may be used. Any functionally equivalent product, program, or service that does not infringe any existing intellectual property right may be used instead. Evaluation and verification of operation in conjunction with other products, programs, or services, except those expressly designated by the manufacturer, are the user’s responsibility.

© Copyright 2001 Lexmark International, Inc.
All rights reserved.

UNITED STATES GOVERNMENT RESTRICTED RIGHTS
This software and documentation are provided with RESTRICTED RIGHTS. Use, duplication or disclosure by the Government is subject to restrictions as set forth in subparagraph (c)(1)(ii) of the Rights in Technical Data and Computer Software clause at DFARS 252.227-7013 and in applicable FAR provisions: Lexmark International, Inc., Lexington, KY 40550.

Trademarks

Lexmark and Lexmark with diamond design, MarkNet, and MarkVision are trademarks of Lexmark International, Inc., registered in the United States and/or other countries. PictureGrade is a trademark of Lexmark International, Inc.

Operation ReSouce is a service mark of Lexmark International, Inc.

PCL® is a registered trademark of the Hewlett-Packard Company. PCL is Hewlett-Packard Company’s designation of a set of printer commands (language) and functions included in its printer products. This printer is intended to be compatible with the PCL language. This means the printer recognizes PCL commands used in various application programs, and that the printer emulates the functions corresponding to the commands.

PostScript® is a registered trademark of Adobe Systems Incorporated. PostScript 3 is Adobe Systems' designation of a set of printer commands (language) and functions included in its software products. This printer is intended to be compatible with the PostScript 3 language. This means the printer recognizes PostScript 3 commands used in various application programs, and that the printer emulates the functions corresponding to the commands.

Details relating to compatibility are included in the *Technical Reference*.

The following terms are trademarks or registered trademarks of these companies:

Helvetica	Linotype-Hell AG and/or its subsidiaries
ITC Avant Garde	International Typeface Corporation
Times New Roman	The Monotype Corporation plc
Zapf Chancery	International Typeface Corporation

Other trademarks are the property of their respective owners.

Licensing notice

The printer resident software contains:

- Software developed and copyrighted by Lexmark
- Lexmark modified software licensed under the provisions of the GNU General Public License version 2 and the GNU Lesser General Public License version 2.1
- Software licensed under the BSD license and warranty statements

Click the title of the document you want to review:

BSD License and Warranty statements

GNU General Public License

The Lexmark modified GNU licensed software is free software; you can redistribute it and/or modify it under the terms of the licenses referenced above. These licenses do not provide you any rights to the Lexmark copyrighted software in this printer.

Since the GNU licensed software that the Lexmark modifications are based upon is supplied explicitly without warranty, use of the Lexmark modified version is similarly provided without warranty. See the warranty disclaimers in the referenced licenses for additional details.

To obtain source code files for the Lexmark modified GNU licensed software, launch the drivers CD that shipped with your printer and click Contact Lexmark.

Safety information

- If your product is NOT marked with this symbol ⧈, it MUST be connected to an electrical outlet that is properly grounded.
- The power cord must be connected to an electrical outlet that is near the product and easily accessible.
- Refer service or repairs, other than those described in the operating instructions, to a professional service person.
- This product is designed, tested and approved to meet strict global safety standards with the use of specific Lexmark components. The safety features of some parts may not always be obvious. Lexmark is not responsible for the use of other replacement parts.
- Your product uses a laser, exercise

  CAUTION: Use of controls or adjustments or performance of procedures other than those specified herein may result in hazardous radiation exposure.

- Your product uses a printing process that heats the print media, and the heat may cause the media to release emissions. You must understand the section in your operating instructions that discusses the guidelines for selecting print media to avoid the possibility of harmful emissions.

Cautions and warnings

CAUTION: A caution identifies something that might cause you harm.

WARNING: A warning identifies something that might damage your printer hardware or software.

Electronic emission notices

With a network cable attached

Federal Communications Commission (FCC) Compliance Information Statement

The Lexmark T522 has been tested and found to comply with the limits for a Class A digital device, pursuant to Part 15 of the FCC Rules. Operation is subject to the following two conditions: (1) this device may not cause harmful interference, and (2) this device must accept any interference received, including interference that may cause undesired operation.

The FCC Class A limits are designed to provide reasonable protection against harmful interference when the equipment is operated in a commercial environment. This equipment generates, uses, and can radiate radio frequency energy and, if not installed and used in accordance with the instruction manual, may cause harmful interference to radio communications. Operation of this equipment in a residential area is likely to cause harmful interference, in which case the user will be required to correct the interference at his own expense.

The manufacturer is not responsible for any radio or television interference caused by using other than recommended cables or by unauthorized changes or modifications to this equipment. Unauthorized changes or modifications could void the user's authority to operate this equipment.

Note: To assure compliance with FCC regulations on electromagnetic interference for a Class A computing device, use a properly shielded and grounded cable such as Lexmark part number 1329605. Use of a substitute cable not properly shielded and grounded may result in a violation of FCC regulations.

Industry Canada Compliance Statement

This Class A digital apparatus meets all requirements of the Canadian Interference-Causing Equipment Regulations.

Avis de conformité aux normes d'Industrie Canada

Cet appareil numérique de la classe A respecte toutes les exigences du Règlement sur le matériel brouilleur du Canada.

European Community (EC) Directives Conformity

This product is in conformity with the protection requirements of EC Council directives 89/336/EEC and 73/23/EEC on the approximation and harmonization of the laws of the Member States relating to electromagnetic compatibility and safety of electrical equipment designed for use within certain voltage limits.

A declaration of conformity with the requirements of the Directive has been signed by the Director of Manufacturing and Technical Support, Lexmark International, S.A., Boigny, France.

This product satisfies the Class A limits of EN 55022 and safety requirements of EN 60950.

WARNING: When a network cable is attached, this is a Class A product. In a domestic environment, this product may cause radio interference, in which case, the user may be required to take adequate measures.

Without a network cable attached

Federal Communications Commission (FCC) Compliance Information Statement

The Lexmark T522 has been tested and found to comply with the limits for a Class B digital device, pursuant to Part 15 of the FCC Rules. Operation is subject to the following two conditions: (1) this device may not cause harmful interference, and (2) this device must accept any interference received, including interference that may cause undesired operation.

The FCC Class B limits are designed to provide reasonable protection against harmful interference in a residential installation. This equipment generates, uses and can radiate radio frequency energy and, if not installed and used in accordance with the instructions, may cause harmful interference to radio communications. However, there is no guarantee that interference will not occur in a particular installation. If this equipment does cause harmful interference to radio or television reception, which can be determined by turning the equipment off and on, the user is encouraged to try to correct the interference by one or more of the following measures:

- Reorient or relocate the receiving antenna.
- Increase the separation between the equipment and receiver.

- Connect the equipment into an outlet on a circuit different from that to which the receiver is connected.
- Consult your point of purchase or service representative for additional suggestions.

The manufacturer is not responsible for any radio or television interference caused by using other than recommended cables or by unauthorized changes or modifications to this equipment. Unauthorized changes or modifications could void the user's authority to operate this equipment.

Note: To assure compliance with FCC regulations on electromagnetic interference for a Class B computing device, use a properly shielded and grounded cable such as Lexmark part number 1329605. Use of a substitute cable not properly shielded and grounded may result in a violation of FCC regulations.

Industry Canada Compliance Statement

This Class B digital apparatus meets all requirements of the Canadian Interference-Causing Equipment Regulations.

Avis de conformité aux normes d'Industrie Canada

Cet appareil numérique de la classe B respecte toutes les exigences du Règlement sur le matériel brouilleur du Canada.

European Community (EC) Directives conformity

This product is in conformity with the protection requirements of EC Council directives 89/336/EEC and 73/23/EEC on the approximation and harmonization of the laws of the Member States relating to electromagnetic compatibility and safety of electrical equipment designed for use within certain voltage limits.

A declaration of conformity with the requirements of the Directive has been signed by the Director of Manufacturing and Technical Support, Lexmark International, S.A., Boigny, France.

This product satisfies the Class B limits of EN 55022 and safety requirements of EN 60950.

The United Kingdom Telecommunications Act 1984

This apparatus is approved under the approval number NS/G/1234/J/100003 for the indirect connections to the public telecommunications systems in the United Kingdom.

Energy Star

The EPA ENERGY STAR Computers program is a partnership effort with computer manufacturers to promote the introduction of energy-efficient products and to reduce air pollution caused by power generation.

Companies participating in this program introduce personal computers, printers, monitors, or fax machines that power down when they are not being used. This feature will cut the energy used by up to 50 percent. Lexmark is proud to be a participant in this program.

As an Energy Star Partner, Lexmark International, Inc. has determined that this product meets the Energy Star guidelines for energy efficiency.

Laser notices

Laser advisory label

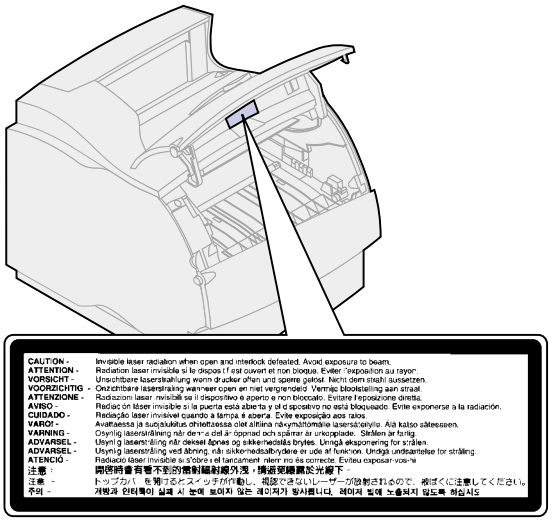

Laser notice

The printer is certified in the U.S. to conform to the requirements of DHHS 21 CFR Subchapter J for Class I (1) laser products, and elsewhere is certified as a Class I laser product conforming to the requirements of IEC 825.

Class I laser products are not considered to be hazardous. The printer contains internally a Class IIIb (3b) laser that is nominally a 5 milliwatt gallium arsenide laser operating in the wavelength region of 770-795 nanometers. The laser system and printer are designed so there is never any human access to laser radiation above a Class I level during normal operation, user maintenance, or prescribed service condition.

Index

A

A4 Width (PCL Emul Menu) 149
Advanced Status (Parallel Menu) 154
Alarm Control (Setup Menu) 168
alarm, toner 172
alarms, setting 168
Auto Continue (Setup Menu) 169
Auto CR after LF (PCL Emul Menu) 150
Auto LF after CR (PCL Emul Menu) 150
avoiding paper jams 47

B

Baud (Serial Menu) 162
bitmapped fonts 191
Blank Pages (Finishing Menu) 119
buffer, infrared 125
buffer, LocalTalk 134
buffer, network 138
buffer, parallel 156
buffer, serial 167
buffer, USB 180

C

Cancel Job (Job Menu) 130
card stock, choosing 23
charge roll, replacing 49
clearing paper jams 57
Collation (Finishing Menu) 120
collation, enabling 120
complex page errors 170
Confidential Job (Job Menu) 131
Configure MP (Paper Menu) 141
Copies (Finishing Menu) 120
copies, specifying number 120
Custom Types (Paper Menu) 142

D

Data Bits (Serial Menu) 163
Defragment Flash (Utilities Menu) 174
disk (hard disk) 175
Display Language (Setup Menu) 169
Download Target (Setup Menu) 169
downloaded resources, directory 176
downloaded resources, saving 172
downloaded resources, storage location 169
Duplex (Finishing Menu) 120
Duplex Bind (Finishing Menu) 121
duplex, enabling 120

E

Envelope Enhance (Paper Menu) 142
envelopes 40
- guidelines 22
- loading feeder 40
- loading the multipurpose feeder 32
- settings 43

F

Factory Defaults (Utilities Menu) 175
factory defaults, restoring 175
Finishing Menu 119
- Blank Pages 119
- Collation 120
- Copies 120
- Duplex 120
- Duplex Bind 121
- Multipage Border 121
- Multipage Order 122
- Multipage Print 122
- Multipage View 123
- Separator Sheets 123
- Separator Source 124

flash memory, defragmenting 174
flash memory, directory 176
flash memory, formatting 175
flash memory, storage location 169
folio size 17
Font Name (PCL Emul Menu) 150
Font Priority (PostScript Menu) 159
Font Source (PCL Emul Menu) 151
fonts 189
- bitmapped 191
- choosing in PCL emulation 150
- description 189
- pitch and point size 189
- printing sample list 198
- priority 159
- resident 192
- scalable 191
- symbol sets (PCL 6 emulation) 197
- symbol sets supported 153
- weight and style 189

Format Disk (Utilities Menu) 175
Format Flash (Utilities Menu) 175
fuser, replacing 51

H

hard disk, directory 176
hard disk, formatting 175
hard disk, storage location 169
held jobs 12
Held Jobs (Job Menu) 131
Hex Trace (Utilities Menu) 176
hole-punched paper 20
Honor DSR (Serial Menu) 163
Honor Init (Parallel Menu) 155

I

indicator lights 8
Infrared Buffer (Infrared Menu) 125
Infrared Menu 125
- Infrared Buffer 125
- Infrared Port 126
- Job Buffering 126
- Max Baud Rate 126
- NPA Mode 127
- PCL SmartSwitch 127
- PS SmartSwitch 128
- Transmit Delay 128
- Window Size 129

infrared port 125
activating 126
buffer size 125
maximum baud rate 126
NPA Mode 127
PCL SmartSwitch 127
PS SmartSwitch 128
transmit delay 128
window size 129
Infrared Port (Infrared Menu) 126
integrated forms 28
Intellifont fonts 191
interfaces, infrared 125
interfaces, LocalTalk 133
interfaces, network 137
interfaces, parallel 154
interfaces, serial 162
interfaces, USB 178

J

Jam Recovery (Setup Menu) 170
jams 57
avoiding 47
clearing 57
Job Accounting (Setup Menu) 170
Job Acct Stat (Utilities Menu) 176
Job Buffering (Infrared Menu) 126
Job Buffering (LocalTalk Menu) 133
Job Buffering (Network Menu) 137
Job Buffering (Parallel Menu) 155
Job Buffering (Serial Menu) 163
Job Buffering (USB Menu) 178
Job Menu 130
Cancel Job 130
Confidential Job 131
Held Jobs 131
Print Buffer 132
Reset Printer 132
job statistics 170
jobs, canceling 130
jobs, confidential 131

L

labels 22
guidelines 22
printer maintenance 23
laser notices 206
letterhead 20
Lines per Page (PCL Emul Menu) 151
linking trays 46
loading envelopes 40
LocalTalk Addr (LocalTalk Menu) 134
LocalTalk Buffer (LocalTalk Menu) 134
LocalTalk Menu 133
Job Buffering 133
LocalTalk Addr 134
LocalTalk Buffer 134
LocalTalk Name 134
LocalTalk Port 134
LocalTalk Zone 135
NPA Hosts 135
NPA Mode 135
PCL SmartSwitch 136
PS SmartSwitch 136
LocalTalk Name (LocalTalk Menu) 134
LocalTalk port 133
activating 134
buffer size 134
NPA hosts 135
NPA mode 135
PCL SmartSwitch 136
PS SmartSwitch 136
LocalTalk Port (LocalTalk Menu) 134
LocalTalk Zone (LocalTalk Menu) 135

M

MAC Binary PS (Network Menu) 138
MAC Binary PS (USB Menu) 179
maintenance
replacing charge roll 49
replacing fuser 51
replacing print cartridge 48
replacing transfer roll 50
resetting maintenance counter 52
Max Baud Rate (Infrared Menu) 126
media guidelines 18
card stock 23
envelopes 22
labels 22
recommended paper 19
storing paper 45
unacceptable paper 20
memory, Print and Hold function 12
menu map 116
menus 116
complete list 116
display language 169
Messages 84
2<xx> Paper Jam 105
31 Defective Print Cartridge 105
32 Unsupported Print Cartridge 106
34 Short Paper 106
35 Res Save Off Deficient Memory 107
37 Insufficient Collation Area 107
37 Insufficient Defrag Memory 107
37 Insufficient Memory 108
38 Memory Full 108
39 Complex Page 109
51 Defective Flash 109
52 Flash Full 109
53 Unformatted Flash 110
54 Network <x> Software Error 110
54 Par <x> ENA Connection Lost 111
54 Parallel Error 111
54 Parallel Option <x> Error 111
54 Serial Option <x> Error 110
54 Standard Serial Error 110
54 Std Network Software Error 110
54 Std Par ENA Connection Lost 111
56 Parallel Port <x> Disabled 111
56 Serial Port <x> Disabled 112
56 Standard Serial Disabled 112
56 Std Parallel Port Disabled 111
58 Too Many Disks Installed 112
58 Too Many Flash Options 112
58 Too Many Trays Attached 113
59 Incompatible <device> 113
61 Defective Disk 113
62 Disk Full 113
63 Unformatted Disk 114
70–79 messages 114
80 Scheduled Maintenance 114
81 Engine Code CRC Failure 115
88 Toner Low 115
900–999 Service 115
Activating Menu Changes 87
Busy 87
Cancelling Job 87
Check <device> Connection 88
Clearing Job Accounting Stat 88
Close Door or Insert Cartridge 88
Defragmenting 89
Delete All Jobs 89

Deleting Jobs 89
Disabling Menus 90
Disk Corrupted 90
Disk Recovery 91
Enabling Menus 91
Enter PIN 14
Flushing Buffer 92
Formatting Disk 92
Formatting Flash 92
Held Jobs may be lost 93
Infrared 93
Insert Tray <x> 93
Install <device> or Cancel Job 94
Invalid Network <x> Code 94
Invalid Standard Network Code 94
Load Manual 95
Load Tray <x> 95
LocalTalk <x> 95
Menus Disabled 96
Network <x> 96
Network <x>,<y> 96
Network Card Busy 96
No Jobs Found. Retry? 97
Not Ready 97
Parallel <x> 97
Performing Self Test 97
Power Saver 98
Print Jobs on Disk 98
Printing Directory List 98
Printing Font List 99
Printing Job Accounting Stat 99
Printing Menu Settings 99
Prog Engine Code 99
Prog System Code 100
Program Flash 100
Programming Disk 100
Queuing and Deleting Jobs 100
Queuing Jobs 101
Ready 101
Ready Hex 101
Reattach <device> 102
Res Reduced 102
Resetting Maint Cnt Value 103
Resetting the Printer 102
Restoring Factory Defaults 103
Serial <x> 103
Std Bin Full 103
Toner Low 104
Tray <x> Empty 104
Tray <x> Low 104
Tray <x> Missing 104
USB <x> 105
Waiting 105
Multipage Border (Finishing Menu) 121
Multipage Order (Finishing Menu) 122
multipage print 122
borders 121
configuring 122
page order 122
page orientation 123
Multipage Print (Finishing Menu) 122
Multipage View (Finishing Menu) 123
multipurpose feeder 32
choosing print materials 32
closing 39
configuring 141
loading envelopes 34
loading paper 34
loading print materials 35
loading transparencies 35

N

Network <x> Setup (Network Menu) 138
Network Buffer (Network Menu) 138
Network Menu 137
Job Buffering 137
MAC Binary PS 138
Network <x> Setup 138
Network Buffer 138
NPA Mode 139
PCL SmartSwitch 139
PS SmartSwitch 140
network port 137
buffer size 138
NPA mode 139
PCL SmartSwitch 139
PS SmartSwitch 140
NPA Hosts (LocalTalk Menu) 135
NPA Mode (Infrared Menu) 127
NPA Mode (LocalTalk Menu) 135
NPA Mode (Network Menu) 139
NPA Mode (Parallel Menu) 155
NPA Mode (Serial Menu) 164
NPA Mode (USB Menu) 179
n-up printing 122

O

operator panel 8
ordering supplies 53
Orientation (PCL Emul Menu) 152

P

Page Protect (Setup Menu) 170
paper
avoiding jams 47
choosing letterhead 20
choosing preprinted forms 20
choosing pre-punched 20
clearing jams 57
if requested size not loaded 147
recommended types 19
specifying custom type 142
specifying preprinted forms 143
specifying size 144
specifying source 144
specifying texture 145
specifying type 146
specifying weight 147
storing 45
unacceptable types 20
paper jams 57
200 Paper Jam Remove Cartridge 59
201 Paper Jam Remove Cartridge 59
202 Paper Jam Open Rear Door 60
230 Paper Jam Check Duplex 63
24x Paper Jams Check Tray x 66
250 Paper Jam Check MP Feeder 71
260 Paper Jam Check Env Feeder 71
reprinting pages 170
paper length guide 30
Paper Loading (Paper Menu) 143
Paper Menu 141
Configure MP 141
Custom Types 142
Envelope Enhance 142
Paper Loading 143
Paper Size 144
Paper Source 144
Paper Texture 145
Paper Type 146
Paper Weight 147
Substitute Size 147
Universal Setup 148
Paper Size (Paper Menu) 144
Paper Source (Paper Menu) 144
Paper Texture (Paper Menu) 145
paper tray, length guide 30
paper tray, width guide 30
Paper Type (Paper Menu) 146
Paper Weight (Paper Menu) 147
paper, letterhead 20
Parallel Buffer (Parallel Menu) 156
Parallel Menu 154
Advanced Status 154
Honor Init 155
Job Buffering 155
NPA Mode 155
Parallel Buffer 156
Parallel Mode 1 156

Parallel Mode 2 156
PCL SmartSwitch 157
Protocol 158
PS SmartSwitch 157
Parallel Mode 1 (Parallel Menu) 156
Parallel Mode 2 (Parallel Menu) 156
parallel port 154
bidirectional communication 154
configuring buffer size 156
configuring protocol 158
data sampling 156
enabling resistors 156
hardware initialization 155
NPA mode 155
PCL SmartSwitch 157
PS SmartSwitch 157
Parity (Serial Menu) 164
PCL Emul Menu 149
A4 Width 149
Auto CR after LF 150
Auto LF after CR 150
Font Name 150
Font Source 151
Lines per Page 151
Orientation 152
Pitch 152
Point Size 152
Symbol Set 153
Tray Renumber 153
PCL emulation 149
automatic carriage return 150
automatic line feed 150
font name 150
font source 151
lines per page 151
orientation 152
pitch 152
point size 152
printing font samples 176
resident fonts 192
symbol set 153
tray renumber 153
PCL SmartSwitch (Infrared Menu) 127
PCL SmartSwitch (LocalTalk Menu) 136
PCL SmartSwitch (Network Menu) 139
PCL SmartSwitch (Parallel Menu) 157
PCL SmartSwitch (Serial Menu) 165
PCL SmartSwitch (USB Menu) 179
PictureGrade (Quality Menu) 160
Pitch (PCL Emul Menu) 152, 189
Point Size (PCL Emul Menu) 152, 189
PostScript emulation 159
font priority 159
printing font samples 176
printing PS errors 159
resident fonts 192
PostScript Menu 159
Font Priority 159
Print PS Error 159
Power Saver (Setup Menu) 171
power saver, configuring 171
PQET (Quality Menu) 160
preprinted forms 20
pre-punched paper 20
Print and Hold function (held jobs) 12
Print Buffer (Job Menu) 132
print cartridge, replacing 48
Print Directory (Utilities Menu) 176
Print Fonts (Utilities Menu) 176
print materials 18
degree of smoothness 19
direction of grain 19
fiber content 19
moisture content 19
tendency to curl 19
weight specifications 18
Print Menus (Utilities Menu) 177
Print Net<x> Setup (Utilities Menu) 177
Print PS Error (PostScript Menu) 159
print quality 160
adjusting PictureGrade 160
adjusting resolution 161
character smoothing 160
toner darkness 161
Print Resolution (Quality Menu) 161
print statistics 170
Print Timeout (Setup Menu) 171
print timeout, configuring 171
Printer Language (Setup Menu) 172
printer testing, Hex Trace mode 176
printer with paper handling options 7
printer, resetting 132
printing
folio size paper 17
font samples 198
held jobs 12
job statistics 176
list of menu settings 177
statement size paper 17
Protocol (Parallel Menu) 158
PS SmartSwitch (Infrared Menu) 128
PS SmartSwitch (LocalTalk Menu) 136
PS SmartSwitch (Network Menu) 140
PS SmartSwitch (Parallel Menu) 157
PS SmartSwitch (Serial Menu) 165
PS SmartSwitch (USB Menu) 180

Q

Quality Menu 160
PictureGrade 160
PQET 160
Print Resolution 161
Toner Darkness 161

R

recommended paper types 19
replacing
charge roll 49
fuser 51
print cartridge 48
transfer roll 50
Reset Printer (Job Menu) 132
resetting maintenance counter 52
resetting printer 132
resident fonts 192
Resource Save (Setup Menu) 172
Robust XON (Serial Menu) 166
RS-232/RS-422 (Serial Menu) 166
RS-422 Polarity (Serial Menu) 166

S

scalable fonts 191
definition 191
resident 192
Separator Sheets (Finishing Menu) 123
Separator Source (Finishing Menu) 124
Serial Buffer (Serial Menu) 167
Serial Menu 162
Baud 162
Data Bits 163
Honor DSR 163
Job Buffering 163
NPA Mode 164
Parity 164
PCL SmartSwitch 165
PS SmartSwitch 165
Robust XON 166
RS-232/RS-422 166
RS-422 Polarity 166
Serial Buffer 167
Serial Protocol 167

serial port
configuring 162
buffer size 167
DSR (Data Set Ready) signals 163
NPA mode 164
parity 164
PCL SmartSwitch 165
polarity 166
protocol 167
PS SmartSwitch 165
robust XON 166
transmission speeds 162, 163
Serial Protocol (Serial Menu) 167
Setup Menu 168
Alarm Control 168
Auto Continue 169
Display Language 169
Download Target 169
Jam Recovery 170
Job Accounting 170
Page Protect 170
Power Saver 171
Print Timeout 171
Printer Language 172
Resource Save 172
Toner Alarm 172
Wait Timeout 173
size sensing 17
statement size 17
statistics, printing 176
statistics, storing 170
storing paper 45
Substitute Size (Paper Menu) 147
supplies 53
charge roll 53
fuser assembly 54
label fuser cleaner 53
maintenance kit 53
ordering 53
print cartridges 53
storing 55
transfer roll 54
Symbol Set (PCL Emul Menu) 153
symbol sets, definition 197

T

test printing, Hex Trace mode 176
test printing, menus page 177
timeout, print 171
timeout, wait 173
toner alarm 172
Toner Alarm (Setup Menu) 172
Toner Darkness (Quality Menu) 161
transfer roll, replacing 50
Transmit Delay (Infrared Menu) 128
tray linking 46
Tray Renumber (PCL Emul Menu) 153
TrueType fonts 191
typeface, description 189

U

unacceptable paper types 20
Universal Setup (Paper Menu) 148
USB Buffer (USB Menu) 180
USB Menu 178
Job Buffering 178
MAC Binary PS 179
NPA Mode 179
PCL SmartSwitch 179
PS SmartSwitch 180
USB Buffer 180
USB port 178
configuring buffer size 180
NPA mode 179
PCL SmartSwitch 179
PS SmartSwitch 180
Utilities Menu 174
Defragment Flash 174
Factory Defaults 175
Format Disk 175
Format Flash 175
Hex Trace 176
Job Acct Stat 176
Print Directory 176
Print Fonts 176
Print Menus 177
Print Net<x> Setup 177

W

Wait Timeout (Setup Menu) 173
wait timeout, configuring 173
width guide 30
Window Size (Infrared Menu) 129

Lexmark and Lexmark with diamond design are trademarks of Lexmark International, Inc., registered in the United States and/or other countries.
© 2001 Lexmark International, Inc.
740 West New Circle Road
Lexington, Kentucky 40550