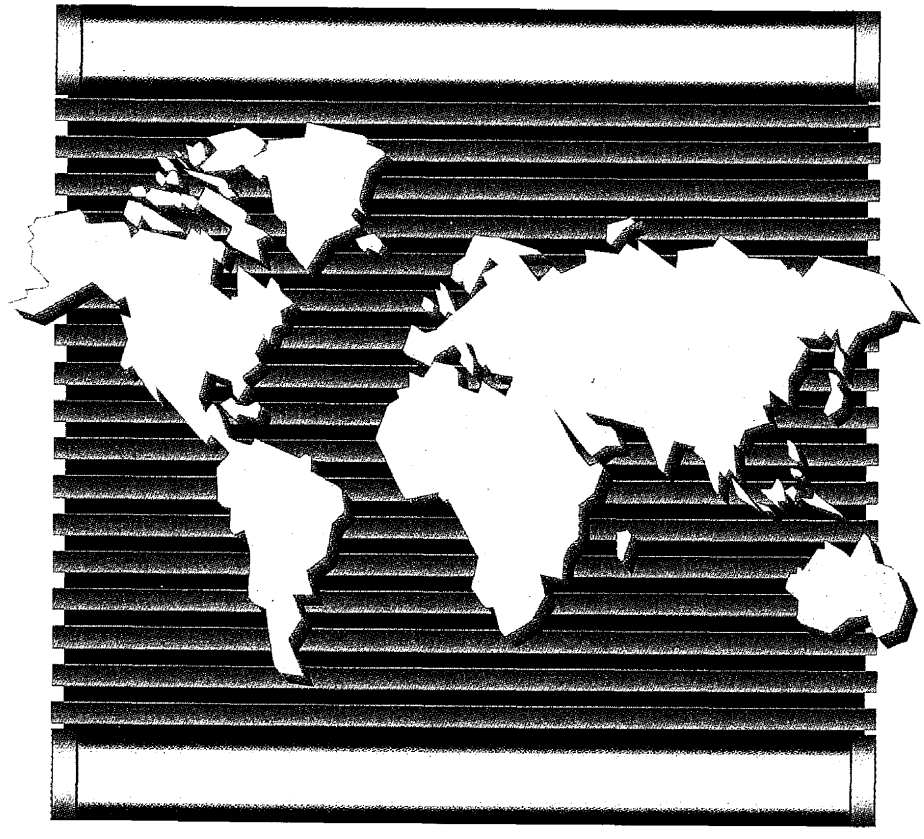

MITEL®

SX-20*
SUPERSWITCH*
COMMUNICATIONS SYSTEM GENERAL DESCRIPTION

CONTENTS PAGE

1. GENERAL 1
Introduction 1

2. GENERAL DESCRIPTION 1
Maintenance 2
System Expansion 2

3. PHYSICAL DESCRIPTION 2
Chassis 2
Printed Circuit Cards 3
Primary Power Supply 3
Cooling Fan 3
Attendant Console 3
Remote Call Status Display 3

4. FEATURES 3
General 3
Feature Provisioning 3

5. ELECTRICAL CHARACTERISTICS 5

6. SYSTEM OPERATION 6

7. SYSTEM CONFIGURATION 7
General 7
Call Status Display 8
Attendant Console 8
Remote Call Status Display 8

8. INSTALLATION AND MAINTENANCE REQUIREMENTS 8
Installation 8
Maintenance 9

9. FEATURES DESCRIPTION 9
General 9
Basic Features 9
Common Optional Features 10
Optional Hotel/Motel Features 11
Optional Business Features 11

1. GENERAL

Introduction

1.01 This section contains a brief description of the SX-20 Communications System, and the features and services.

1.02 This section has been reissued to update Table 3-1 and to incorporate minor corrections.

2. GENERAL DESCRIPTION

2.01 The SX-20 is an extremely compact and reliable electronic telephone communications system employing solid state space division switching and stored program control. The system can accommodate up to 8 trunks and 72 lines or 12 trunks and 48 lines using either a fixed or flexible numbering plan. The SX-20 is compatible with most existing key telephone, Private Branch Exchange (PBX) and Central Office (CO) equipment and provides -

- low power consumption
- small size
- maximum of five card types
- simultaneous use of DTMF and Rotary Dial stations
- selection of fixed or flexible numbering plans
- selectable feature packages
- two power failure transfer circuits
- standard cabinet call status display, optional remote display
- console operations provided by standard six or ten button key set

2.02 The SX-20 consists of a single unit containing the system power supply, switching circuitry and the call status display. All connections

© MITEL Corporation 1979

* Trademark of MITEL Corporation

between the SX-20, the distribution frame and the key set console are made using 25 pair connectorized cables.

2.03 Attractive design, small size (approximately 1 cubic foot) and the capability of wall or desk mounting allows the SX-20 to be located in any office environment.

Maintenance

2.04 The low card count (maximum of five card types), modular design, and functional packaging of the SX-20 permits rapid location of a defective item in the event of a circuit malfunction. If a malfunction occurs, the automatic diagnostic routines indicate to the service personnel, via the CPU, the suspect field replaceable unit.

System Expansion

2.05 System expansion is achieved by the addition of printed circuit cards. Lines are added in increments of 24 and CO trunks in increments of two. The maximum configuration being 72 lines and 8 CO trunks.

3. PHYSICAL DESCRIPTION

3.01 The SX-20 consists of a metal chassis (holding the circuit cards, power supply, etc) and an impact resistant plastic cover. The overall dimensions of the SX-20 are shown in Fig. 3-1, the total weight of a fully equipped system is approximately 29 lbs. (13.2kg).

Chassis

3.02 The SX-20 chassis holds the system power supply, the cooling fan, the console connector card and the equipment backplane. The equipment cards plug into the backplane and are held in position by card retainers. The hinged chassis side panel allows easy access to the circuit cards for removal and insertion. The chassis is completely enclosed by the lockable equipment case.

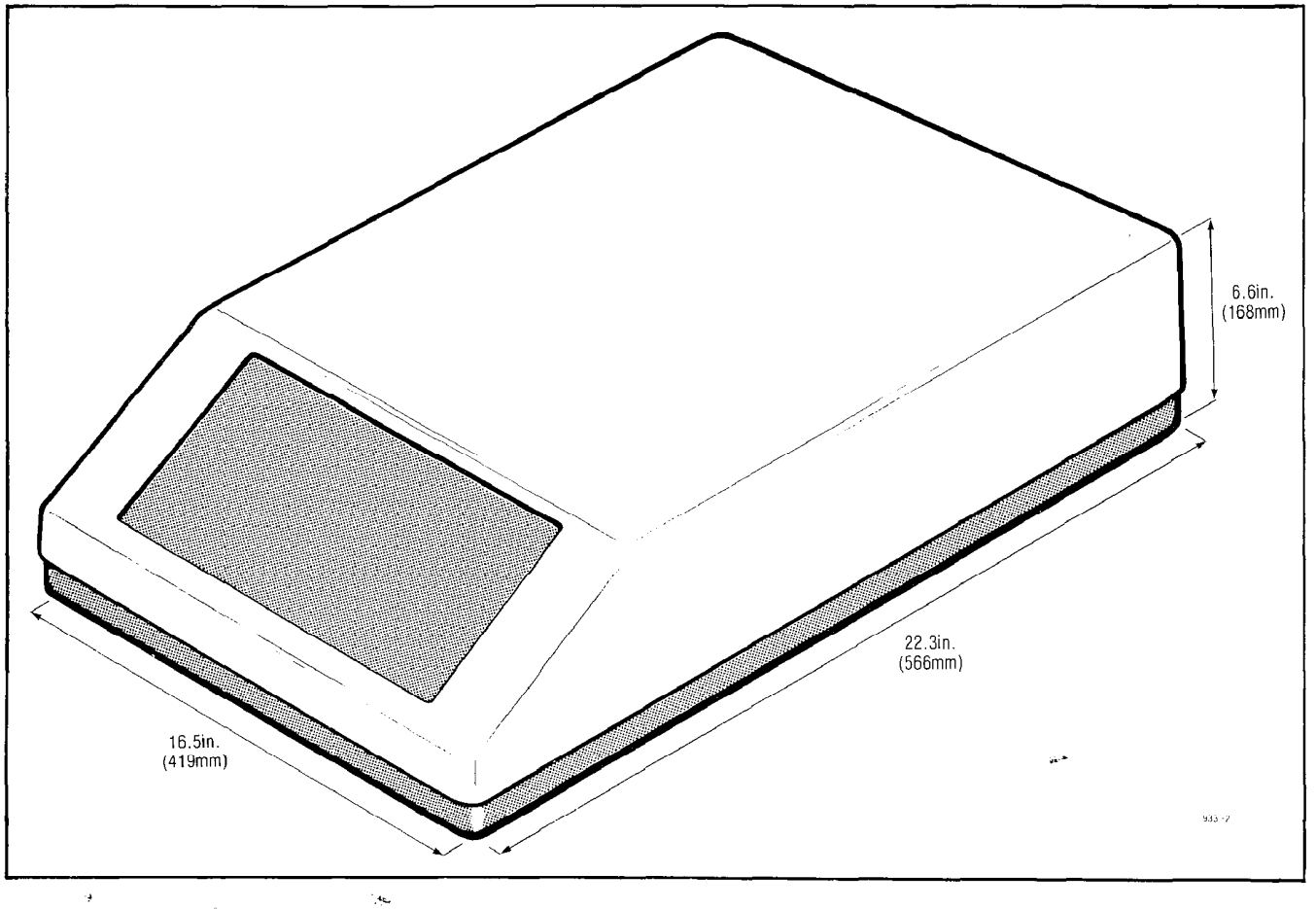

Fig. 3-1 SX-20 Equipment Cabinet

Printed Circuit Cards

3.03 All printed circuit cards employed in the system are identical in construction and consist of a fiberglass board with printed circuit patterns on both of its faces. Located on the front edge of the circuit boards is an extractor clip which allows the cards to be easily removed from the equipment chassis. Table 3-1 lists the card types, their dimensions and weights.

TABLE 3-1
CARD TYPES

Card Type	Dimensions	Weight
CPU Card	10.2in. × 16in. (259mm × 406mm)	2 lbs. (.9kg)
Miscellaneous Card	10.2in. × 16in. (259mm × 406mm)	1.5 lbs. (.675kg)
Line Card	8in. × 10.7in. (203mm × 272mm)	1.2 lbs. (.54kg)
Trunk Module	6in. × 4.38in. (152mm × 11mm)	.37 lbs. (.17kg)
Trunk Expander Board	8in. × 10.7in. (203mm × 272mm)	1.0 lbs. (.22kg)

1489

Primary Power Supply

3.04 The primary power supply for the system is mounted at the rear of the equipment chassis and provides all system power from a 90 -125Vac, 47 - 63Hz, input with a maximum current drain of 3A (230V operation optional).

Cooling Fan

3.05 A quiet, low speed cooling fan is mounted at the rear of the cabinet. The fan draws cooling air through a filter mounted at the base of the cabinet and passes it over the circuit boards. The cooling air exits through vents in the side of the cabinet. A temperature sensor protects the circuit cards in the event of a fan failure by automatically disconnecting the power feed.

Attendant Console

3.06 The optional attendant console used with the SX-20 may be any compatible six or ten button key set. The console is connected to the equipment cabinet by a connectorized 25 pair cable. The console Call Status Display, located in the equipment cabinet, shows the active status of each line and trunk on a busy lamp field and the time or the called and calling numbers on an eight digit numerical display.

3.07 The attendant console is not supplied by MITEL and can be any six or ten button key set wired to the USA standard. Refer to Section MITL9102-98-200 for wiring details.

Remote Call Status Display

3.08 The optional Remote Call Status Display shows basically the same call handling information as the standard display and allows the console to be located up to 650 feet (200m) from the equipment cabinet (refer to 7.05). The overall dimensions of the display unit are shown in Fig. 3-2.

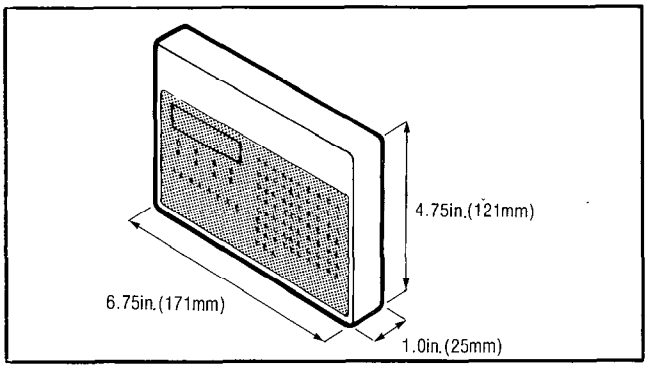

Fig. 3-2 SX-20 Remote Call Status Display

4. FEATURES

General

4.01 The SX-20 has a basic features package (Table 4-1) which is provided with every system, and two mutually exclusive optional packages. The Hotel/Motel package (Table 4-2) contains all basic features plus a number of features directed to the hotel/motel environment. The Business package (Table 4-3) provides the basic features plus a number of features specially suited for business use.

Feature Provisioning

4.02 All station features provided by the SX-20 may be grouped into four different Classes-Of-Service (COS), each class-of-service may contain any mixture of features. Feature installation consists of entering into the system memory the number of the station to which the features are to be assigned, followed by the required class-of-service code. All data entries into the system may be made from the attendant console or test line.

TABLE 4-1
BASIC FEATURES PACKAGE

Attendant Access
Attendant Camp-On With Indication
Attendant Hold
Automatic Day - Trunk Answer From Any Station (TAFAS) Transfer
Automatic Station Release
Called Station Number Display
Calling Station Number Display
Class-of-Service (4)
Console-Less Operation
Digital Clock
Direct Outward Dialing
Flash For Attendant
Incoming Call Identification
Lockout
Lockout With Secrecy
Mixed Station Dialing (Push button dialing requires optional SX-20 DTMF Receiver Module)
Power Fail Restart - Battery Hold
Power Fail Restart - ROM
Power Fail Transfer (2)
Station Status Display
Station To Station Dialing
Through Dialing
Timed Recall
Toll Restriction
Transfer/Add-On/Consultation Hold - All Calls
Transfer Dial Tone
Trunk Answer From Any Station (TAFAS)
Trunk Status Display
Trunk Groups (4)

1490

TABLE 4-2
HOTEL/MOTEL FEATURES PACKAGE

Basic Features Package,
Table 4-1, plus the following features

Controlled Station to Station Restriction
Direct In Lines
Discriminating Ringing
Fixed Night Service
Flexible Night Service
Flexible Numbering Plan
House Phone
Message Registration
Message Waiting (Audible)
Toll Restriction (Extended)
Paging - Attendant
Restrictive Station Control

1487

TABLE 4-3
BUSINESS FEATURES PACKAGE

Basic Features Package,
Table 4-1, plus the following features

Automatic Callback Busy
Call Forwarding - Follow Me
Call Forwarding - Busy
Call Hold (Station)
Dial Call Pickup
Direct In Lines
Discriminating Ringing
Fixed Night Service
Flexible Night Service
Flexible Numbering Plan
Paging - Attendant
Toll Restriction (Extended)
Voice Paging - Stations

1488

To prevent the loss of customer data in the event of a complete system power failure, the memory holding the data associated with each line and trunk is equipped with its own reserve power supply. This power supply is sufficient to maintain the memory intact for up to four weeks.

5. ELECTRICAL CHARACTERISTICS

5.01 The electrical characteristics of the SX-20 are listed in Table 5-1.

5.02 In the event of a power failure the SX-20 can be arranged to automatically connect up to two Central Office trunks to pre-selected extensions.

6. SYSTEM OPERATION

6.01 The SX-20 is a solid-state communications system employing space division switching and microprocessor control of call processing. A block diagram of the SX-20 is shown in Fig. 6-1.

6.02 The microprocessor can access all areas of the SX-20 either for information or to change the state of equipment. The microprocessor scans the lines, trunks and the attendant console, and controls the connections to the 12 speech paths. All the lines, trunks and the

TABLE 5-1
SX-20 ELECTRICAL CHARACTERISTICS

PARAMETER	DETAIL
Station Loop Limit	600 ohms including set
Minimum Leak Resistance	15,000 ohms
Maximum Number of Ringers per Line	5
Ringing Voltage	90V, 20Hz
Ring Trip	During silent or ringing period
Dial Tone	350/440Hz, continuous
Busy Tone	480/620Hz, 500ms On, 500ms Off
Ringback Tone	440/480Hz, 1 sec On, 3 sec Off
Reorder Tone	480/620Hz, 250ms On, 250ms Off
Camp-on Tone	440/480Hz, one burst of 200ms
Crosstalk	Better than 75dB down
Insertion Loss, Station to Station Station to Trunk	5dB ±0.5dB at 1000Hz 0.6dB ±0.4dB at 1000Hz
Longitudinal Balance	60dB minimum, 200-3400Hz (on trunks)
Return Loss	16dB singing, 24dB echo
Idle Circuit Noise	16BrnC maximum
Impulse Noise	0 counts above 47dBrnC for 90% of cases
System Impedance	600 ohms nominal for lines 900 ohms nominal for trunks
Traffic Capacity	7.2ccs/line minimum at 24 lines and P = 0.01 3.6ccs/line minimum at 48 lines and P = 0.01
Primary Power	90-125VAC, 47-63Hz, 3A maximum, 1A typical (230V operation optional)
Central Office Loop Limit	1600 ohms maximum
Maximum Distance of Console from Equipment Cabinet	650ft. (200m) of 26AWG cable

1485

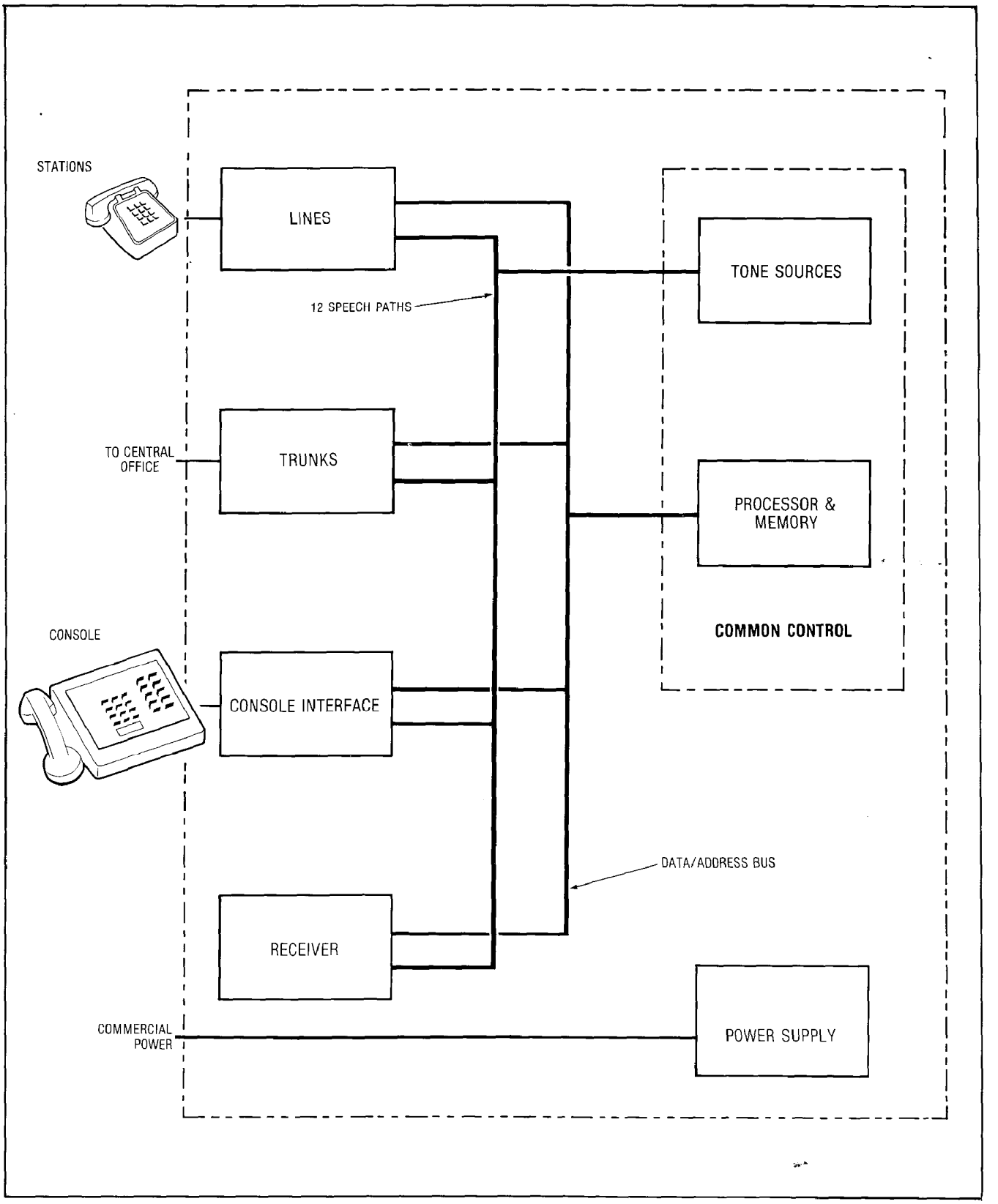

Fig. 6-1 SX-20 Block Diagram

attendant console have access to each of the 12 speech paths.

7. SYSTEM CONFIGURATION

General

7.01 The SX-20 equipment cabinet consists of a metal chassis and a moulded plastic cover. The removable cover allows access to the circuit cards and power supply held on the equipment chassis (Fig. 7-1). The system uses three main types of circuit cards, line cards, miscellaneous card, and the PROM/CPU card. Each of the card types have a keyed connector preventing a card from being plugged into the wrong card slot.

7.02 All circuit cards used in the system are constructed of fibreglass sheet with printed circuit tracks on both faces. The cards perform the following functions:

- **Line Card.** Each line card provides 24 line circuits which serve as interfaces between the station equipment and the SX-20 switching circuits. Housed on the front of the line cards are 24 LEDs which indicate the state (on - busy, interrupted - ringing, off -idle) of each line circuit. A maximum of three line cards may be employed in the system.

- **PROM/CPU Card.** This card holds the Programmable Read Only Memory (PROM) containing the system operating programs, the microprocessor and the CMOS Random Access Memory (RAM) holding the customer data. The RAM is protected against power failure, and therefore loss of customer data, by a battery pack housed on the CPU card. This back-up power will maintain the RAM data for up to 600 hours.

- **Miscellaneous Card.** This circuit card accomodates the interface to the console, the DTMF sender, DTMF receivers (if required), and up to four dual trunk cards, it also produces the required call progress tones and provides the interface to the customer provided paging equipment. The Trunk Call Status LEDs on the front of the card show the status of each trunk circuit. Located at the front of the card is an eight digit display. This display shows the calling and called numbers, the time-of-day when the console is idle, and in the event of a malfunction, the error code indicating the faulty circuit. A switch on the PROM/CPU

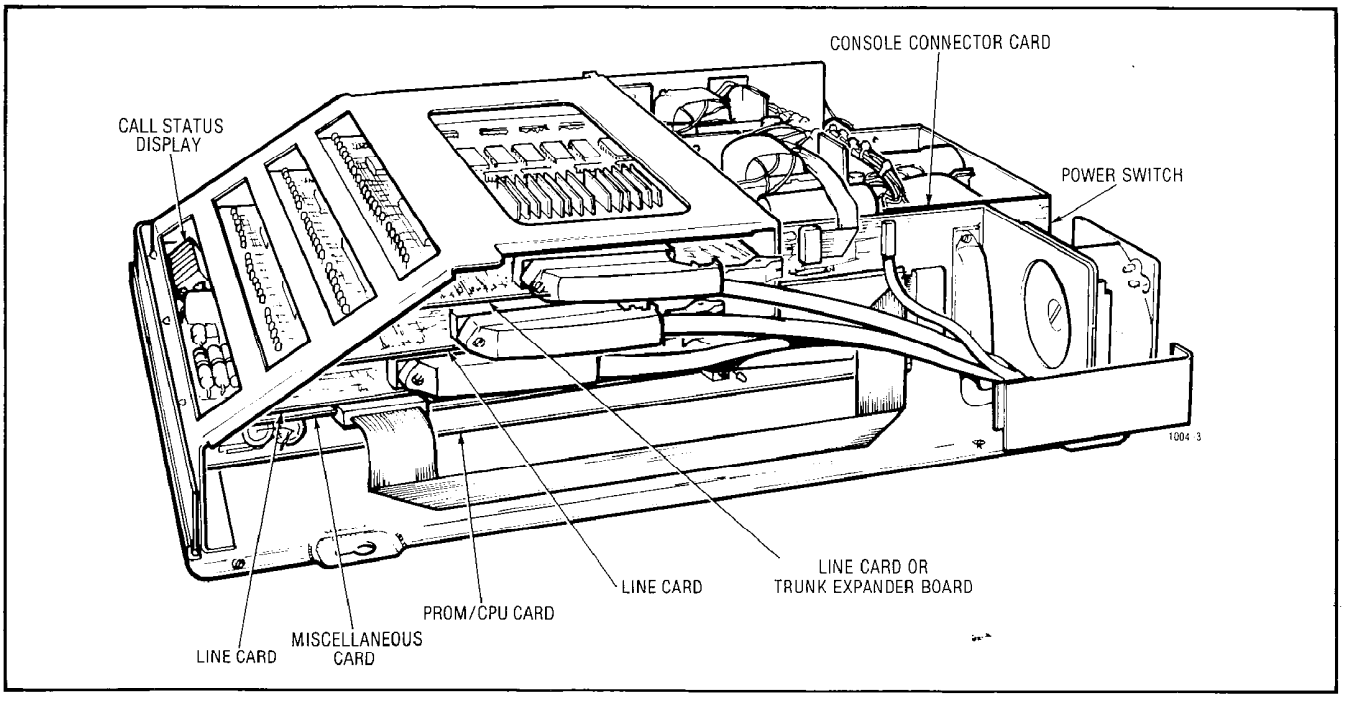

Fig. 7-1 SX-20 Equipment Layout

card allows the eight digit display to be inverted if the system is mounted vertically.

- **Trunk Card.** The trunk card provides access to two CO trunks and up to four such cards may be mounted on the miscellaneous card.

- **Trunk Expander Board.** This circuit card is used, to expand the SX-20 trunk capability upto 12 trunks. The Trunk Expander Board will hold up to two trunk cards, each trunk card providing access to two CO trunks. When this board is used it replaces the top line card.

Call Status Display

7.03 The Call Status Display consists of the line and trunk status LEDs and the numerical display. The display is seen through the transparent face plate mounted on the front of the chassis.

Attendant Console

7.04 Any compatible six or ten button key set using a 50 contact male plug (wired as detailed in Section MITL9102-98-200) may be used as an attendant console with the SX-20. Fig. 7-2 shows the button designation of a typical six and ten button key set.

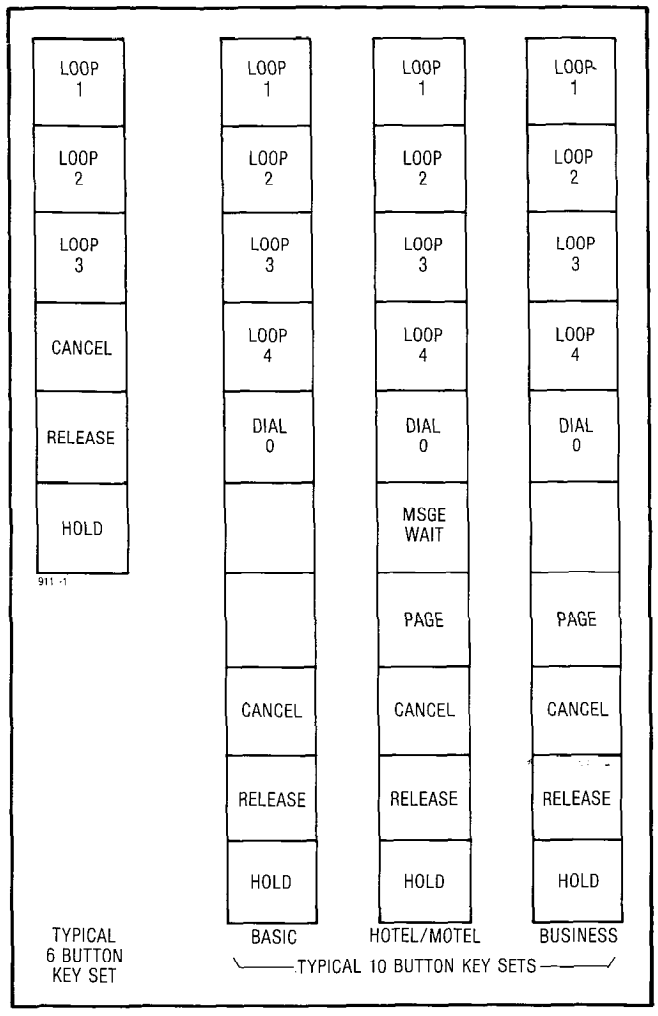

Fig. 7-2 Button Designations

7.05 The optional Remote Call Status Display provides -

- busy/idle status display of each station and trunk
- equipment maintenance busy indication
- night/day service indication
- call/calling number display
- time-of-day display

In addition to the call status indications the remote display allows the test line to program and troubleshoot the system while the console processes traffic. This is accomplished by providing the attendant with call handling information via the Remote Call Status Display and the craft person with programming and maintenance information via the system Call Status Display.

8. INSTALLATION AND MAINTENANCE REQUIREMENTS

Installation

8.01 Installation of the SX-20 consists of placing the equipment cabinet in the desired position. The insertion of the connectorized house and console cables into their sockets, the application of power and programming the desired customer data. System expansion is achieved by the insertion of additional plug in circuit boards.

Maintenance

8.02 The occurence of a malfunction is detected by automatic diagnostics and displayed as an error code on the Call Status Display. This code specifies to the service personnel the circuit card causing the malfunction. Maintenance is therefore limited to replacing one of the five circuit card types.

9. FEATURES DESCRIPTION

General

9.01 The following gives a brief description of each feature listed in Tables 4-1, 4-2 and 4-3. For a full description of each feature refer to Section MITL9102-98-105.

Basic Features

9.02 The following features are included in the SX-20 basic feature package.

- **Attendant Access.** This feature automatically routes a station dialing 0 to the attendant console, the attendant is alerted to the call by the DIAL 0 Lamp flashing on the 10 button set or a flashing Loop Key Lamp on the six button set.

- **Attendant Camp-On with Indication.** When the attendant extends an incoming trunk call to a busy station, the incoming call is "camped-on" the busy station . The busy station hears a tone, indicating that a call is waiting. When the busy station hangs up it is rung and connected to the incoming call.

- **Attendant Hold.** The attendant may place any call on hold, the held line being indicated to the attendant by a flashing lamp. The held call may be retrieved by pressing the key associated with the flashing lamp.

- **Automatic Day - Trunk Answer From Any Station (TAFAS) Transfer.** This feature causes incoming calls (extension or trunk calls) directed to the attendant console to be routed to the TAFAS equipment if they are not answered within a predetermined time. See TAFAS.

- **Automatic Station Release.** Stations which do not hang up at the end of a call, or which go off-hook and do not dial for a predetermined length of time, are released from the common equipment.

- **Called Station Display.** Each station or trunk dialed from the attendant console is displayed on the numeric Call Status Display.

- **Calling Station Display.** As each call is answered at the attendant console the Call Status Display changes to show the number of the calling station or trunk.

- **Classes-of-Service.** The SX-20 provides four classes-of-service which may be assigned to a station to allow or deny access to system features. Each class-of-service may contain any combination of features desired.

- **Console-less Operation.** The SX-20 may be operated without a console. Incoming trunk calls are handled using the Trunk Answer From Any Station feature, in conjunction with Station Call Transfer.

- **Digital Clock.** When the console is idle the numerical portion of the Call Status Display continuously shows the time-of-day. The time display may be updated from the console at any time the console is not in use.

- **Direct Outward Dialing.** Station users, with the correct COS, may directly access Central Office (CO) trunks by dialing an access code. Attendant assistance is not required for call completions.

- **Flash for Attendant.** This feature allows a station user who has an established call, to flash the switchhook and automatically be connected to the attendant console. The call appears on the console as a "Dial 0" call.

- **Incoming Call Identification.** Three loop buttons on the six button set and four on the ten button set, allow the attendant to answer incoming calls to the customer's Listed Directory Numbers. When an out-

side call is made, the lamp associated with the incoming call flashes, allowing the attendant to select the call by pressing the required loop button and answer with the correct response.

- **Lockout.** The attendant cannot re-enter an incoming Central Office call completed through the console unless recalled by the station user.

- **Lockout with Secrecy.** If the attendant is recalled by a station user on a Central Office call, the Central Office party is excluded from the conversation when the attendant answers, allowing the station user to consult privately with the attendant.

- **Mixed Station Dialing.** The SX-20 can accommodate rotary dial and DTMF stations simultaneously through the use of the optional SX-20 DTMF Receiver module.

- **Power Fail Restart - Battery Hold.** When the primary power fails the customer data is maintained by a battery pack on the PROM/CPU card. This battery pack will maintain the memory intact for up to 600 hours.

- **Power Fail Restart - ROM/PROM.** The SX-20 operating program is contained in a non-volatile memory which is unaffected by power failures.

- **Power Failure Transfer.** In the event of a commercial power failure two CO trunks are automatically switched to predetermined stations.

- **Station Status Display.** Each station in the SX-20 has a station status LED which indicates the state (on - busy, flashing - ringing, off - idle) of the station. These LEDs together with the Trunk Status LEDs and the Numeric Display form the Call Status Display.

- **Station-To-Station Dialing.** The SX-20 allows calling between stations by direct dialing. Attendant assistance is not required for call completion.

- **Through Dialing.** Stations may gain access to Central Office parties through the attendant by dialing "0". The attendant can select an outgoing trunk and connect the station to it, allowing the station to dial the desired number, or the attendant can dial the number and then connect the station to the trunk.

- **Timed Recall.** Calls extended to stations from the attendant console that are not answered within a specified time are automatically recalled to the attendant.

- **Toll Restriction.** Stations may be restricted from making toll calls by their Class-of-Service assignment. The SX-20 detects toll calls by recognizing 0 or 1 as the first or second digit dialed after trunk access.

- **Transfer/Add-On/Consultation Hold - All Calls.** Stations may consult with another party while on any call (except an attendant call) by flashing the switchhook and dialing the required number. The other party to the call is held during this time and is excluded from the conversation. The station user may transfer the consulted party to the held party by hanging up.

  The consulted party may also be added-on to the held party and the original station, (forming a 3-way conversation) by the original station flashing the switchhook a second time.

- **Transfer Dial Tone.** This distinctive tone is received in place of regular dial tone when an extension flashes to put an established call on Hold in order to Consult or Transfer the call.

- **Trunk Answer From Any Station (TAFAS).** This is a night service feature which permits any nonrestricted station to answer an incoming call to the attendant, by dialing a special access code.

- **Trunk Status Display.** Each trunk in the SX-20 is assigned a Trunk Status LED which indicates the state (on - busy, off - idle, flashing - busied out) of the trunk. These

LEDs together with the station status LEDs and the Numeric Display form the Call Status Display.

- **Trunk Groups.** The SX-20 may be assigned up to four independant trunk groups, each trunk group having a different access code.

Common Optional Features

9.03 The following features are contained in both optional feature packages in addition to those described in paragraph 9.02.

- **Direct in Lines.** A trunk may be assigned to a station so that incoming calls on a trunk ring the station directly. The station is the same as any other SX-20 station in all other respects.

- **Discriminating Ringing.** Two types of ringing are provided, to distinguish between inside calls and outside calls.

- **Fixed Night Service.** When the SX-20 is in night service, incoming calls or Central Office trunks are routed directly to predetermined stations or night bells.

- **Flexible Night Service.** This feature allows the attendant to assign stations to trunks for night service. During night service, incoming calls on these trunks will be routed directly to the station assigned by the attendant.

- **Flexible Numbering Plan.** The SX-20 numbering scheme is completely flexible (stations may be assigned 1, 2 or 3 digit numbers and access codes 1 or 2 digits) as long as no conflicting first digits are used.

- **Toll Restriction (extended).** This feature allows individual extensions to be restricted from making selected toll calls.

- **Paging - Attendant.** This feature allows the attendant access to customer provided paging equipment. Access is provided by pressing the PAGE key on the ten button console.

Optional Hotel/Motel Features

9.04 The following features are provided in the Hotel/Motel Features Package in addition to those described in paragraphs 9.02 and 9.03.

- **Controlled Station-to-Station Restriction.** When this feature is activated by the attendant, calls between stations with 'Controlled Station-to-Station Restriction' in their COS are routed to Reorder Tone. Calls to stations without this feature, are completed in the normal manner.

- **House Phone.** When a station designated as a house phone goes off-hook it is automatically connected to the attendant console. The call appears on the console as a Dial 0 call.

- **Message Registration.** The system keeps an account of all completed local CO calls on a station basis. The station message data may be shown on the Call Status Display by dialing a code from the console.

- **Message Waiting - Audible.** The attendant can signal a station that there is a message waiting by pressing the MSGE WAIT button on the ten button console. This causes the station to periodically ring, indicating that there is a message waiting.

- **Restrictive Station Control.** Allows the attendant to temporarily restrict any station from accessing a trunk, station-to-station calls may be made normally. This feature may be used to restrict trunk calls from being made from rooms listed as 'Unoccupied'.

Optional Business Features

9.05 The following features are provided with the Business Feature Package in addition to those described in paragraphs 9.02 and 9.03.

- **Automatic Callback - Busy.** This allows an extension upon encountering a busy extension or access code to have the call completed when the busy number becomes free.

- **Call Forwarding - Follow Me.** This feature allows an extension user to have all incoming calls rerouted to any selected number within the SX-20.

- **Call Forwarding - Busy.** This feature allows an extension user to have all calls directed to the extension, routed to any selected number within the SX-20 when the extension if busy. This feature has no effect on incoming calls when the extension is idle.

- **Call Hold.** Call Hold allows an extension user engaged in an active call, to place the call on hold and use the extension for other calls. All features normally active on the extension may be selected while the call is held. The held call may be retrieved locally or remotely (from a different extension) by dialing the required code. The holding extension may interchange the held call with an active call by flashing the switchhook and dialing the Call Hold code. If the held call is not retrieved within the selected recall time, the holding extension is automatically recalled.

- **Dial Call Pick-up.** A station user can dial a special code to answer any incoming call ringing on a station in the station user's predetermined pick-up group.

- **Voice Paging.** A station user may, by dialing an access code, be connected to customer provided paging equipment.

A to Z KELLATRONICS, Inc.

[redacted] Tel: 800.766.3425
email: info@kellatronics.com Fax: 818.773.8899

PRINTED IN CANADA

SX-20*
SUPERSWITCH*
COMMUNICATIONS SYSTEM
PHYSICAL DESCRIPTION AND ORDERING INFORMATION

CONTENTS PAGE

1. GENERAL 1
Introduction 1

2. GENERAL DESCRIPTION 1
Maintenance 2
System Expansion 2

3. PHYSICAL DESCRIPTION 2
Chassis 2
Printed Circuit Cards 3
Primary Power Supply 3
Cooling Fan 3
Attendant Console 3
Remote Call Status Display 3

4. FEATURES 3
General 3
Feature Provisioning 3

5. ELECTRICAL CHARACTERISTICS 4

6. ORDERING INFORMATION 4
General Information 4
Installation Material and Tools 6
Warranty 6
Spares Levels 6

1. GENERAL

Introduction

1.01 This section contains a brief description of the SX-20 Communications System, the features and services provided, and the equipment ordering information. The general information contained in this document is also contained in Section MITL9102-98-100.

1.02 This section has been reissued to incorporate corrections to Table 6-1 SX-20 Basic Equipment.

2. GENERAL DESCRIPTION

2.01 The SX-20 is an extremely compact and reliable electronic telephone communications system employing solid state space division switching and stored program control. The system can accommodate up to 72 lines and 8 trunks or 48 lines and 12 trunks. The SX-20 is electrically compatible with most existing key telephone, Private Branch Exchange (PBX) and Central Office (CO) equipment and provides -

- low power consumption
- small size
- maximum of five card types
- simultaneous use of DTMF and Rotary Dial stations
- selection of fixed or flexible numbering plans
- selectable feature packages
- two power failure transfer circuits
- standard cabinet call status display, optional remote display
- console operations provided by standard six or ten button key set

2.02 The SX-20 consists of a single unit holding the system power supply, switching circuitry and the call status display. All connections between the SX-20, the distribution frame and the console (key set) are made using 25 pair connectorized cables.

2.03 Attractive design, small size (approximately 1 cubic foot) and the capability of wall or desk mounting allows the SX-20 to be located in any office environment.

© Copyright MITEL Corporation 1979

* Trademark of MITEL Corporation

Maintenance

2.04 The low card count (maximum five card types), modular design and functional packaging of the SX-20 permit rapid location of a defective item in the event of a circuit malfunction. If a malfunction occurs, the automatic diagnostic routines indicate to the service personnel, via the CPU, the suspect field replaceable unit.

System Expansion

2.05 System expansion is achieved by the addition of printed circuit cards. Lines are added in increments of 24 and CO trunks in increments of 2. The maximum configuration is 72 lines and 8 trunks, or 48 lines and 12 trunks.

3. PHYSICAL DESCRIPTION

3.01 The SX-20 consists of a metal chassis (holding the circuit cards, power supply etc.) and an impact resistant plastic cover. The overall dimensions of the SX-20 are shown in Fig. 3-1, the total weight of a fully equipped system is approximately 29 lbs. (13.2kg).

Chassis

3.02 The SX-20 chassis holds the system power supply, the console connector card, the cooling fan and the equipment backplane. The equipment cards plug into the backplane and are held in position by card retainers. The chassis is completely enclosed by the lockable equipment case.

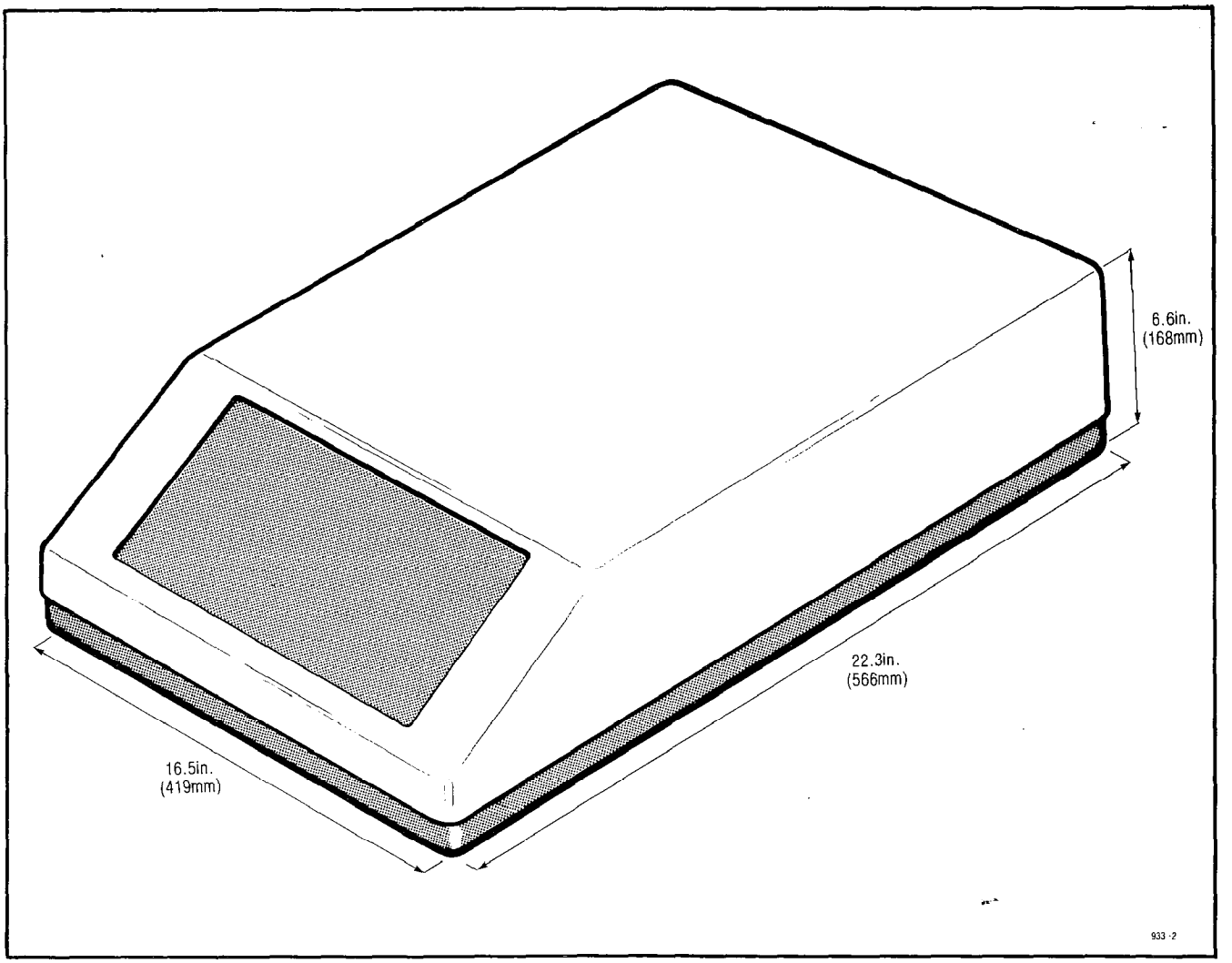

Fig. 3-1 SX-20 Equipment Cabinet

Printed Circuit Cards

3.03 All printed circuit cards employed in the system are identical in construction and consist of a fiberglass board with printed circuit patterns on both of its faces. Located on the front edge of the circuit boards is an extractor clip which allows the cards to be easily removed from the equipment chassis. Table 3-1 lists the card types, their dimensions and weight.

TABLE 3-1
CARD TYPES

Card Type	Dimensions	Weight
CPU Card	10.2in. × 16in. (259mm × 406mm)	2 lbs. (.9kg)
Miscellaneous Card	10.2in. × 16in. (259mm × 406mm)	1.5 lbs. (.675kg)
Line Card	8in. × 10.7in. (203mm × 272mm)	1.2 lbs. (.54kg)
Trunk Module	6in. × 4.38in. (152mm × 11mm)	.37 lbs. (.17kg)
Trunk Expander Board	8in. × 10.7in. (203mm × 272mm)	1.0 lbs. (.22kg)

1489

Primary Power Supply

3.04 The primary power supply for the system is mounted at the rear of the equipment chassis and provides all system power from a 90 -125Vac, 47 - 63Hz, input with a maximum current drain of 3A (230 volt operation optional).

Cooling Fan

3.05 A quiet, low speed cooling fan is mounted at the rear of the cabinet. The fan draws cooling air through a filter mounted at the base of the cabinet and passes it over the circuit boards. The cooling air exits through vents mounted in the side of the cabinet. A temperature sensor protects the circuit cards in the event of a fan failure, by automatically disconnecting the power feed.

Attendant Console

3.06 The optional attendant console used with the SX-20 may be any compatible six or ten button key set. The console is connected to the equipment cabinet by a connectorized 25 pair cable. The console Call Status Display, located in the equipment cabinet, shows the active status of each line and trunk via a busy lamp field. The time, called number and calling number are shown on an eight digit numerical display mounted on the miscellaneous card.

The attendant console is not supplied by MITEL and can be any six or ten button key set wired to the USA standard. See Section MITL9102-98-200 for wiring details.

Remote Call Status Display

3.07 The optional Remote Call Status Display shows the same call information as the standard display but allows the console to be located up to 650 feet (200m) from the equipment cabinet. The overall dimensions of the display unit are shown in Fig. 3-2.

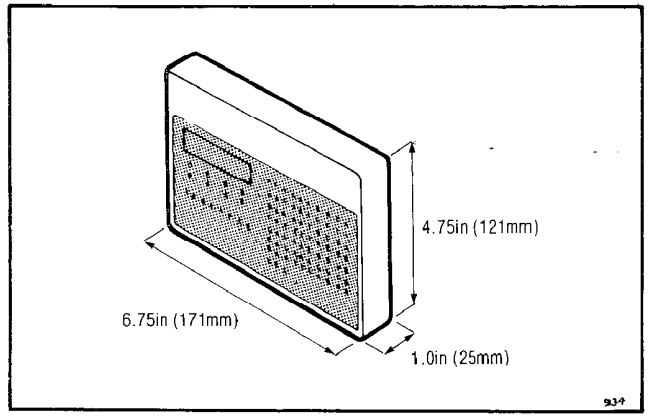

Fig. 3-2 SX-20 Remote Call Status Display

4. FEATURES

General

4.01 The SX-20 has a basic features package (Table 4-1) which is provided with every system and two mutually exclusive optional packages. The Hotel/Motel package (Table 4-2) contains all basic features plus a number of features directed to the hotel/motel environment. The Business package (Table 4-3) provides the basic features plus a number of features specially suited for business use.

Feature Provisioning

4.02 All station features provided by the SX-20 may be grouped into four different classes-of-service, each class-of-service may contain any mixture of features. Feature installation consists of entering into the system memory the number of

TABLE 4-1
BASIC FEATURES PACKAGE

Attendant Access
Attendant Camp-On With Indication
Attendant Hold
Automatic Day - Trunk Answer From Any Station (TAFAS) Transfer
Automatic Station Release
Called Station Number Display
Calling Station Number Display
Class-of-Service (4)
Console-Less Operation
Digital Clock
Direct Outward Dialing
Flash For Attendant
Incoming Call Identification
Lockout
Lockout With Secrecy
Mixed Station Dialing (Push button dialing requires optional SX-20 DTMF Receiver Module)
Power Fail Restart - Battery Hold
Power Fail Restart - ROM
Power Fail Transfer (2)
Station Status Display
Station To Station Dialing
Through Dialing
Timed Recall
Toll Restriction
Transfer/Add-On/Consultation Hold - All Calls
Transfer Dial Tone
Trunk Answer From Any Station (TAFAS)
Trunk Status Display
Trunk Groups (4)

1490

TABLE 4-2
HOTEL/MOTEL FEATURES PACKAGE

Basic Features Package,
Table 4-1, plus the following features

Controlled Station to Station Restriction
Direct In Lines
Discriminating Ringing
Fixed Night Service
Flexible Night Service
Flexible Numbering Plan
House Phone
Message Registration
Message Waiting (Audible)
Toll Restriction (Extended)
Paging - Attendant
Restrictive Station Control

1487

TABLE 4-3
BUSINESS FEATURES PACKAGE

Basic Features Package,
Table 4-1, plus the following features

Automatic Callback Busy
Call Forwarding - Follow Me
Call Forwarding - Busy
Call Hold (Station)
Dial Call Pickup
Direct In Lines
Discriminating Ringing
Fixed Night Service
Flexible Night Service
Flexible Numbering Plan
Paging - Attendant
Toll Restriction (Extended)
Voice Paging - Stations

1488

the station to which the features are to be assigned, followed by the required class-of-service code. All data entries into the system may be made from the attendant console or from the test line. To prevent the loss of customer data in the event of a complete system power failure, the memory holding the data associated with each line and trunk is equipped with its own reserve power supply. This power supply is sufficient to maintain the memory intact for up to four weeks.

5. ELECTRICAL CHARACTERISTICS

5.01 The electrical characteristics of the SX-20 are listed in Table 5-1.

5.02 In the event of a power failure the SX-20 can be arranged to automatically connect up to two Central Office trunks to pre-selected extensions.

6. ORDERING INFORMATION

General Information

6.01 The following information is provided for ease of ordering the SX-20 equipment. Table 6-1 lists the equipment provided with the basic system and Table 6-2 the optional equipment required to complete the particular requirements of a customer. Equipment may be ordered on a system basis or as individual parts.

TABLE 5-1
SX-20 ELECTRICAL CHARACTERISTICS

PARAMETER	DETAIL
Station Loop Limit	600 ohms including set
Minimum Leak Resistance	15,000 ohms
Maximum Number of Ringers per Line	5
Ringing Voltage	90V, 20Hz
Ring Trip	During silent or ringing period
Dial Tone	350/440Hz, continuous
Busy Tone	480/620Hz, 500ms On, 500ms Off
Ringback Tone	440/480Hz, 1 sec On, 3 sec Off
Reorder Tone	480/620Hz, 250ms On, 250ms Off
Camp-on Tone	440/480Hz, one burst of 200ms
Crosstalk	Better than 75dB down
Insertion Loss, Station to Station Station to Trunk	5dB ±0.5dB at 1000Hz 0.6dB ±0.4dB at 1000Hz
Longitudinal Balance	60dB minimum, 200-3400Hz (on trunks)
Return Loss	16dB singing, 24dB echo
Idle Circuit Noise	16BrnC maximum
Impulse Noise	0 counts above 47dBrnC for 90% of cases
System Impedance	600 ohms nominal for lines 900 ohms nominal for trunks
Traffic Capacity	7.2ccs/line minimum at 24 lines and P = 0.01 3.6ccs/line minimum at 48 lines and P = 0.01
Primary Power	90-125VAC, 47-63Hz, 3A maximum, 1A typical (230V operation optional)
Central Office Loop Limit	1600 ohms maximum
Maximum Distance of Console from Equipment Cabinet	650ft. (200m) of 26AWG-cable

1485

The basic system as listed in Table 6-1 provides all the features as defined by the feature package selected.

Installation Material and Tools

6.02 Installation may be accomplished using standard installation tools. No special tools or materials are required.

Maintenance Tools

6.03 Corrective maintenance requires only the use of a standard hand test set (Butt-In).

Warranty

6.04 The MITEL SX-20 Communication System is warranted against defective material and workmanship. Equipment requiring service or repair during the warranty period is to be packaged in accordance with Section MITL9102-98-200 Shipping and Receiving, and returned prepaid to the supplier. Repaired or replacement equipment will be returned to the customer, post prepaid by MITEL.

TABLE 6-1
SX-20 BASIC EQUIPMENT

Description	Quantity	Part Number	Comments
Basic SX-20 Communications System (110V operation)	1	9102-100-XXX	Last 3 digits -XXX define the software generic, 000 minus PROM assembly, 100 - Basic, 200 - Hotel/Motel, 300 - Business
Basic SX-20 Communications System (230V operation)	1	9102-200-XXX	
The above consists of the required chassis assembly and one of each of the additional items listed below.			
Chassis Assembly (110V operation)	1	9102-101	Metal work, backplane, faceplate primary power supply and cooling fan
Chassis Assembly (230V operation)	1	9102-201	Metal work, backplane, faceplate primary power supply and cooling fan
Equipment Cover	1	9102-002	Clips onto chassis metalwork.
CPU Card	1	9102-004	Accepts PROM assembly and RAM battery pack listed below.
Miscellaneous Card	1	9102-005	Accepts up to 4 Trunk Modules and 1 optional DTMF Receiver Module.
PROM Assembly	1	9102-006-XXX-YY (See Note)	3 digits -XXX define software generic, last 2 digits -YY define revision.
RAM Battery Pack	1	9102-007	Mounts on CPU card.
Fan	1	9102-008	Rear mounted on chassis.
Console Connector Card	1	9102-009	Rear mounted on chassis. Provides connection between the SX-20 and the attendant console.

Note: If XXX is specified but not YY, the latest version of the Generic Program specified will be supplied.

1486

Spares Levels

6.05 Mitel recommends a minimum spares level of 10% of installed systems, including 10% sparing of the basic system. The sparing recommended for the PROM assembly is 5%. This means that service personnel can carry a complete spare system on field trips and therefore, if required, replace a complete system.

TABLE 6-2
ADDITIONAL EQUIPMENT TO BE ORDERED TO COMPLETE CUSTOMER INSTALLATION REQUIREMENTS

Description	Part Number	Comments
Line Card (24 lines)	9102-010	System has capacity for 3 line cards.
CO Trunk Module (2 trunks)	9102-011	Provides 2 loop or ground start trunks. System has capacity for 4 modules.
DTMF Receiver	9102-012	System has capacity for 1 module.
Trunk Expander Board *	9102-013	Increases system capacity to 12 CO trunks, ie. accommodates 2 trunk modules
Remote Call Status Display **	9102-014	Provides call status information remote from the equipment cabinet.
Pack of eight SLICS	9102-015	Provided to facilitate ease of line card maintenance.
Pack of ten filters for the cooling fan	9102-016	Used to replace fan filters (once/2 years normal office environment, once/year dusty environment)
System Documentation	9102-050	Consists of all documents required to install, maintain and operate the SX-20 Communications System.
Extension Features Guide	9102-051	Details extension features operation.
Attendant Console Operation	9102-052	Details console operation.

1491

* Planned introduction 1st Quarter 1981
** Planned introduction 4th Quarter 1980

PRINTED IN CANADA

SX-20*
COMMUNICATIONS SYSTEM
SHIPPING, RECEIVING AND INSTALLATION PROCEDURES

CONTENTS PAGE

1. INTRODUCTION 1
General 1
Documentation 1

2. IDENTIFICATION 1
General 1
Chassis 1
Printed Circuit Cards 2
Primary Power Source 3
Attendant Console 3
Remote Call Status Display 3
Power Fail Transfer 3
Power Fail Transfer Reset 4
Test Line 4

3. SHIPPING AND RECEIVING 4
Introduction 4
System Packaging 4
Printed Circuit Cards Packaging 4

4. DELIVERY CHECK 4
General 4
Unpacking and Handling 4
Circuit Cards 4
Inspection 4
Printed Circuit Cards Inspection 7
Defective Items 7
Repacking for Reshipment 7

5. INSTALLATION REQUIREMENTS 8
Environmental Requirements 8
Space Requirements 8
Equipment Cabinet Location 8
Power Supply Requirements 8
Equipment Ground 9

6. CABLING AND CROSS-CONNECTIONS . 9
General 9
Telephone Set and Trunk Cabling 9
Cross-Connections 9
FCC Cross-Connection Frame Recommendations 13

7. INSTALLATION 16
General 16

APPENDIX 1
MITEL Action Procedures A1-1

APPENDIX 2
Installation Procedures A2-1/2

APPENDIX 3
FCC Interconnect Requirements A3-1

1. INTRODUCTION

General

1.01 This section provides general identification, installation, shipping, receiving and cabling information for the SX-20 Communications System. The system consists of two major components, the SX-20 equipment cabinet and the attendant console. Note the attendant console is not supplied by MITEL but can be any six or ten button key set wired to the USA standard (see 2.06).

Documentation

1.02 Table 1-1 lists all MITEL practices associated with the SX-20 Communications System.

2. IDENTIFICATION

General

2.01 The SX-20 consists of a metal chassis (holding the circuit cards, power supply etc.) and an impact resistant plastic cover. The overall dimensions of the SX-20 are height 6.6in. (168mm), width 16.5in. (419mm), length 22.3in. (566mm), the total weight of a fully equipped system is approximately 29 lbs (13.2kg).

Chassis

2.02 The SX-20 chassis (Fig. 2-1) holds the system power supply, the cooling fan, the console connector card and the equipment backplane. The equipment cards plug into the backplane and are held in position by card retainers. The chassis is completely enclosed by the lockable equipment case.

© MITEL Corporation 1979

* Trademark of MITEL Corporation

TABLE 1-1
SX-20 DOCUMENTATION

Number	Title
MITL9102-98-100	General Description
MITL9102-98-105	Features and Services Description
MITL9102-98-150	Physical Description and Ordering Information
MITL9102-98-180	Engineering Information
MITL9102-98-200	Shipping, Receiving and Installation Information
MITL9102-98-205	Installation Forms
MITL9102-98-210	System Programming
MITL9102-98-215	Installation Test Procedures
MITL9102-98-320	Station Test Procedures
MITL9102-98-350	Trouble Shooting Procedures
MITL9102-98-500	General Maintenance Information

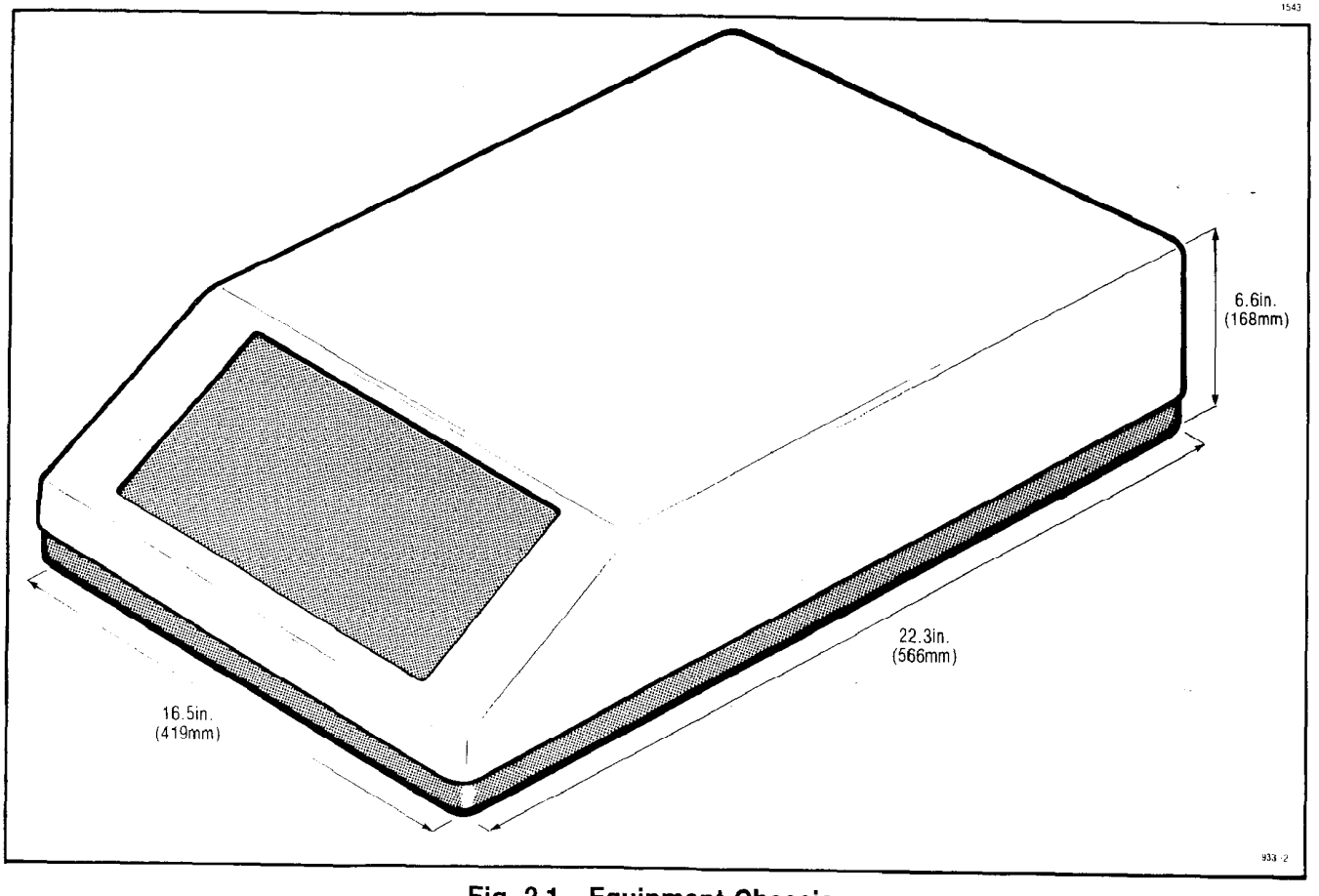

Fig. 2-1 Equipment Chassis

Printed Circuit Cards

2.03 All printed circuit cards employed in the system are identical in construction and consist of a fibreglass board with printed circuit patterns on both of its faces. Located on the front edge of the circuit boards is an extractor clip which allows the cards to be easily removed from the equipment chassis. Table 2-1 lists the card types, their dimensions and weights.

TABLE 2-1
CARD TYPES

Card Type	Dimensions	Weight
CPU Card	10.2in. × 16in. (259mm × 406mm)	2 lbs. (.9kg)
Miscellaneous Card	10.2in. × 16in. (259mm × 406mm)	1.5 lbs. (.675kg)
Line Card	8in. × 10.7in. (203mm × 272mm)	1.2 lbs. (.54kg)
Trunk Module	6in. × 4.38in. (152mm × 11mm)	.37 lbs. (.17kg)
Trunk Expander Board	8in. × 10.7in. (203mm × 272mm)	1.0 lbs. (.22kg)

1489

Primary Power Source

2.04 The primary power supply for the system is mounted at the rear of the equipment chassis and provides all system power from a 90-125Vac, 47-63Hz, input with a maximum current drain of 3A (230Vac operation optional).

Cooling Fan

2.05 A quiet, low speed cooling fan is mounted at the rear of the cabinet. The fan draws cooling air through a filter mounted at the base of the cabinet and passes it over the circuit boards. The cooling air exits through vents in the side of the cover. A temperature sensor protects the circuit cards in the event of a fan failure or cooling air obstruction, by automatically disconnecting the power feed.

Attendant Console

2.06 The optional attendant console used with the SX-20 may be any compatible six or ten button key set terminated in a 50 contact male plug (see Table 6-1 for wiring detail). The console call status display, located in the equipment cabinet, shows the active status of each line and trunk via a busy lamp field. The time, called number and calling number are shown on an eight digit numerical display mounted on the miscellaneous card.

Remote Call Status Display

2.07 The optional Remote Call Status Display shows the same call information as the standard display, but allows the console to be located up the 650 feet (200m) from the equipment cabinet. The overall dimensions of the display unit are shown in Fig. 2-2.

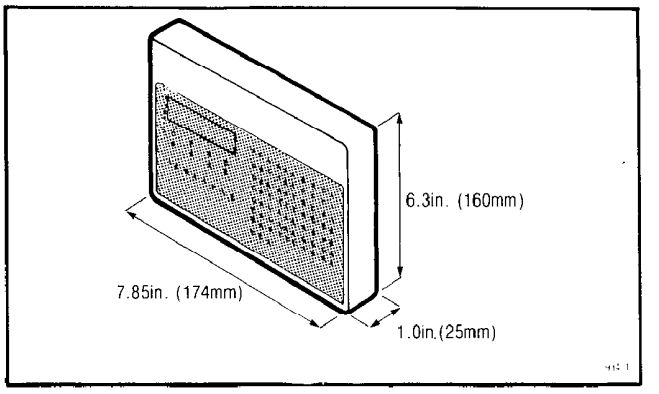

Fig. 2-2 SX-20 Remote Display

Power Fail Transfer

2.08 The power fail transfer relays provided can connect two Central Office Trunks to selected station lines. These relays operate under either of the following conditions:

- commercial power failure
- excess temperature caused by fan failure or cooling air obstruction

(a) **Incoming Calls.** After a power fail transfer has occurred, ringing of extensions for incoming calls is applied directly to the selected extension line from the Central Office (CO).

(b) **Outgoing Calls.** To place an outgoing call through a ground start CO trunk, with the system in the power fail transfer mode, the extension originating the call must be equipped with a ground key. When the ground key is momentarily pressed, a ground is applied to the Ring side of the line, energizing the CO equipment. One side of the ground key must be connected to a ground and the other to the Ring conductor of the station line. Call origination over loop start trunks does not require the use of a ground start key.

Power Fail Transfer Reset

2.09 The system may be returned to normal operation from power fail transfer in one of two ways.

(a) **Reset From High Temperature.** If a high temperature condition is detected, the system switches off the -24 volt supply and enters the power fail transfer mode. When the temperature returns to within the accepted operating limits the system automatically returns to normal operation.

(b) **Reset From Commercial Power Failure.** The system will automatically return to normal operation when commercial power is restored.

Test Line

2.10 The Test Line is assigned to equipment number one. The station connected to this line can be used (dependant on the CPU card switch settings) as a normal extension, the attendant console, or perform any of the following tasks —

- programming/review the user data

All attendant functions including

- examine/delete alarm indicators
- busy out/restore trunks
- access busied out/free trunks for testing
- place/remove system from night service
- set Time-of-Day (12/24 Hr. Clock)
- lamp test
- cancel all alarms and busy outs

3. SHIPPING AND RECEIVING

Introduction

3.01 The SX-20 is shipped in a single carton (Fig. 3-1) containing the fully equipped equipment cabinet. If a large number of systems are to be shipped to one location, ten SX-20 shipping cartons are packaged on a single shipping pallet.

System Packaging

3.02 The equipment cabinet is shipped with all printed circuit cards in position. The cabinet is enclosed in a polyethylene sheet and held in position within the shipping container by two preformed shock absorbant supports as shown in Fig. 3-1. The system documentation and mounting template are packaged in the same container as the equipment cabinet. The shipping container consists of a completely enclosed tri-wall carton supported along two sides by wooden frames for maximum rigidity. During transportation the carton is held closed by two nylon shipping straps. The total weight of a complete system including packaging is approximately 42lbs (18.5kg).

Printed Circuit Card Packaging

3.03 All printed circuit cards, other than those shipped in the system, are packaged individually or in sets as shown in Fig. 3-2 and Fig. 3-3.

4. DELIVERY CHECK

General

4.01 On arrival at the installation site all items must be checked against the order form and packaging slip. Any discrepancies must be reported immediately.

Unpacking and Handling

4.02 The procedure to be used when unpacking and positioning the SX-20 equipment is detailed in MAP 200-001 and MAP200-002.

Circuit Cards

4.03 Circuit cards shipped separately from the equipment cabinet, should not be unpacked before they are required for use. When required, the cards should be transported to the equipment location packaged in their original containers.

Inspection

4.04 After unpacking the equipment cabinet a visual inspection should be performed to ensure that —

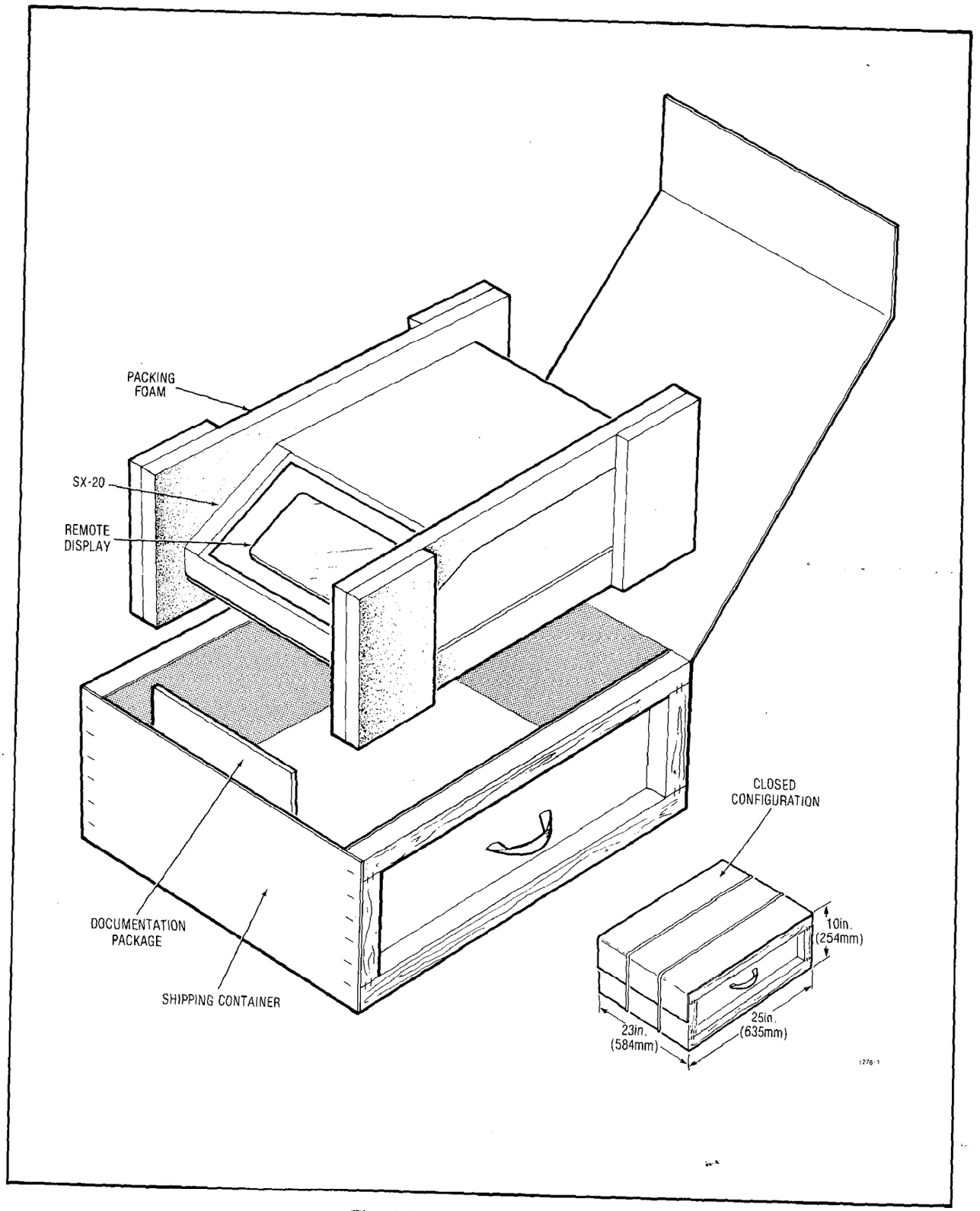

Fig. 3-1 System Packaging

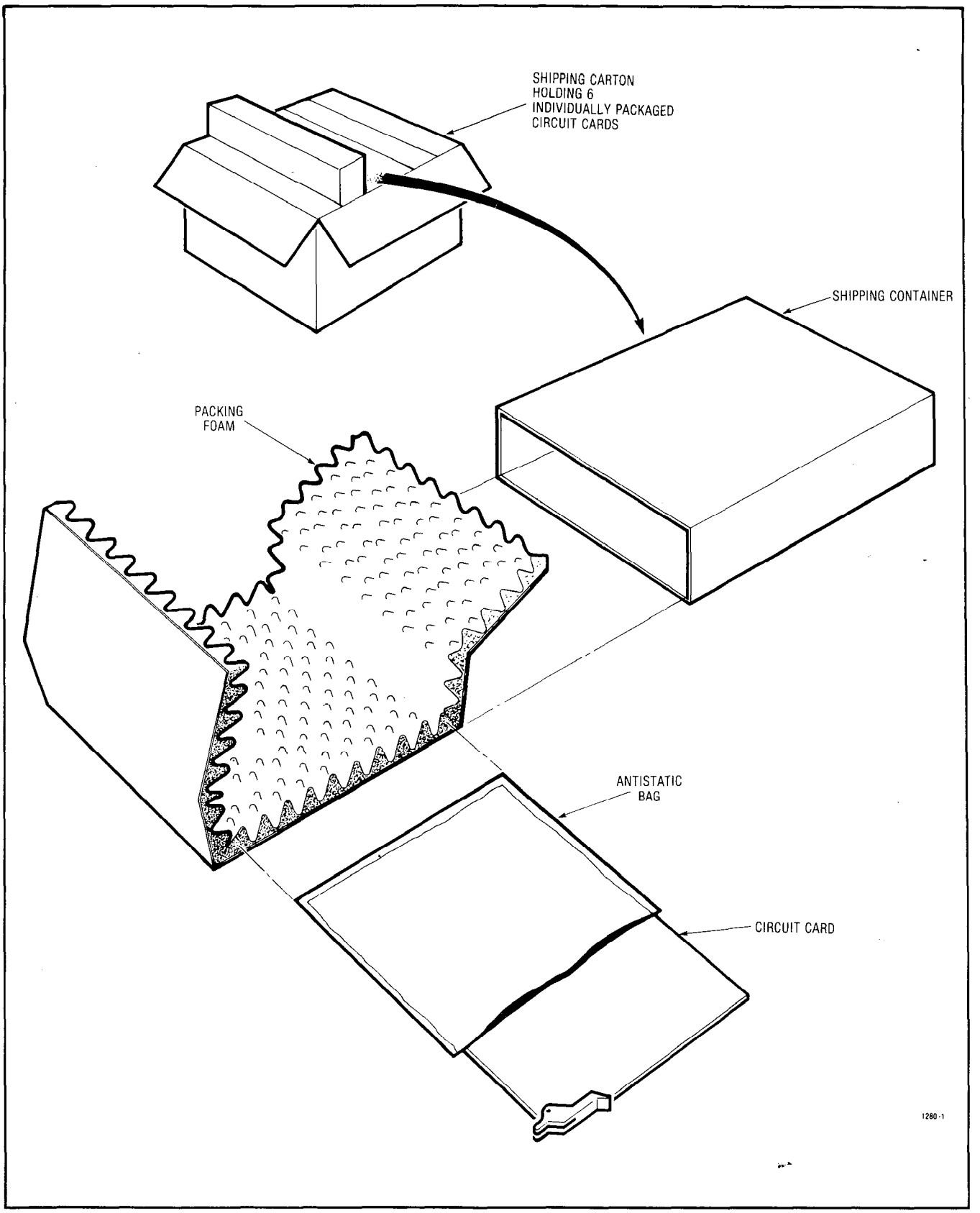

Fig. 3-2 Printed Circuit Card Packaging

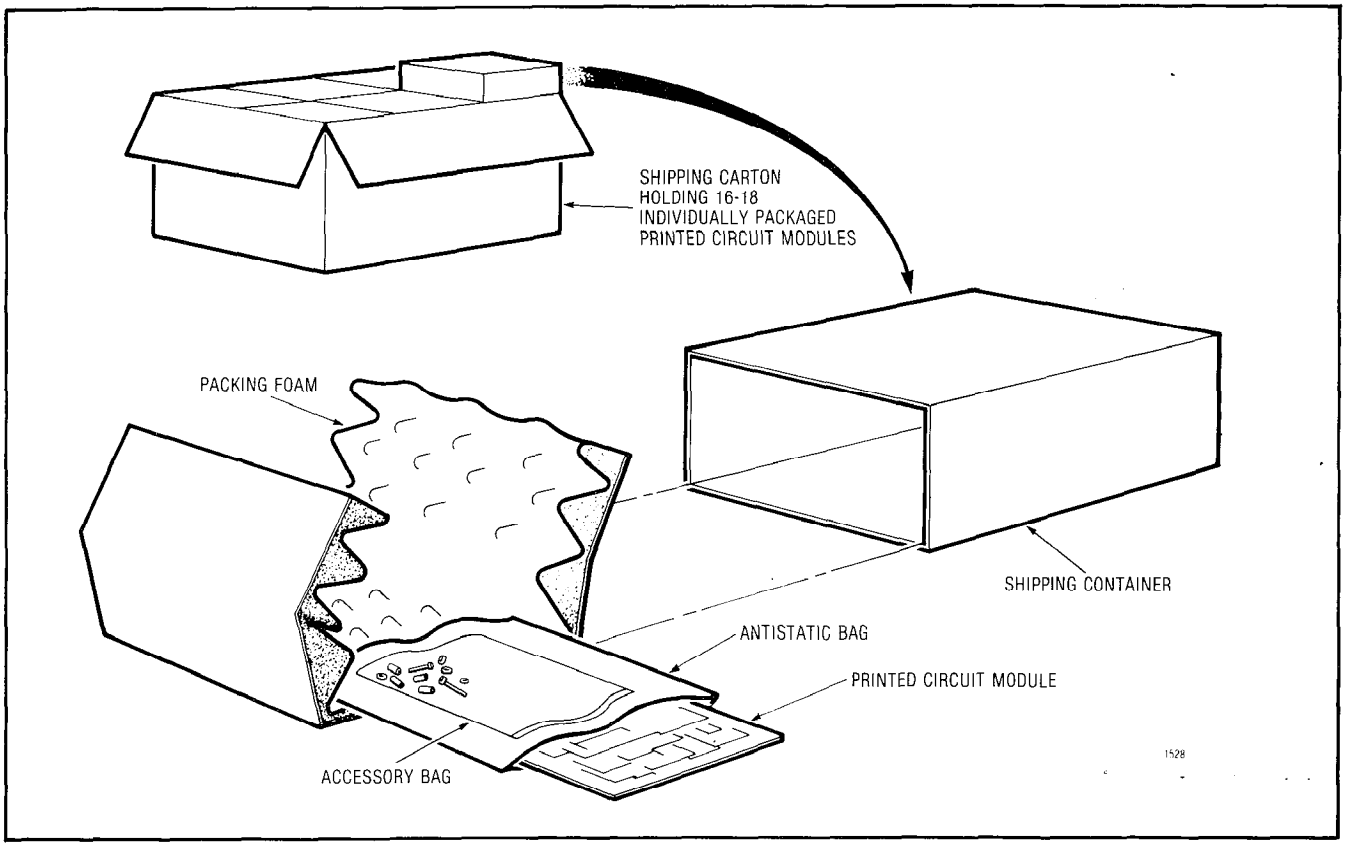

Fig. 3-3 Printed Circuit Module Packaging

(a) The cabinet has not been dented or scratched during shipping.

(b) All cards are seated firmly in their connectors.

(c) All components mounted on the equipment chassis are secure.

(d) All connections to the power supply are tight.

Printed Circuit Card Inspection

CAUTION: Handle circuit cards by their edges only. Handling the board faces or components may cause damage.

4.05 If printed circuit cards are shipped separately from the equipment cabinet, inspect each circuit card to ensure that:

(a) The fiberboard is not cracked.

(b) No loose leads, or damaged or loose components are apparent.

Circuit cards shipped in the equipment cabinet do not require additional inspection unless equipment chassis damage has been found.

Defective Items

4.06 If any defective item is found it should be tagged and returned to the supplier in accordance with accepted procedures.

Repacking For Reshipment

4.07 When the SX-20 equipment is shipped from one location to another, all items must be packaged to prevent damage. Fig. 3-1, 3-2 and 3-3 show how the equipment was originally packaged. This method of packaging should be followed as closely as possible.

4.08 If the original packaging material is no longer available, the returned parts should be wrapped in several layers of air-cushion type wrap, placed in a suitable container, and surrounded with paper to minimize movement of all items.

5. INSTALLATION REQUIREMENTS

Environmental Requirements

5.01 The SX-20 equipment cabinet may be installed in any location which fulfills the requirements of 5.02 and 5.03, and is within the following temperature and humidity limits:

- Temperature 0°- 40°C (32° - 104°F)
- Relative Humidity 10-90%

Space Requirements

5.02 The minimum space required for installation of the SX-20 is shown in Fig. 5-1.

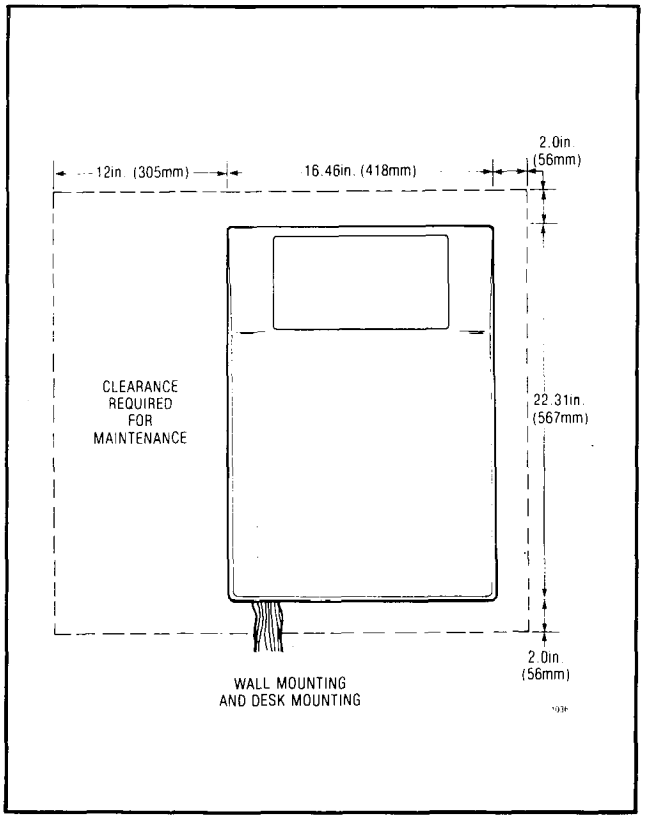

Fig. 5-1 Minimum Space Requirements

Equipment Cabinet Location

5.03 The following requirements must be met when selecting a location for the SX-20 equipment cabinet.

The location MUST BE:

- dry and clean
- well ventilated
- well lit
- easily accessible

The location MUST NOT BE:

- near a sprinkler system, sweating pipes, steam pipes or steam vents
- in areas with extreme heat or cold
- in areas where corrosive fumes or exhaust from machinery is present
- in passageways used for moving equipment
- next to a reproducing or copying machine. A minimum clearance of 10 feet (3m) must be provided and the room should be ventilated by an exhaust fan if the reproducing machine is not equipped with a filtering system

Power Supply Requirements

5.04 The customer must provide a single phase power receptacle, which should adhere to the following recommendations:

- 115V, 60Hz, fused, and capable of delivering 3A (230V, 50Hz delivering 2A)
- the power receptacle should be wired and fused independently from all other receptacles
- a warning tag should be attached to circuit-breaker-type fuses to prevent unauthorized manual operation

- the power receptacle must not be controlled by a switch
- the power receptacle should be a 3-wire type, with the third wire grounded to the ground of the electrical system
- the receptacle should be easily accessible for the removal of the plug for maintenance
- the receptacle location should be selected to prevent accidental removal of the power cord
- the power cord between the cabinet and the receptacle should not present a hazard to the subscriber
- a warning tag should be attached to the plug end of the power cord to prevent accidental removal of the cord by the subscriber

Equipment Ground

5.05 The following is a description of the required PBX equipment grounding practice:

(a) All circuit commons within the cabinet shall derive ground from a single ground concentration point within the cabinet. The cabinet ground concentration point shall derive ground from a single ground concentration point serving all peripherals colocated with the system.

(b) The system cabinet and all associated ducting hardware along with all colocated peripherals shall not be exposed to any ground source other than the system single point ground described in (a) above.

(c) AC service wires bringing ac power to the cabinet shall not share an enclosure or raceway with any other system grounds, dc power distribution wires, or signaling wires. All non-connectorized ac power terminations shall be enclosed by raceways and termination boxes whether these enclosures appear outside or within the system cabinet. This is to ensure that ac service wires cannot fault to circuitry within the system cabinet or associated ducting hardware.

(d) All system hardware shall be provided with an ac fault return path to the system single point ground, which in turn shall be provided with a reliable path to the equipment grounding conductor (i.e. green wire ground or safety ground). The path from system equipment to system single point ground need not be a direct dedicated path, but can be any reliable path to other system hardware which receives the above grounding path.

(e) See Appendix 3 for FCC Interconnect Requirements.

(f) All sources of external ground (i.e. system signaling ground to the approved ground source, etc.) shall connect only to the system single point ground. The intent of providing for a system single point ground is to minimize ground loops and prevent lightning from finding a path through system components.

6. CABLING AND CROSS-CONNECTIONS

General

6.01 This part details the cabling and cross-connections required when installing the SX-20 Communications System.

Telephone Set and Trunk Cabling

6.02 Telephone set and trunk cabling terminates on the building cross-connect terminal in the normal manner. The station loop limit is 600ohms, including station set and the Console loop limit is 600ohms Tip to Ring, including console set. Central Office trunk loop limit is 1600ohms.

Cable Terminations

6.03 All interconnecting cables must be terminated in accordance with Fig. 6-1 and Table 6-1 (Interconnect Cable - Console), Table 6-2 (Interconnect Cable - Trunks and Miscellaneous), and Table 6-3 (Interconnect Cable - Extensions).

Cross-Connections

6.04 Jumpers should be run using Z type 24AWG cross-connecting cables.

TABLE 6-1
INTERCONNECTING CABLE - CONSOLE CONNECTOR (J1)

Pin	Pair Color	Lead Designation
26	W-BL	Tip, Button 1
1	BL-W	Ring, Button 1
27	W-O	A, Button 1
2	O-W	A1 Ground Return
28	W-G	Lamp Return
3	G-W	Lamp, Button 1
29	W-BR	Tip, Button 2
4	BR-W	Ring, Button 2
30	W-S	A, Button 2
5	S-W	A, Button 9
31	R-BL	Lamp Return
6	BL-R	Lamp, Button 2
32	R-O	Tip, Button 3
7	O-R	Ring, Button 3
33	R-G	A, Button 3
8	G-R	A, Button 8
34	R-BR	Lamp Return
9	BR-R	Lamp, Button 3
35	R-S	Tip, Button 4
10	S-R	Ring, Button 4
36	BK-BL	A, Button 4
11	BL-BK	A, Button 7
37	BK-O	Lamp Return
12	O-BK	Lamp, Button 4

Pin	Pair Color	Lead Designation
38	BK-G	Tip, Button 5
13	G-BK	Ring, Button 5
39	BK-BR	A, Button 5
14	BR-BK	A, Button 6
40	BK-S	Lamp Return
15	S-BK	Lamp, Button 5
41	Y-BL	Tip, Button 6
16	BL-Y	Ring, Button 6
42	Y-O	NC
17	O-Y	NC
43	Y-G	Lamp Return
18	G-Y	Lamp, Button 6
44	Y-BR	Tip, Button 7
19	BR-Y	Ring, Button 7
45	Y-S	Ringing Return
20	S-Y	Ringing
46	V-BL	Lamp Return
21	BL-V	Lamp, Button 7
47	V-O	Tip, Button 8
22	O-V	Ring, Button 8
48	V-G	Lamp Return
23	G-V	Lamp, Button 9
49	V-BR	Lamp Return
24	BR-V	Lamp, Button 8
50	V-S	Tip, Button 9
25	S-V	Ring, Button 9

1540

TABLE 6-2
INTERCONNECTING CABLE - TRUNKS AND MISCELLANEOUS (CONNECTORS P3, P8 and J4)

Pin	Pair Color	Connector P3 (Trunks)	Connector P8 (Note 1) (Optional Trunks)	Connector J4 (Miscellaneous)
26	W-BL	Trunk 1 Tip	Trunk 9 Tip	Station Y Ring
1	BL-W	Trunk 1 Ring	Trunk 9 Ring	Station Y Tip
27	W-O	Trunk 2 Tip	Trunk 10 Tip	Line Circuit Y Tip
2	O-W	Trunk 2 Ring	Trunk 10 Ring	Line Circuit Y Ring
28	W-G	Trunk 3 Tip	Trunk 11 Tip	GND (see Fig. 6-4)
3	G-W	Trunk 3 Ring	Trunk 11 Ring	RESERVED
29	W-BR	Trunk 4 Tip	Trunk 12 Tip	NOT USED
4	BR-W	Trunk 4 Ring	Trunk 12 Ring	NOT USED
30	W-S	Trunk 5 Tip	NOT USED	PA-A } Paging Circuit
5	S-W	Trunk 5 Ring		PA-B } (see Fig. 6-3)

Power Fail Transfer 2 (Fig. 6-2)

Note 1: If the 12 trunk version is used, the upper line card is replaced with a trunk expander board.

TABLE 6-2 (CONT'D)
INTERCONNECTING CABLE - TRUNKS AND MISCELLANEOUS (CONNECTORS P3, P8 AND J4)

Pin	Pair Color	Connector P3 (Trunks)	Connector P8 (Note 1) (Optional Trunks)	Connector J4 (Miscellaneous)
31	R-BL	Trunk 6 Tip	NOT USED	ALARM A } Alarm output
6	BL-R	Trunk 6 Ring		ALARM B } (see Fig. 6-5)
32	R-O	Trunk 7 Tip		NOT USED
7	O-R	Trunk 7 Ring		NOT USED
33	R-G	Trunk 8 Tip		PA1 Paging Circuit
8	G-R	Trunk 8 Ring		PA2 (see Fig. 6-3)
34	R-BR	NOT USED	NOT USED	GND
9	BR-R			GND
35	R-S			NIGHT BELL A (see
10	S-R			NIGHT BELL B Fig. 6-4)
36	BK-BL			NOT USED
11	BL-BK			NOT USED
37	BK-O			RESERVED
12	O-BK			RESERVED
38	BK-G	NOT USED	NOT USED	RESERVED
13	G-BK			RESERVED
39	BK-BR			NOT USED
14	BR-BK			NOT USED
40	BK-S			NOT USED
15	S-BK			NOT USED
41	Y-BL			90V Ringing (see Fig. 6-4)
16	BL-Y			-24V (see Fig. 6-5)
42	Y-O	NOT USED	NOT USED	NOT USED
17	O-Y			NOT USED
43	Y-G			NOT USED
18	G-Y			NOT USED
44	Y-BR			NOT USED
19	BR-Y			NOT USED
45	Y-S			GND (see Fig. 6-5)
20	S-Y			RESERVED
46	V-BL	NOT USED	NOT USED	GND
21	BL-V			RESERVED
47	V-O	Trunk 5 XT		NOT USED
22	O-V	Trunk 1 XT	Trunk 9 XT	NOT USED
48	V-G	Trunk 6 XT		NOT USED
23	G-V	Trunk 2 XT	Trunk 10 XT	NOT USED
49	V-BR	Trunk 7 XT		Station X Tip } Power Fail Transfer 1 (Fig. 6-2)
24	BR-V	Trunk 3 XT	Trunk 11 XT	Station X Ring } Power Fail Transfer 1 (Fig. 6-2)
50	V-S	Trunk 8 XT		Line Circuit X Tip } Power Fail Transfer 1 (Fig. 6-2)
25	S-V	Trunk 4 XT	Trunk 12 XT	Line Circuit X Ring } Power Fail Transfer 1 (Fig. 6-2)

1541

Note 1: If the 12 trunk version is used, the upper line card is replaced with a trunk expander board.

TABLE 6-3
INTERCONNECTING CABLES - EXTENSIONS (CONNECTORS J6, J7 AND J8)

Pin	Pair Color	Connector J6	Connector J7	Connector J8 (Note 1)
26	W-BL	Tip 1 See	Tip25	Tip49
1	BL-W	Ring 1 Note 2	Ring25	Ring49
27	W-O	Tip 2	Tip26	Tip50
2	O-W	Ring 2	Ring26	Ring50
28	W-G	Tip 3	Tip27	Tip51
3	G-W	Ring 3	Ring27	Ring51
29	W-BR	Tip 4	Tip28	Tip52
4	BR-W	Ring 4	Ring28	Ring52
30	W-S	Tip 5	Tip29	Tip53
5	S-W	Ring 5	Ring29	Ring53
31	R-BL	Tip 6	Tip30	Tip54
6	BL-R	Ring 6	Ring30	Ring54
32	R-O	Tip 7	Tip31	Tip55
7	O-R	Ring 7	Ring31	Ring55
33	R-G	Tip 8	Tip32	Tip56
8	G-R	Ring 8	Ring32	Ring56
34	R-BR	Tip 9	Tip33	Tip57
9	BR-R	Ring 9	Ring33	Ring57
35	R-S	Tip10	Tip34	Tip58
10	S-R	Ring10	Ring34	Ring58
36	BK-BL	Tip11	Tip35	Tip59
11	BL-BK	Ring11	Ring35	Ring59
37	BK-O	Tip12	Tip36	Tip60
12	O-BK	Ring12	Ring36	Ring60
38	BK-G	Tip13	Tip37	Tip61
13	G-BK	Ring13	Ring37	Ring61
39	BK-BR	Tip14	Tip38	Tip62
14	BR-BK	Ring14	Ring38	Ring62
40	BK-S	Tip15	Tip39	Tip63
15	S-BK	Ring15	Ring39	Ring63
41	Y-BL	Tip16	Tip40	Tip64
16	BL-Y	Ring16	Ring40	Ring64
42	Y-O	Tip17	Tip41	Tip65
17	O-Y	Ring17	Ring41	Ring65
43	Y-G	Tip18	Tip42	Tip66
18	G-Y	Ring18	Ring42	Ring66
44	Y-BR	Tip19	Tip43	Tip67
19	BR-Y	Ring19	Ring43	Ring67
45	Y-S	Tip20	Tip44	Tip68
20	S-Y	Ring20	Ring44	Ring68
46	V-BL	Tip21	Tip45	Tip69
21	BI-V	Ring21	Ring45	Ring69
47	V-O	Tip22	Tip46	Tip70

TABLE 6-3 (CONT'D)
INTERCONNECTING CABLES - EXTENSIONS (J6, J7 AND J8)

	Pair Color	Connector J6	Connector J7	Connector J8 (Note 1)
22	O-V	Ring22	Ring46	Ring70
48	V-G	Tip23	Tip47	Tip71
23	G-V	Ring23	Ring47	Ring71
49	V-BR	Tip24	Tip48	Tip72
24	BR-V	Ring24	Ring48	Ring72
50	V-S	NOT	NOT	NOT
25	S-V	USED	USED	USED

Note: 1. If the 12 trunk version is used, the upper line card is replaced with a trunk expander board. See Table 6-2 for wiring details.
1542
2. Test line - This may be used as a normal extension dependant on the CPU card switch settings. See paragraph 2.10 and Map 200-003.

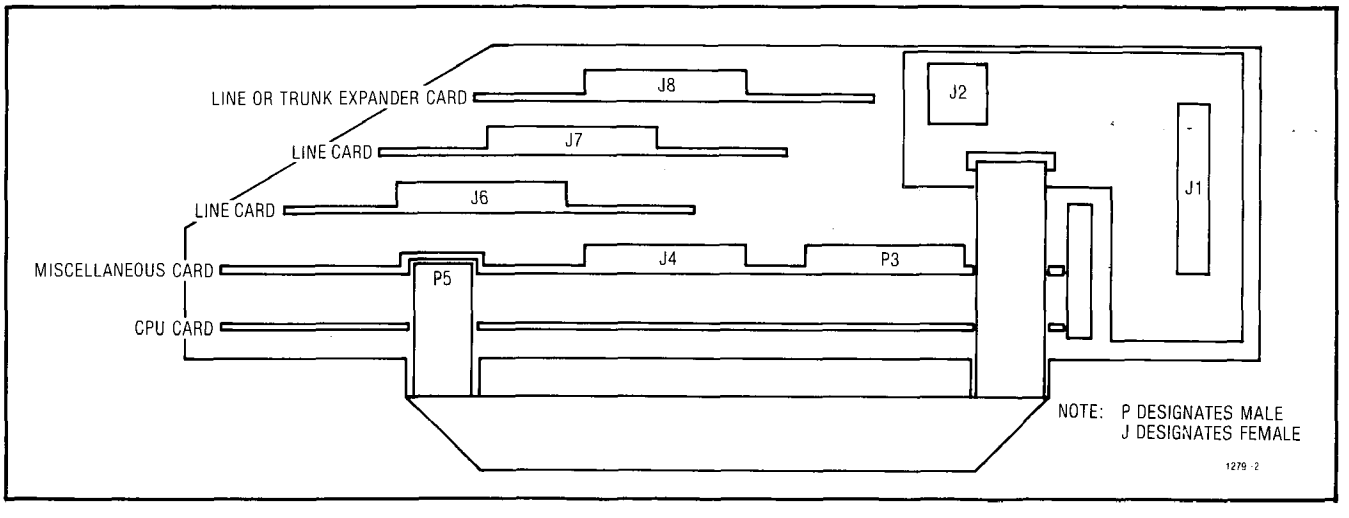

Fig. 6-1 Plug Locations

6.05 Connection between the equipment cabinet, stations, trunks, and console should be made using 26AWG connector ended 25 pair cables in accordance with Tables 6-1, 6-2, and 6-3.

6.06 Power fail transfer cabling connections between the SX-20, and the cross connect field are shown in Fig. 6-2, the Paging connections in Fig. 6-3 and the Night Bell connections in Fig. 6-4.

6.07 If an alarm condition is detected the console RELEASE button flashes and AL is shown with the time on the system display. In addition to these system indicators, a contact closure is provided to allow an external alarm indicator to be connected if desired. The cabling details for the external alarm indicator are shown on Fig. 6-5 and in Table 6-2.

FCC Cross Connect Frame Recommendations

6.08 Trunk circuits must be connected to the telephone company interface jack sequentially.The cabling requirements and limits for trunks are as detailed in paragraphs 6.05 and 6.02. All cables connecting trunk circuit pairs must be connectorized.

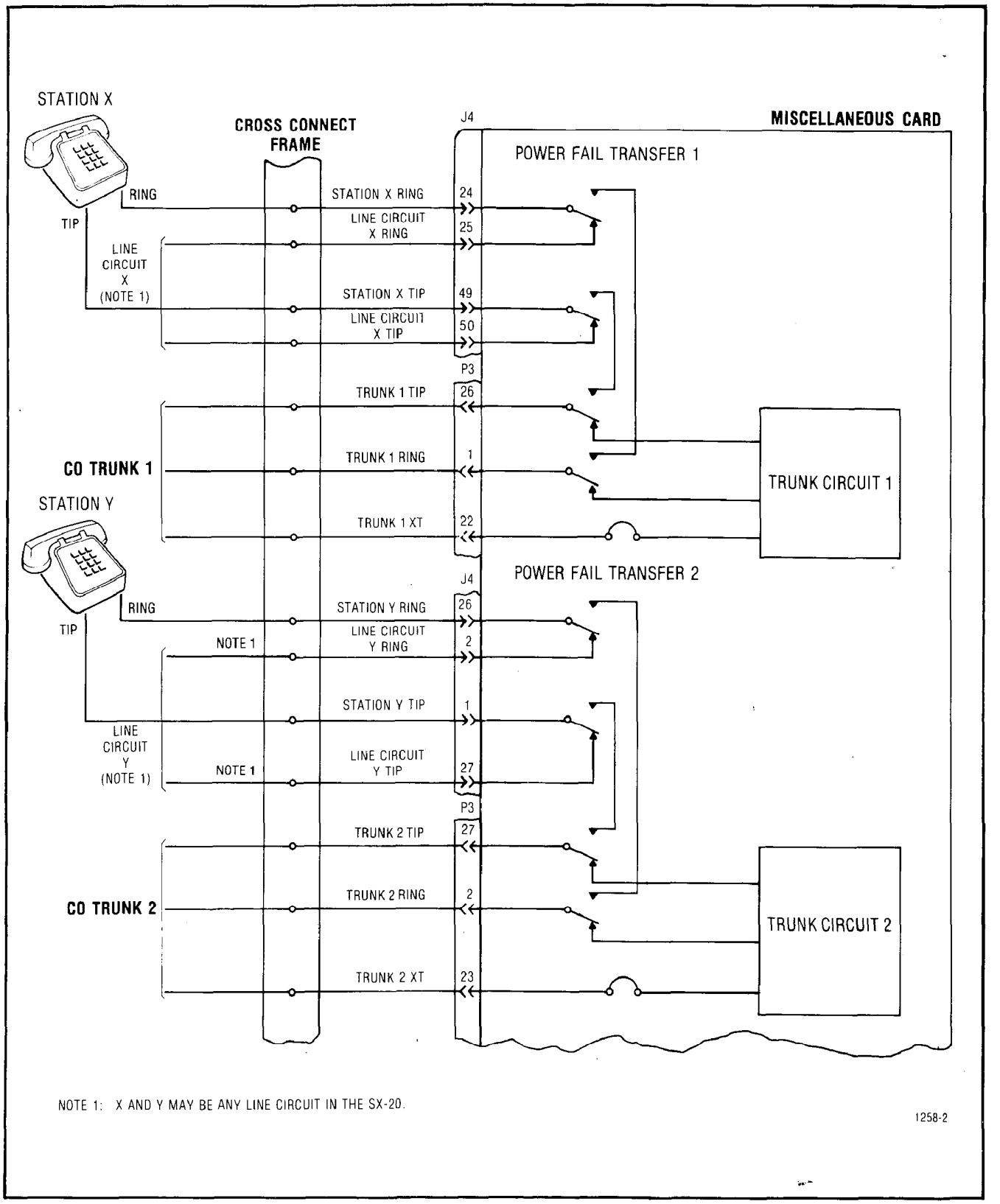

Fig. 6-2 Power Fail Transfer Connections

PAGING OUTPUTS PA1 AND PA2 MAY BE USED TO FEED TWO PAGING ZONES, EACH ZONE WITH ITS OWN VOLUME CONTROL.

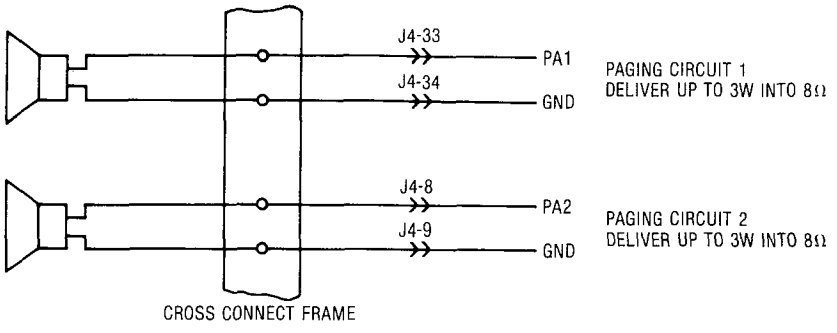

(a) WIRING DIAGRAM FOR TWO PAGING ZONES

PAGING OUTPUTS PA1 AND PA2 ARE IN ANTIPHASE AND MAY BE CONNECTED AS SHOWN IN FIG. 6 -4(B) TO PROVIDE AN OUTPUT OF 6W INTO AN 8 Ω LOAD.

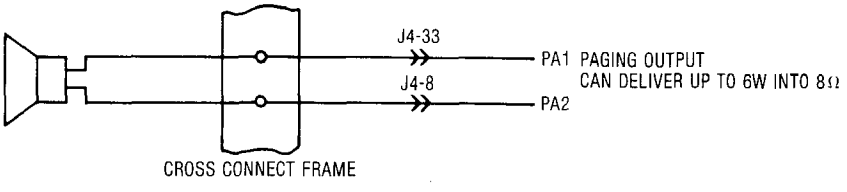

(b) WIRING DIAGRAM FOR HIGH POWER OUTPUT, SINGLE ZONE

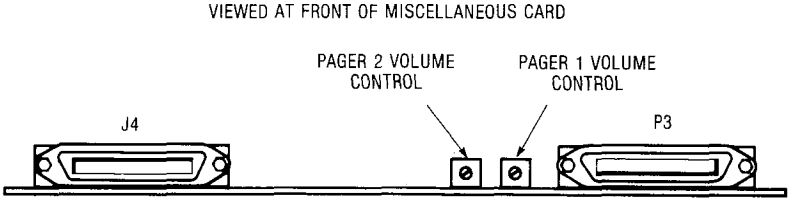

(c) PAGING VOLUME CONTROLS (TURN CLOCKWISE TO DECREASE VOLUME)

WHEN PAGER IS OPERATED A REED RELAY CLOSES, THIS RELAY CLOSURE MAY BE USED TO CONTROL EXTERNAL PAGING EQUIPMENT.

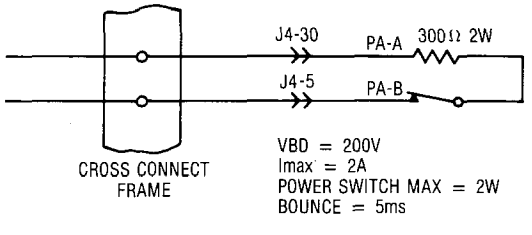

(d) EXTERNAL EQUIPMENT CONTROL

1255-2

Fig. 6-3 Paging Connections

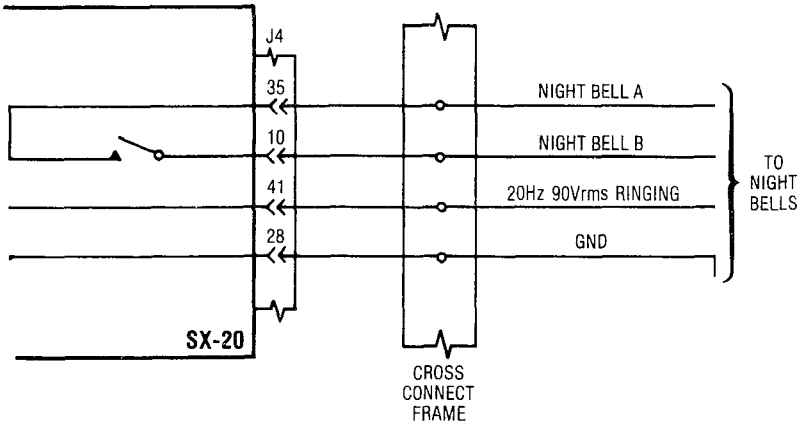

NOTE: THE RELAY IS ELECTRO MECHANICAL WITH THE FOLLOWING SPECIFICATIONS

VBD = 200V
Imax = 2A
POWER SWITCHED = 20W
BOUNCE = 20ms MAXIMUM

EXTERNAL RINGING MAY BE USED IF THE LIMITATIONS IMPOSED BY THE RELAY SPECIFICATIONS ARE ADHERED TO.

1256 -3

Fig. 6-4 Night Bell Connections

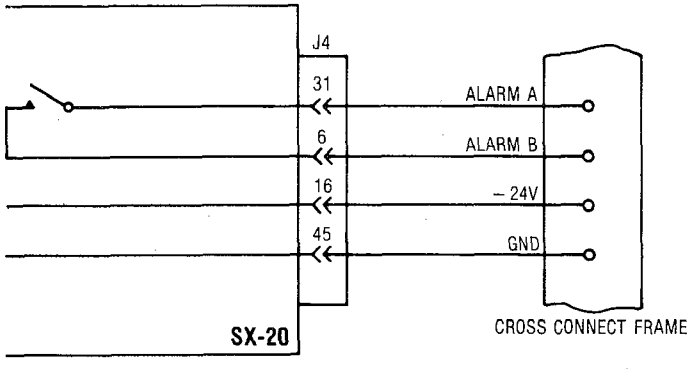

NOTE: IF THE SYSTEM – 24V SUPPLY IS USED TO DRIVE AN EXTERNAL ALARM INDICATOR A 0.5AMP FUSE MUST BE PROVIDED.

1260 -3

Fig. 6-5 Alarm Connections

7. INSTALLATION

General

7.01 The SX-20 system should be installed in accordance with the steps listed in Table 7-1, and as detailed in the following Appendices.

TABLE 7-1
SYSTEM INSTALLATION

Step	Procedure	Section
1	Equipment Unpacking	MITL9102-98-200 MAP200-001
2	Install Equipment Cabinet	MITL9102-98-200 MAP200-002
3	System Installation	MITL9102-98-200 MAP200-003
4	Install Console Button Designations	MITL9102-98-200 MAP200-004
5	Program System	MITL9102-98-210
6	Perform System Tests	MITL9102-98-215

PRINTED IN CANADA

APPENDIX 1
MITEL ACTION PROCEDURES

GENERAL

A1.01 Task oriented functions in this section are implemented using MITEL ACTION PROCEDURES (MAP's).

A1.02 A MAP is a step by step procedure using a flow chart principle, written and illustrated where necessary to a level of detail that allows both experienced and inexperienced personnel to carry out the tasks detailed. A MAP contains three levels of information as follows:

(a) This level contains a SYNOPSIS of the instructions required to complete the procedure.

(b) For experienced personnel, a series of steps (level one) each numbered [n] and annotated with minimal information.

(c) For inexperienced personnel, each step referred to in (a) above is amplified by a connected series of numbered substeps [nA] (level two).

A1.03 A typical example of a MAP is shown in Fig. A1, with levels (b) and (c) detailed.

MAP SYMBOLS

A1.04 There are four basic symbol shapes which may be used in a MAP, and are defined as follows.

A1.05 AND Block: Used to indicate a level one step that must be performed. Consists of a square with the word AND centred in the block.

A1.06 OR Block: Used to indicate a choice of level one steps, one of which must be performed. Consists of a rectangle, with the text centred in the block, and with the word OR appearing between the alternative operations.

A1.07 The rectangle is also used to border instructions which imply that the operative must perform a task outside the scope of the MAP. The text is centred in the rectangle.

A1.08 Decision Block: Used to indicate a decision within the level one steps which must be made. The symbol is based on a hexagon with the top and bottom sides extended. Decision text is centered in the symbol.

A1.09 START/FINISH/Jump To Block: Used to indicate the start and finish of a MAP. Also used to indicate 'jump to' points with the MAP, for example go to [n] or from [n] or return to [n]. The symbol is a rectangle with semi circular ends. Text is centered in the symbol.

THE OPERATORS USE OF MAP'S

Experienced Operator

A1.10 For the experienced operator to complete a task using a MAP, reference to the sequential short form level one steps is usually all that is necessary.

Inexperienced Operator

A1.11 If the operator's experience is such that the level one instructions do not contain sufficient information, the level two substeps should be referred to.

TOOLS, TEST EQUIPMENT AND SPECIAL INSTRUCTIONS

A1.12 All tools, test equipment and special instructions that the operator requires to complete a procedure are stated on the first page of each MAP.

A to Z KELLATRONICS, Inc.

[redacted] Tel: 800.766.3425
email: info@kellatronics.com Fax: 818.773.8899

APPENDIX 2
INSTALLATION PROCEDURES

1. GENERAL

A.01 The following MAP's detail the procedures to be performed to complete the physical installation of an SX-20 Communications System. For programming instructions refer to SX-20 Programming Guide.

CAUTION: ***Caution is necessary, during installation and maintenance of the SX-20 to avoid possible damage to the system electronics by static discharge. A simple means of avoiding the possibility of such damage, is the use of a "Static Protection Wrist Strap" attached to the system Ground Stud, as shown below. If difficulty is experienced in obtaining the wrist strap please contact MITEL Customer Services.***

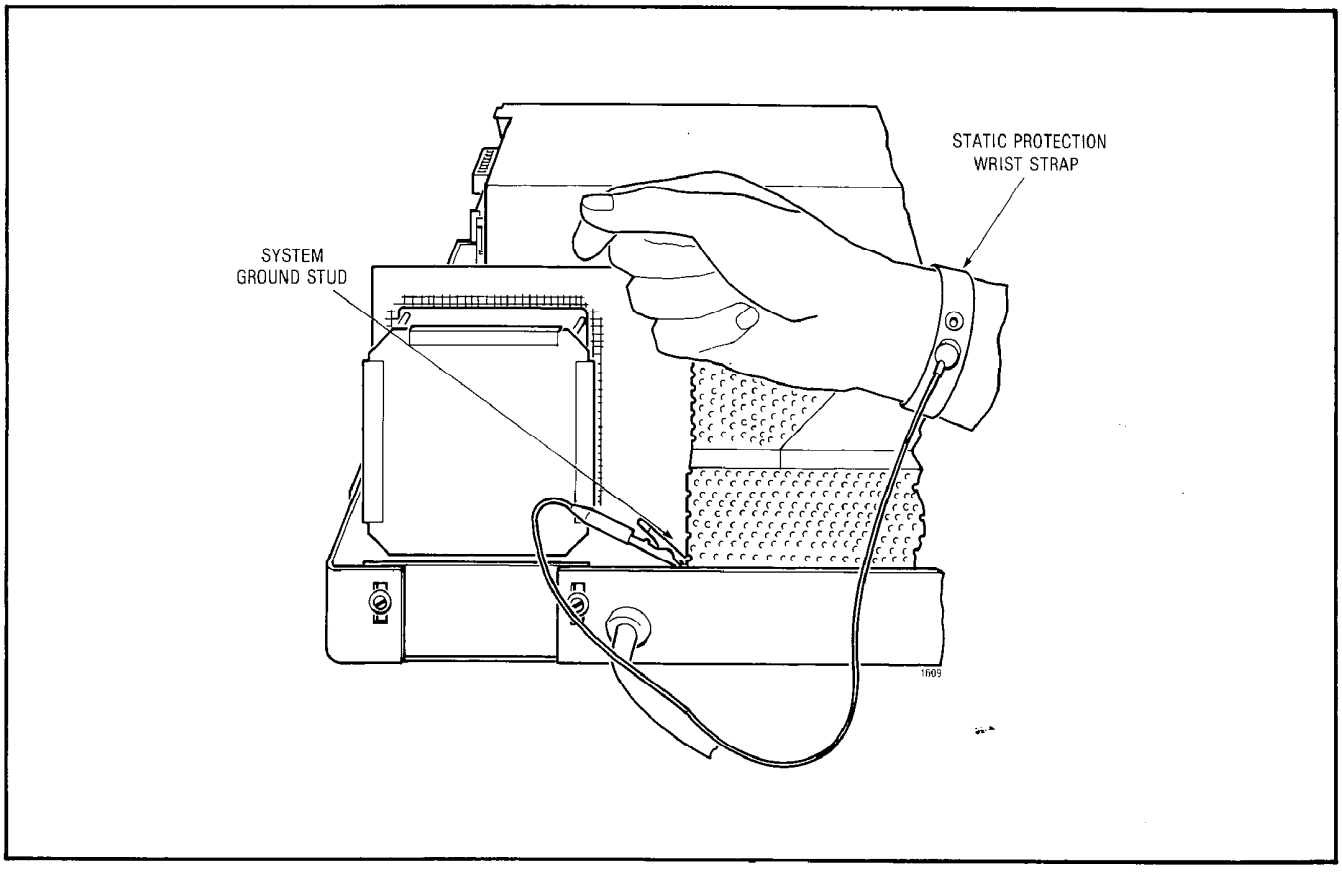

EQUIPMENT UNPACKING
MAP200-001
Issue 2, March 80
Sheet 1 of 2

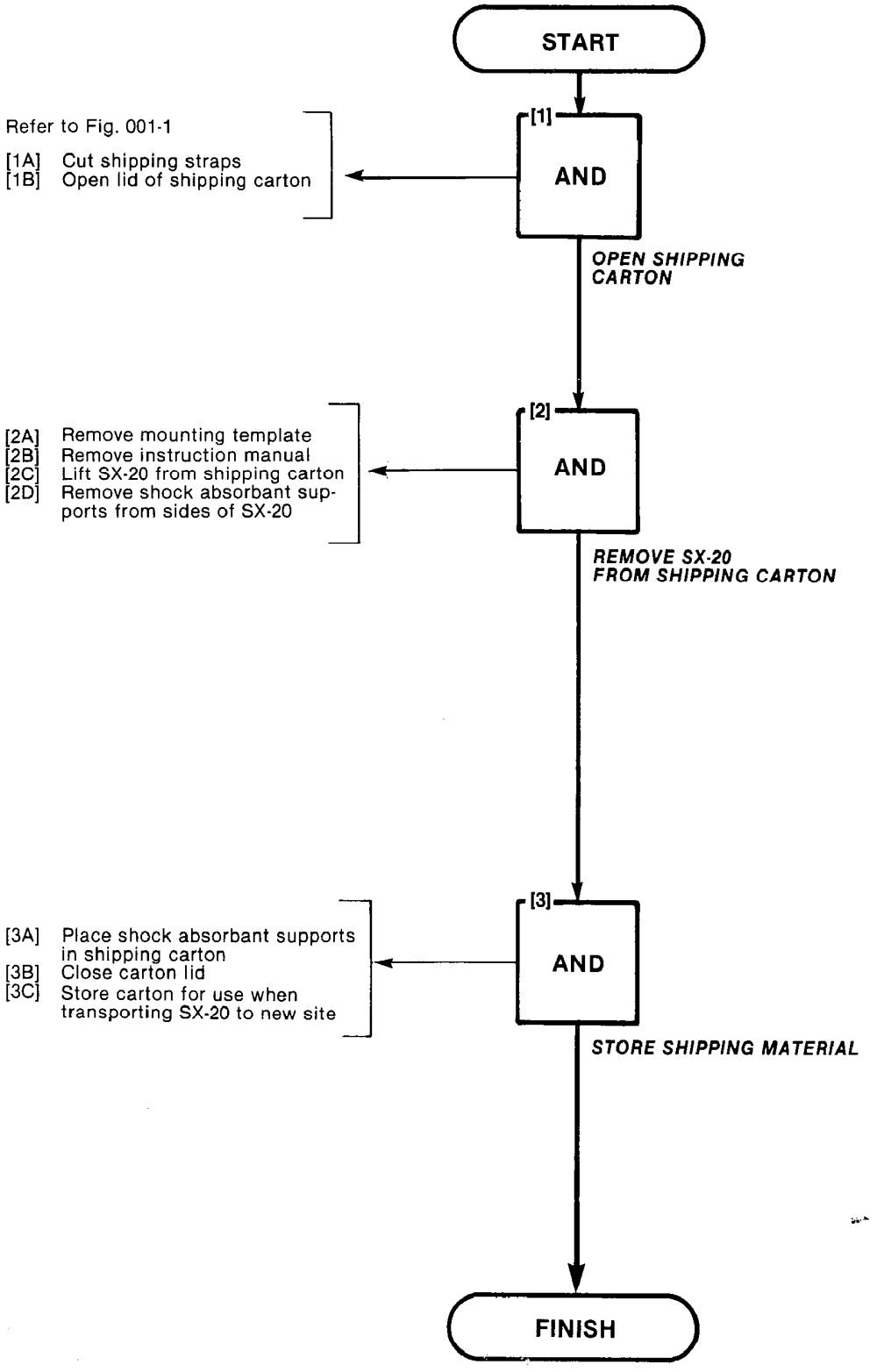

EQUIPMENT UNPACKING
MAP200-001
Issue 2, March 80
Sheet 2 of 2

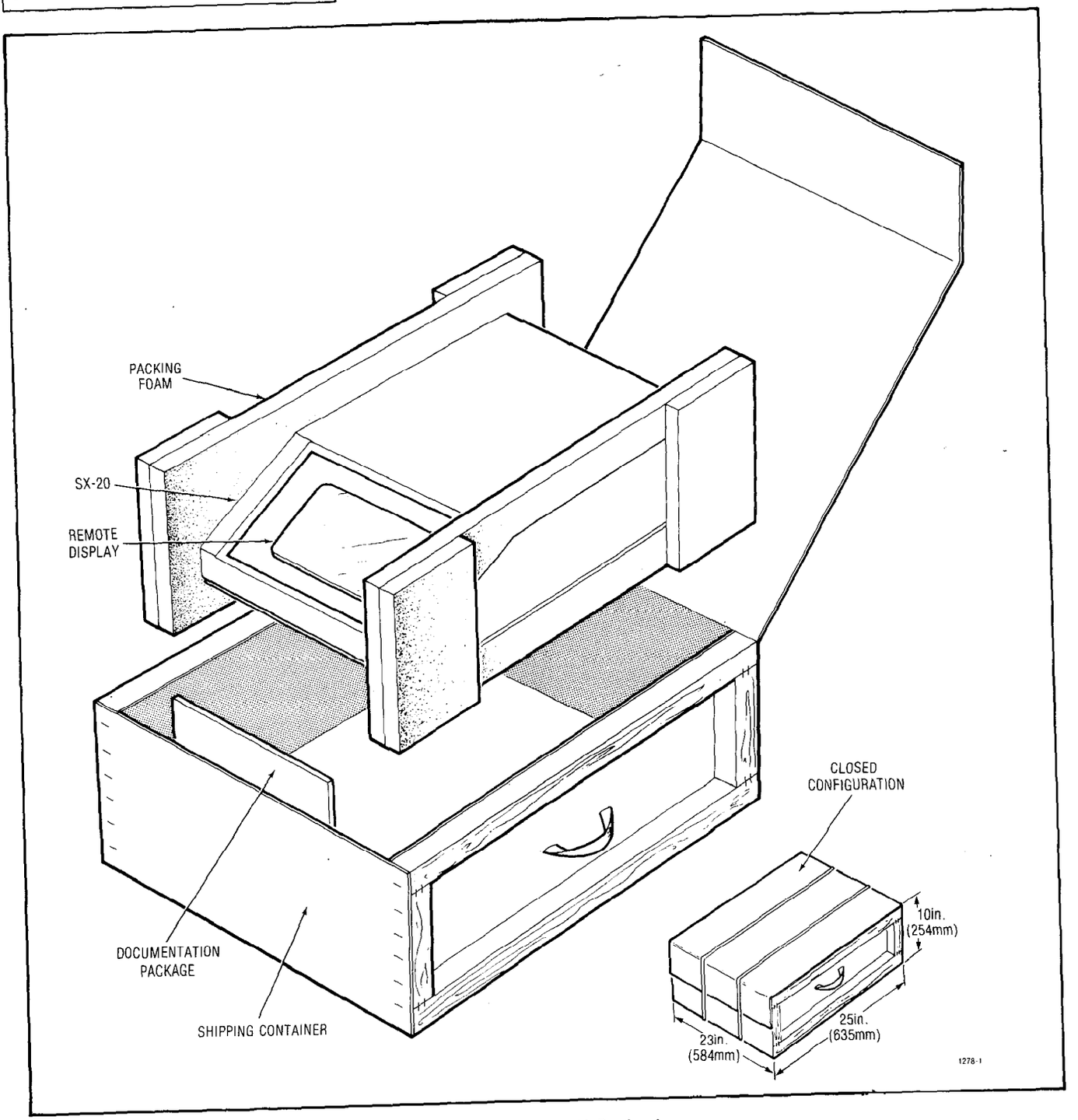

Fig. 001-1 SX-20 Packaging

INSTALL EQUIPMENT CABINET
MAP200-002
Issue 2, March 80
Sheet 1 of 3

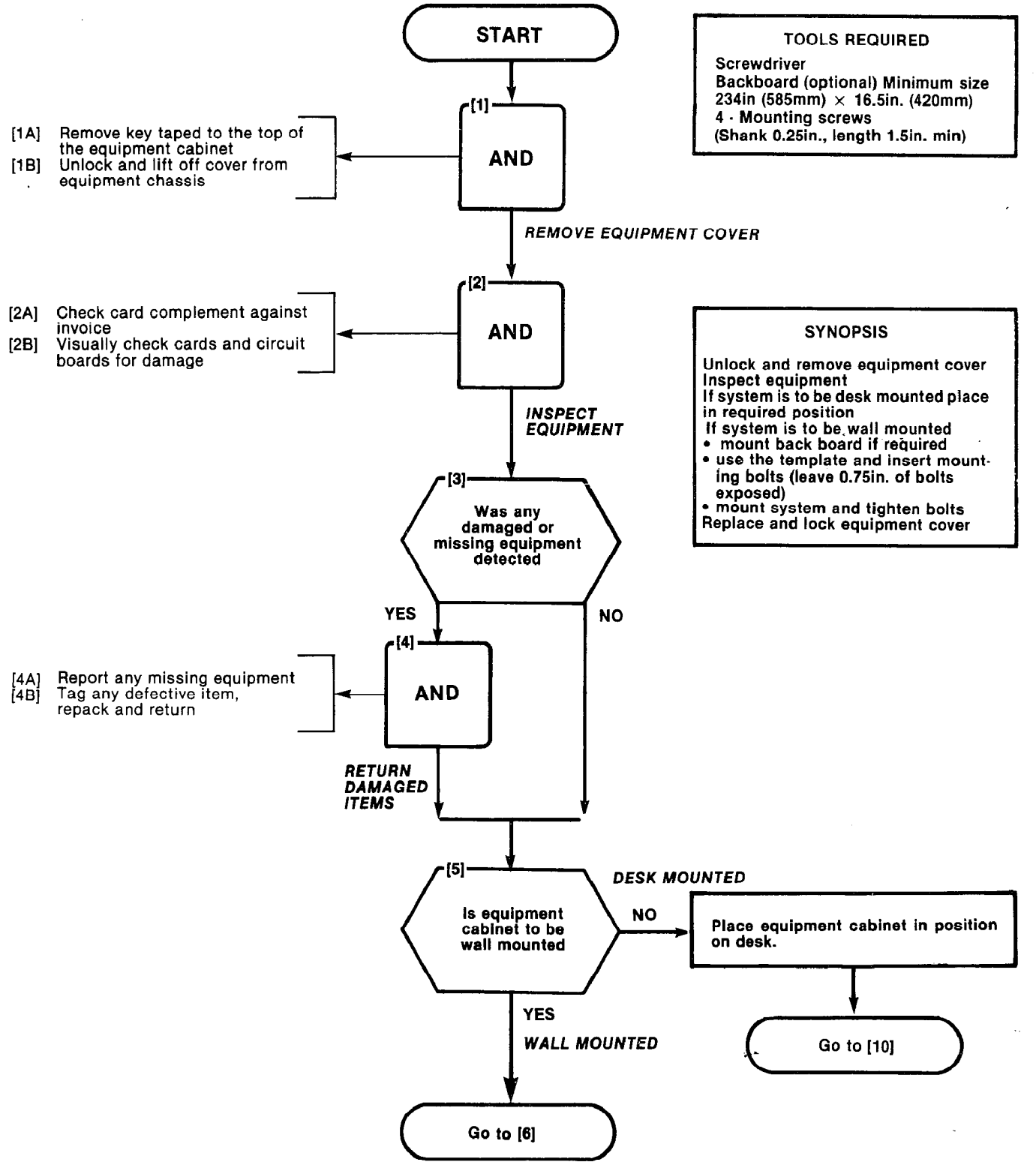

TOOLS REQUIRED

Screwdriver
Backboard (optional) Minimum size 234in (585mm) × 16.5in. (420mm)
4 - Mounting screws (Shank 0.25in., length 1.5in. min)

SYNOPSIS

Unlock and remove equipment cover
Inspect equipment
If system is to be desk mounted place in required position
If system is to be wall mounted
- mount back board if required
- use the template and insert mounting bolts (leave 0.75in. of bolts exposed)
- mount system and tighten bolts

Replace and lock equipment cover

INSTALL EQUIPMENT CABINET
MAP200-002
Issue 2, March 80
Sheet 2 of 3

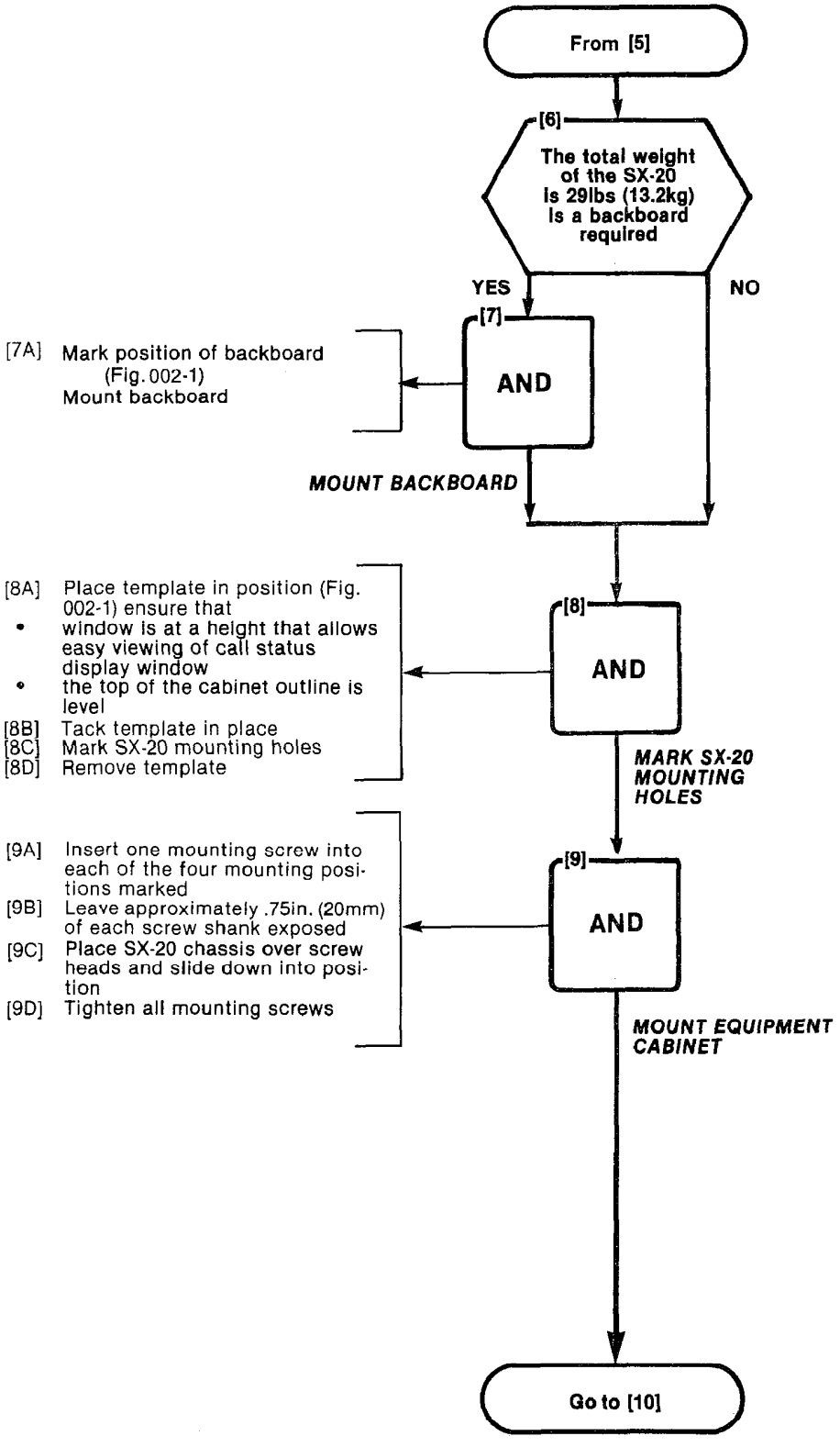

INSTALL EQUIPMENT CABINET
MAP200-002
Issue 2, March 80
Sheet 3 of 3

From [5] and [9]

[10]

Is installation to be completed at this time

YES

Go to MAP200-003

NO

[11]

AND

[11A] Replace equipment cover
[11B] Lock cover in position

REPLACE COVER

FINISH

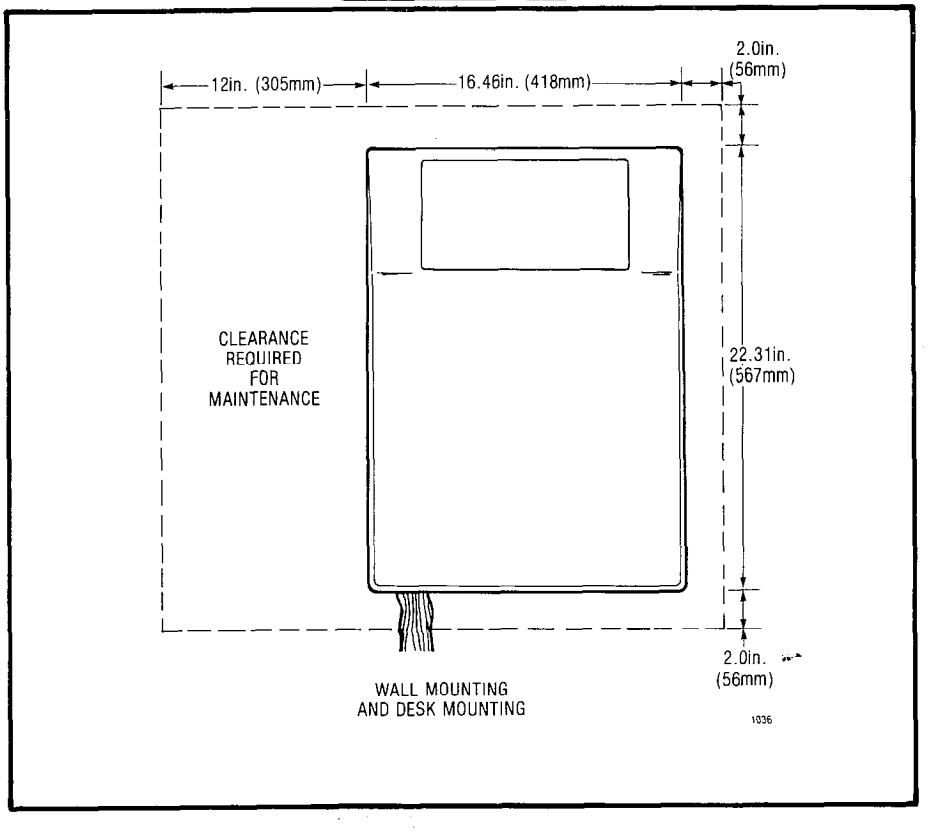

Fig. 002-1

SYSTEM INSTALLATION
MAP200-003
Issue 3, March 80
Sheet 1 of 13

SYNOPSIS

Install PROM module if required
Install RAM battery pack
Set CPU card switches (Table 003-1)
Remove Trunk modules
Set Trunk module switches
(ON = Loop Start, OFF = Ground Start)
Install Trunk modules
Install required Line cards

TOOLS REQUIRED

Small Slotted Screwdriver

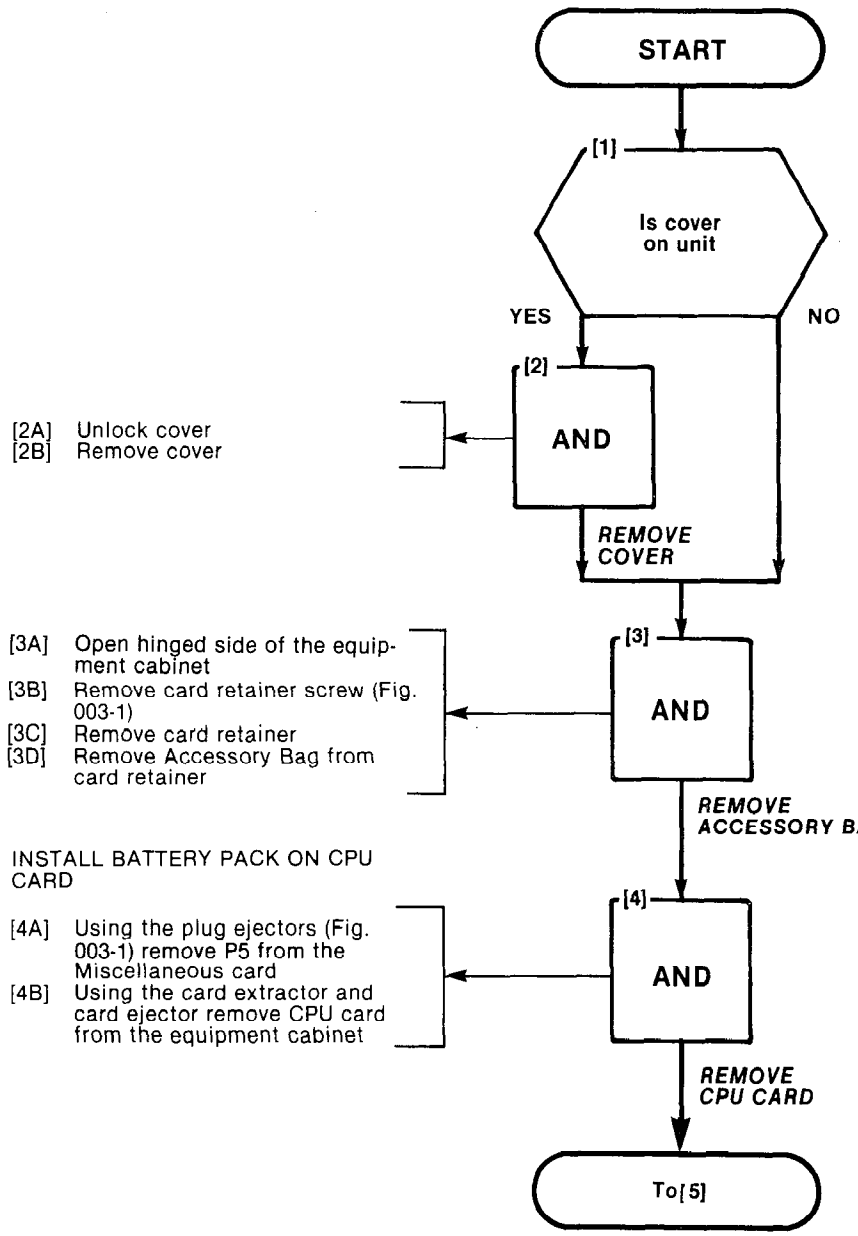

TABLE 003-1

CPU CARD SWITCH FUNCTIONS	
SWITCH	FUNCTION
1.	DISPLAY ORIENTATION DESK MOUNT-CLOSED DISPLAY ORIENTATION WALL MOUNT-OPEN
2.	RESERVED
3.	RESERVED
4.	RESERVED
5.	10 BUTTON CONSOLE-CLOSED 6 BUTTON CONSOLE-OPEN
6.	EQUIPMENT NO. 01 EXTENSION-CLOSED EQUIPMENT NO. 01-TEST LINE-OPEN
7.	3 DIGIT NUMBERING PLAN-CLOSED 2 DIGIT NUMBERING PLAN-OPEN
8.	REVIEW MODE-CLOSED PROGRAMMING MODE-OPEN

SYSTEM INSTALLATION
MAP200-003
Issue 3, March 80
Sheet 2 of 13

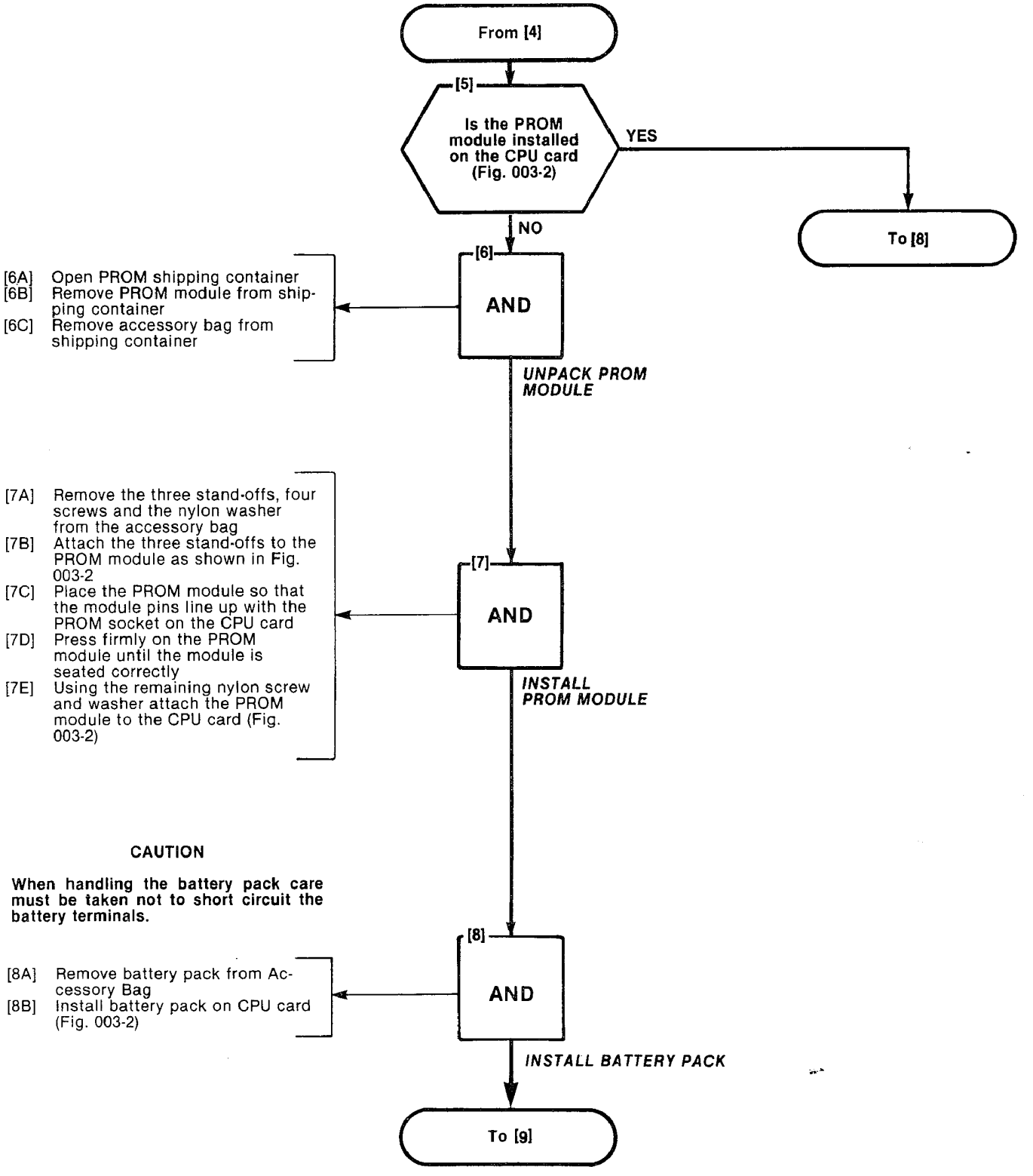

SYSTEM INSTALLATION
MAP200-003
Issue 3, March 80
Sheet 3 of 13

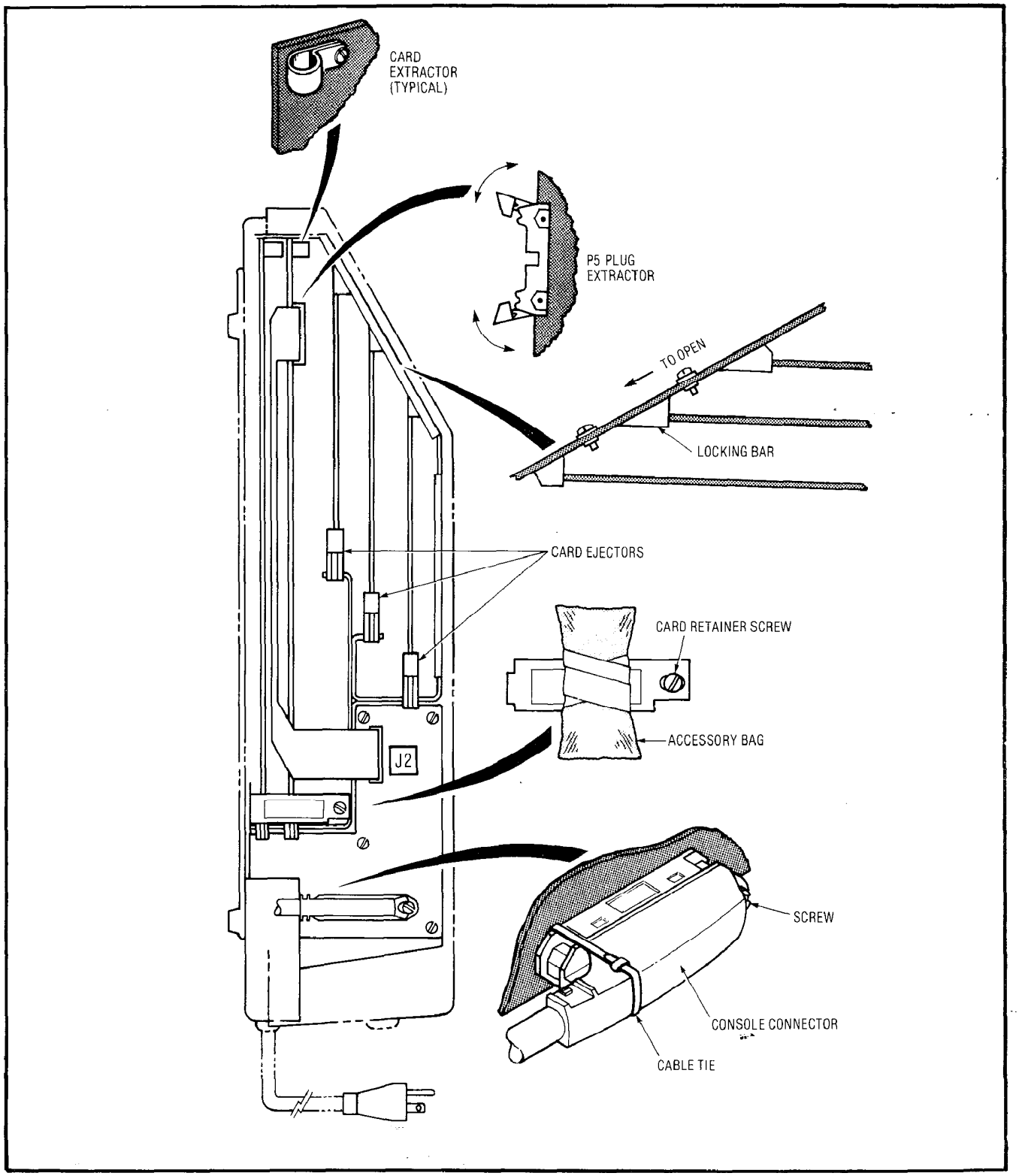

Fig. 003-1

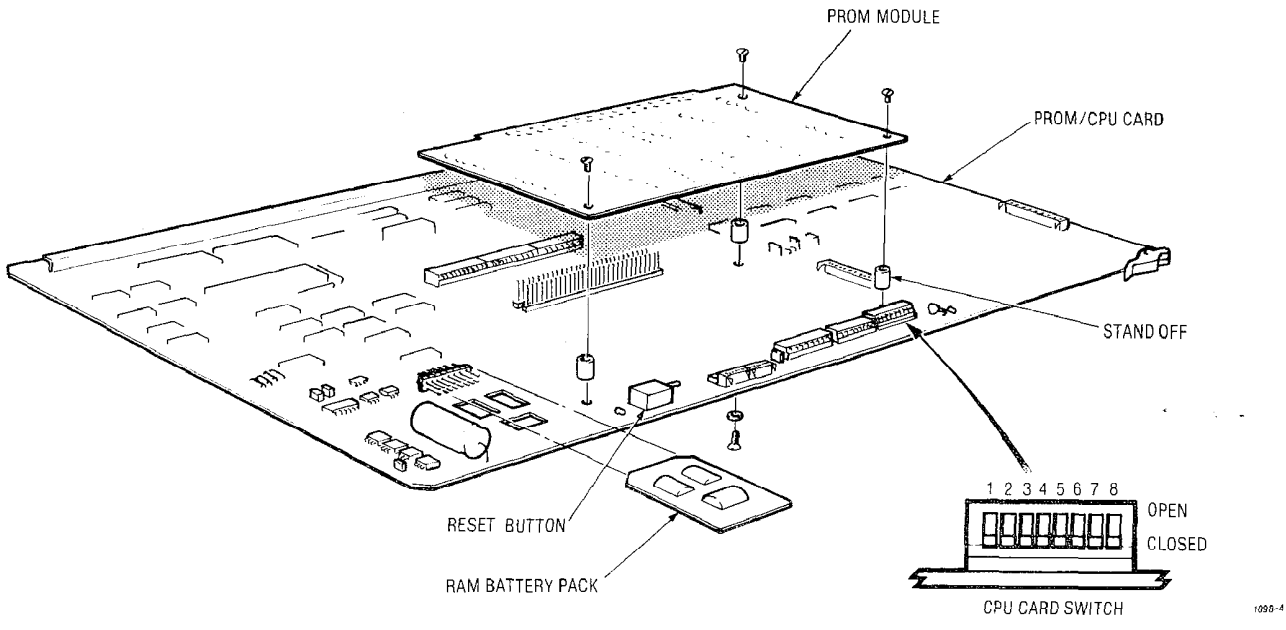

CPU CARD SWITCH FUNCTIONS

SWITCH	FUNCTION
1.	DISPLAY ORIENTATION DESK MOUNT-CLOSED DISPLAY ORIENTATION WALL MOUNT-OPEN
2.	RESERVED
3.	RESERVED
4.	RESERVED
5.	10 BUTTON CONSOLE-CLOSED 6 BUTTON CONSOLE-OPEN
6.	EQUIPMENT NO. 01-EXTENSION-CLOSED EQUIPMENT NO. 01-TEST LINE-OPEN
7.	3 DIGIT NUMBERING PLAN CLOSED 2 DIGIT NUMBERING PLAN-OPEN
8.	REVIEW MODE-CLOSED PROGRAMMING MODE-OPEN

Fig. 003-2

SYSTEM INSTALLATION
MAP200-003
Issue 3, March 80
Sheet 5 of 13

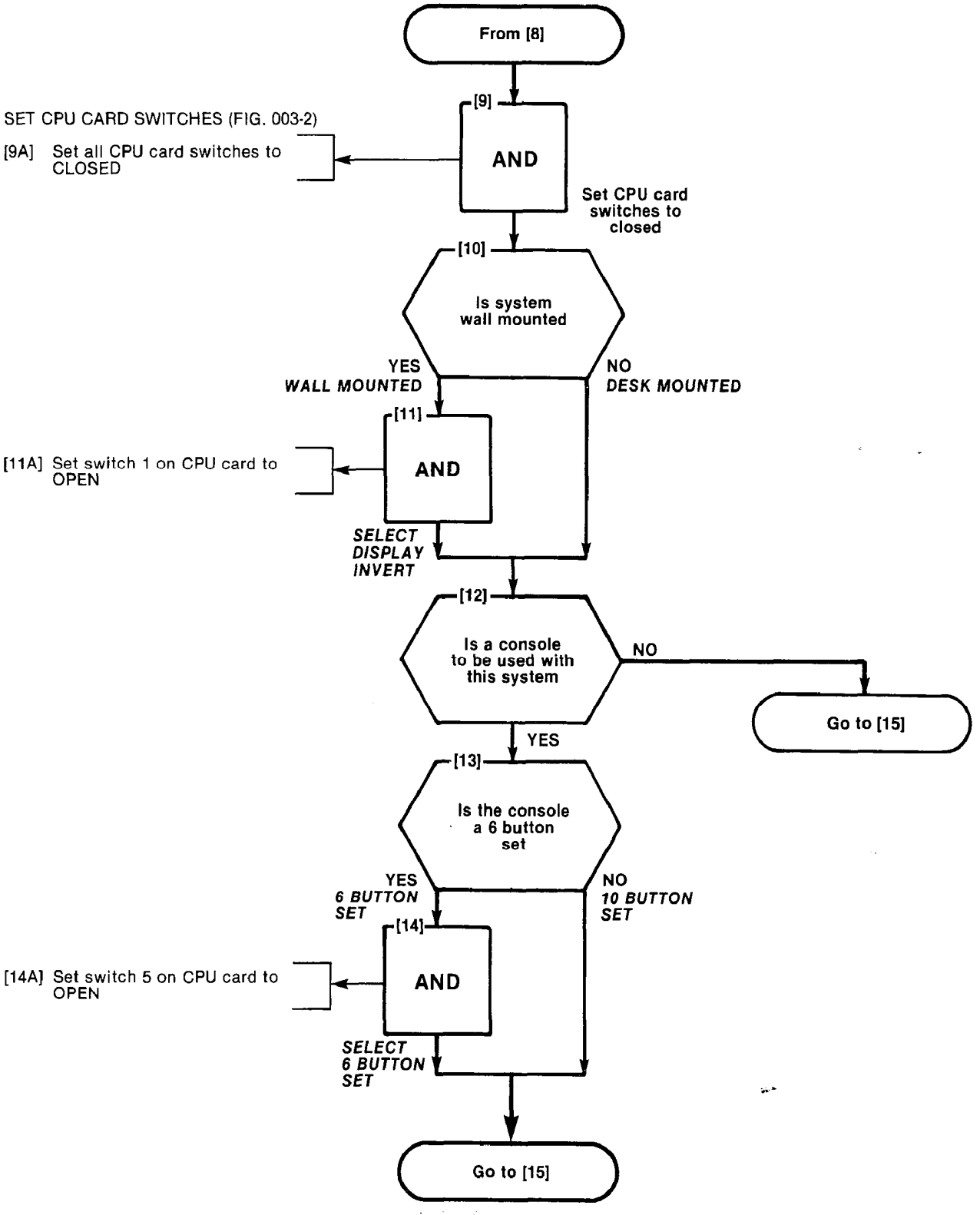

SYSTEM INSTALLATION
MAP200-003
Issue 3, March 80
Sheet 6 of 13

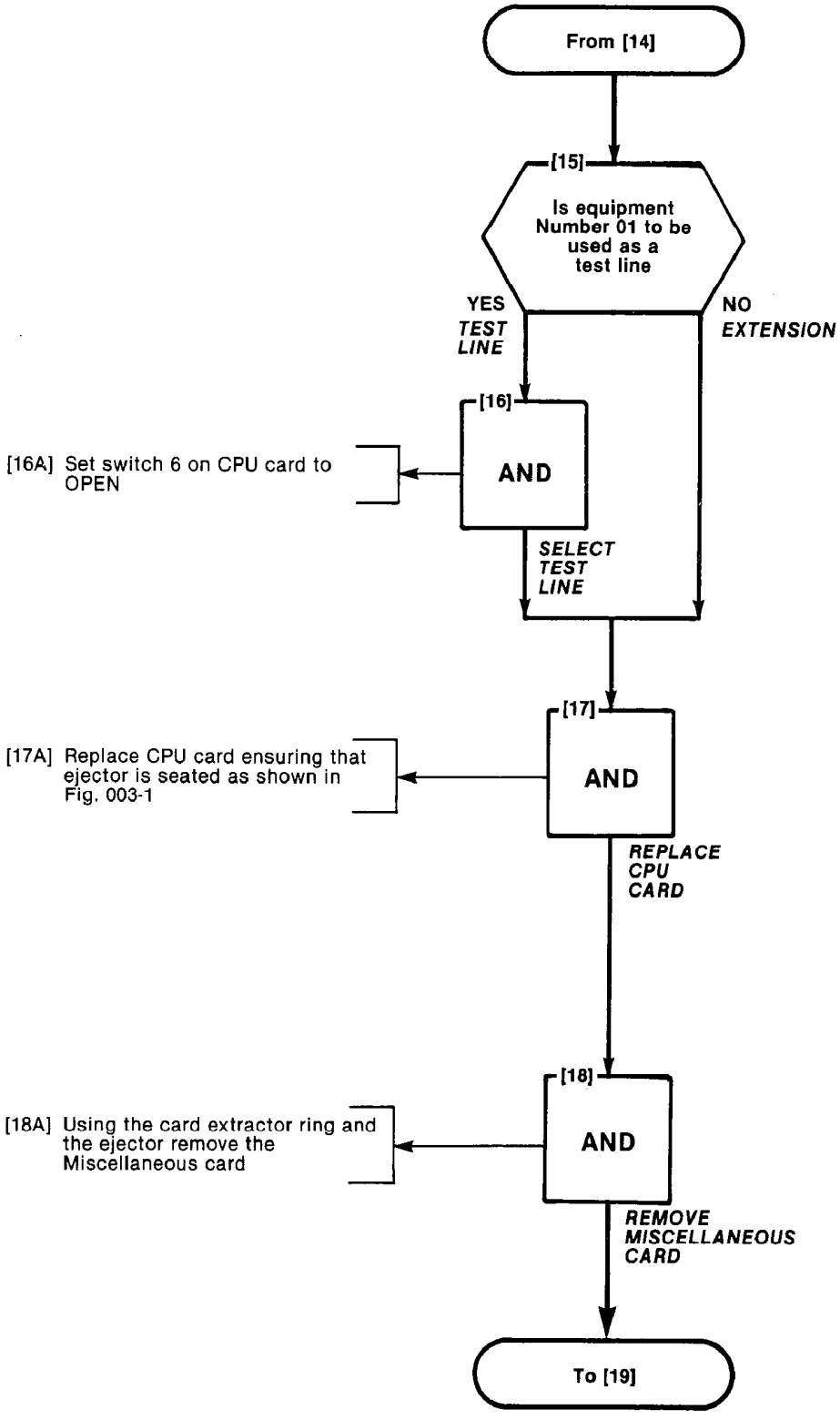

SYSTEM INSTALLATION
MAP200-003
Issue 3, March 80
Sheet 7 of 13

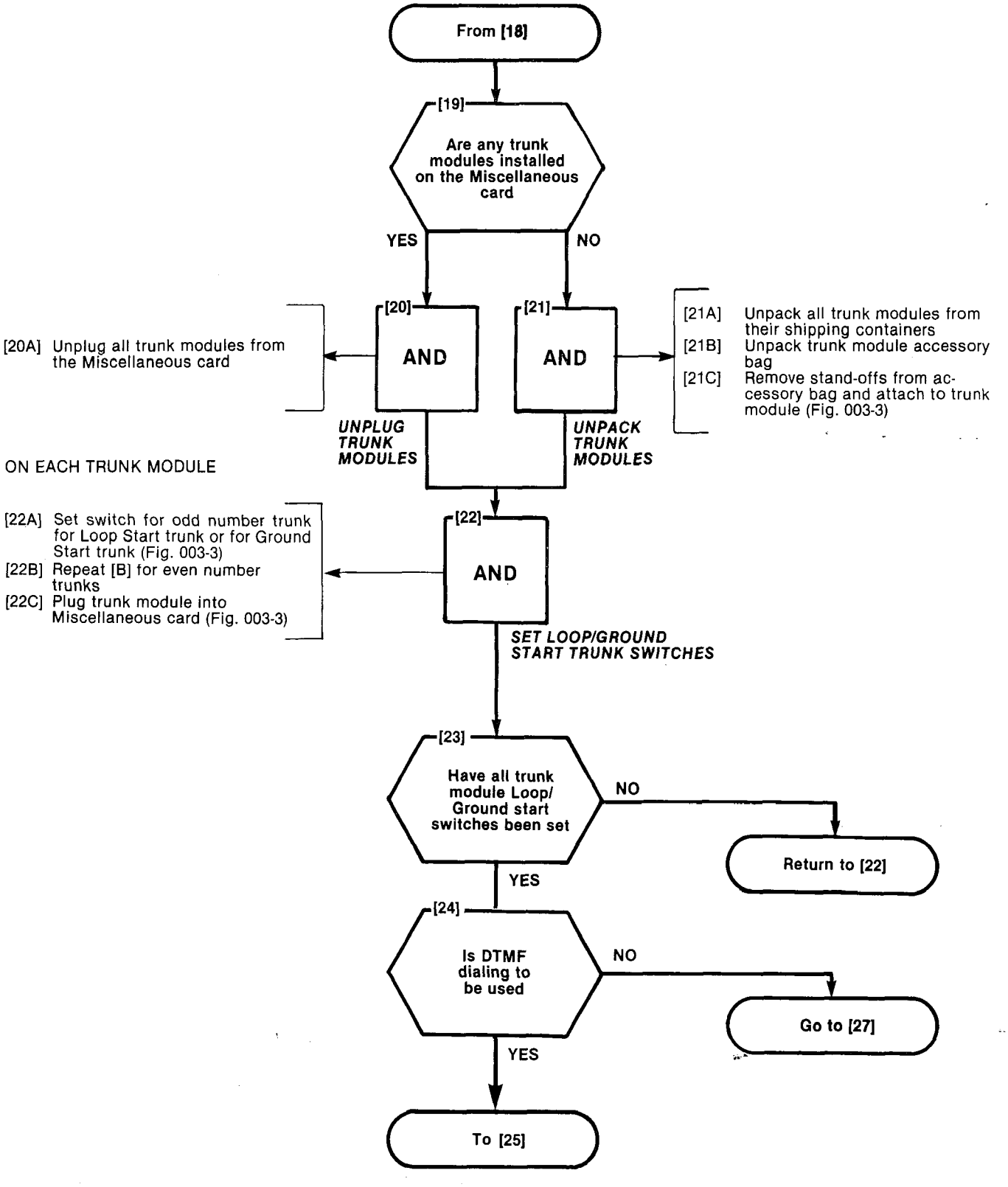

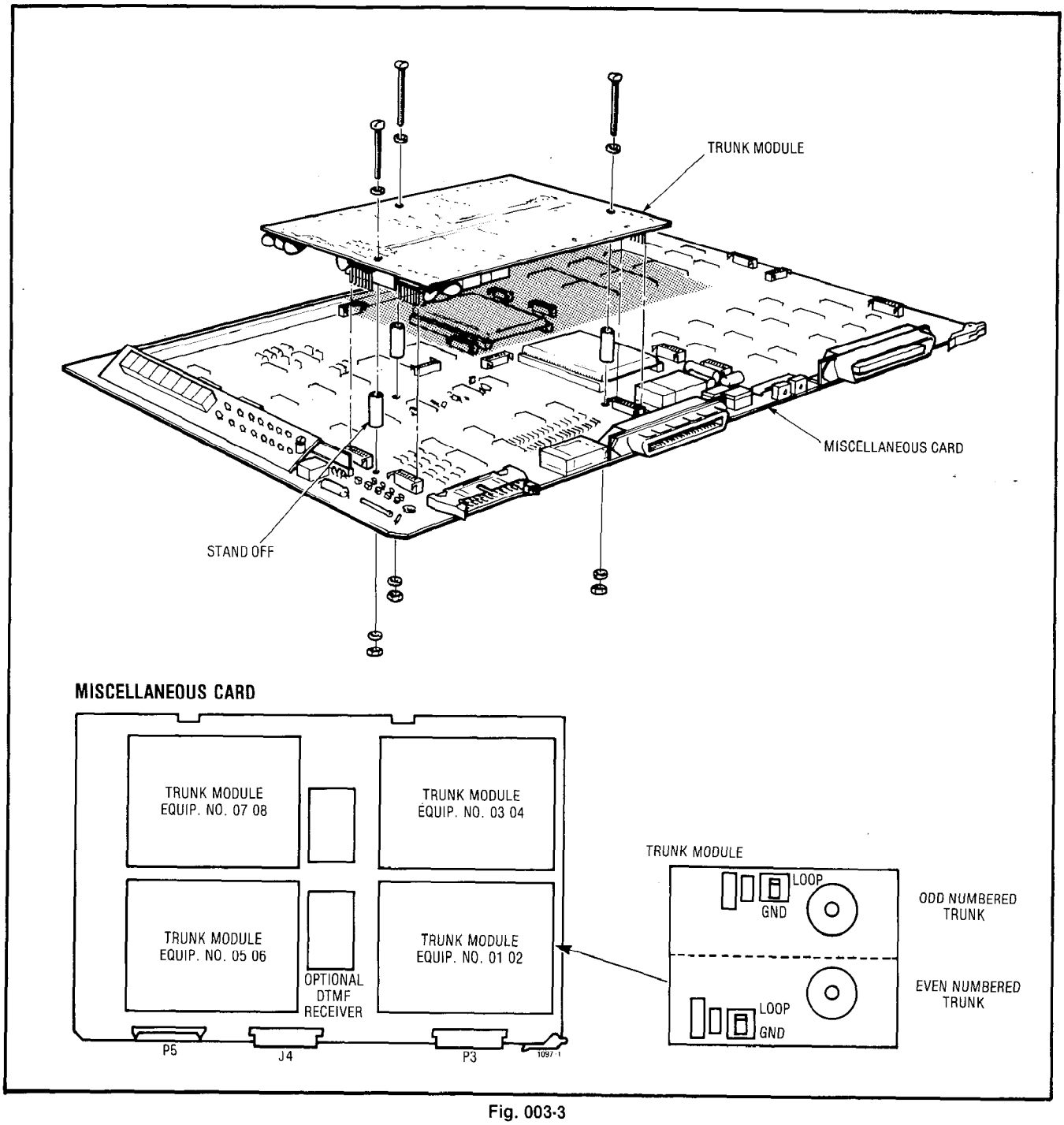
TRUNK MODULE
MISCELLANEOUS CARD
STAND OFF
MISCELLANEOUS CARD
TRUNK MODULE EQUIP. NO. 07 08
TRUNK MODULE EQUIP. NO. 03 04
TRUNK MODULE EQUIP. NO. 05 06
TRUNK MODULE EQUIP. NO. 01 02
OPTIONAL DTMF RECEIVER
P5
J4
P3
1097-1
TRUNK MODULE
LOOP
GND
ODD NUMBERED TRUNK
EVEN NUMBERED TRUNK
LOOP
GND

Fig. 003-3

SYSTEM INSTALLATION
MAP200-003
Issue 3, March 80
Sheet 9 of 13

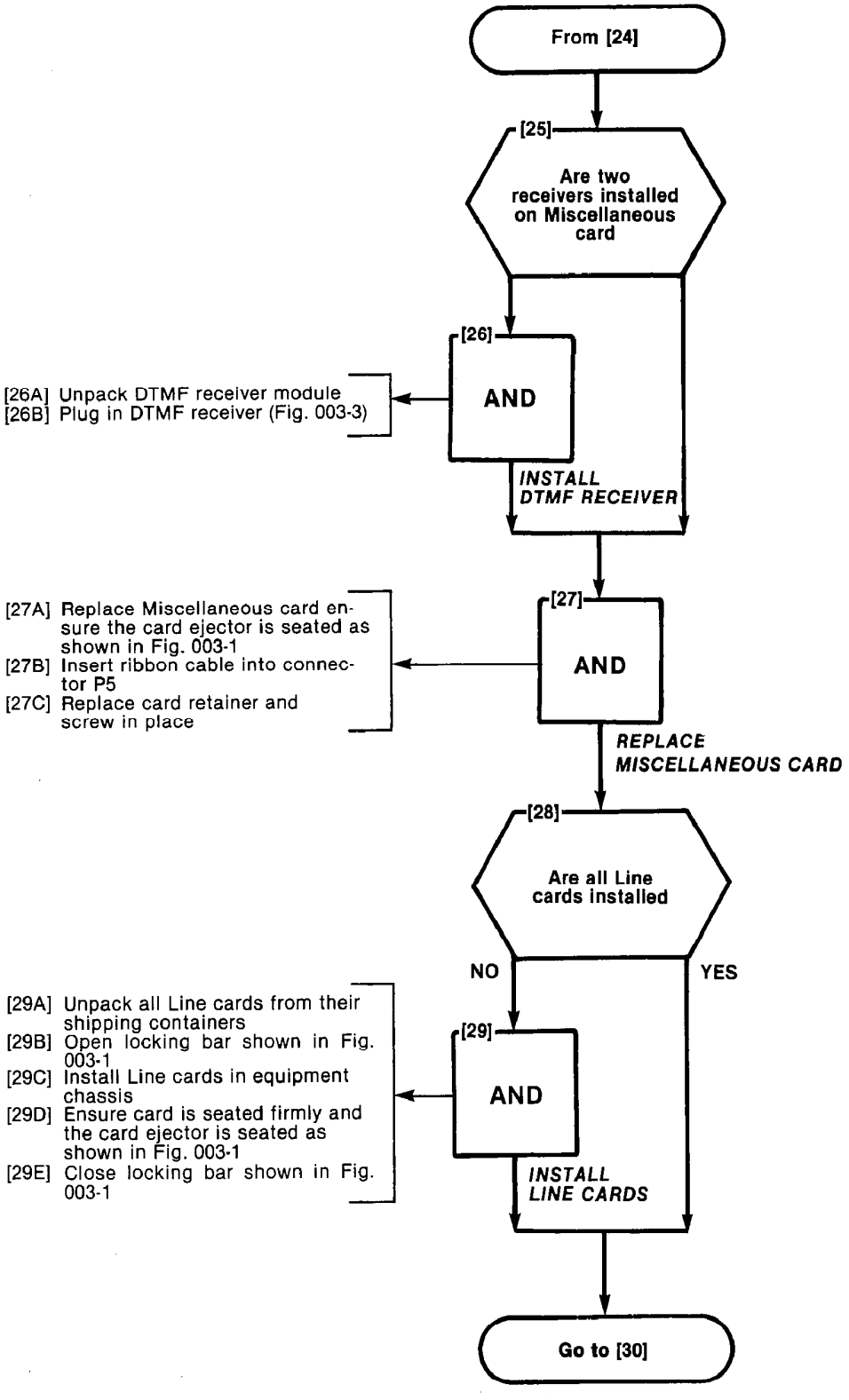

SYSTEM INSTALLATION
MAP200-003
Issue 3, March 80
Sheet 10 of 13

From [29]

[30] AND

[30A] Mark each connector and cable with the connector number (Fig. 003-5)
[30B] Run required cables between the SX-20 and the cross connect frame
[30C] Loosen cable clamp retaining screws (Fig. 003-4)

RUN INTERCONNECT CABLES

[31] Is an attendant console to be used with this system

NO → Go to [34]

YES

CONNECT CONSOLE

[32] AND

[32A] Remove the retaining screw from the console connector
[32B] Remove screw from connector J1
[32C] Insert screw into console connector
[32D] Remove one cable tie from the accessory bag and position as shown in Fig. 003-1

Note: Ensure console (keyset) used complies with the wiring specified in Table 6-1.

PREPARE CONSOLE CONNECTOR MOUNTING HARDWARE

[33] AND

[33A] Feed console connector through the cable entry and plug into J1
[33B] Tighten console connector retaining screw
[33C] Pass cable tie around console connector and tighten (Fig. 003-1)

INSERT CONSOLE CONNECTOR

CONNECT TRUNK, MISCELLANEOUS AND LINE CABLES

[34] AND

[34A] Feed trunk connector through the cable entry and insert into P3
[34B] Feed Miscellaneous cable connector through the cable entry and insert into J4
[34C] Feed line connectors through the cable entry and insert into the required line card connectors (J6, J7, J8)
[34D] Tighten all retaining screws

INSERT LINE, TRUNK AND MISCELLANEOUS CONNECTORS

Go to [35]

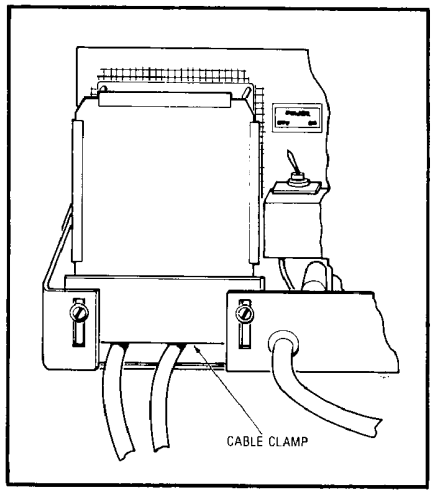

Fig. 003-4

SYSTEM INSTALLATION
MAP200-003
Issue 3, March 80
Sheet 11 of 13

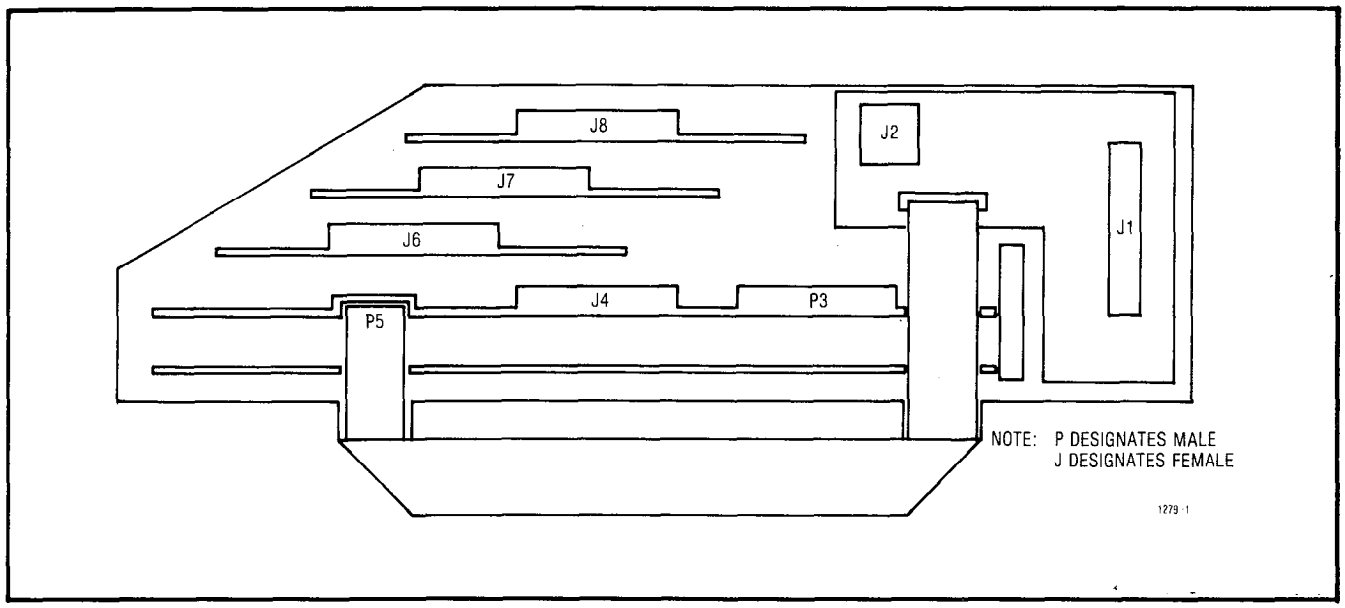

Fig. 003-5

SYSTEM INSTALLATION
MAP200-003
Issue 3, March 80
Sheet 12 of 13

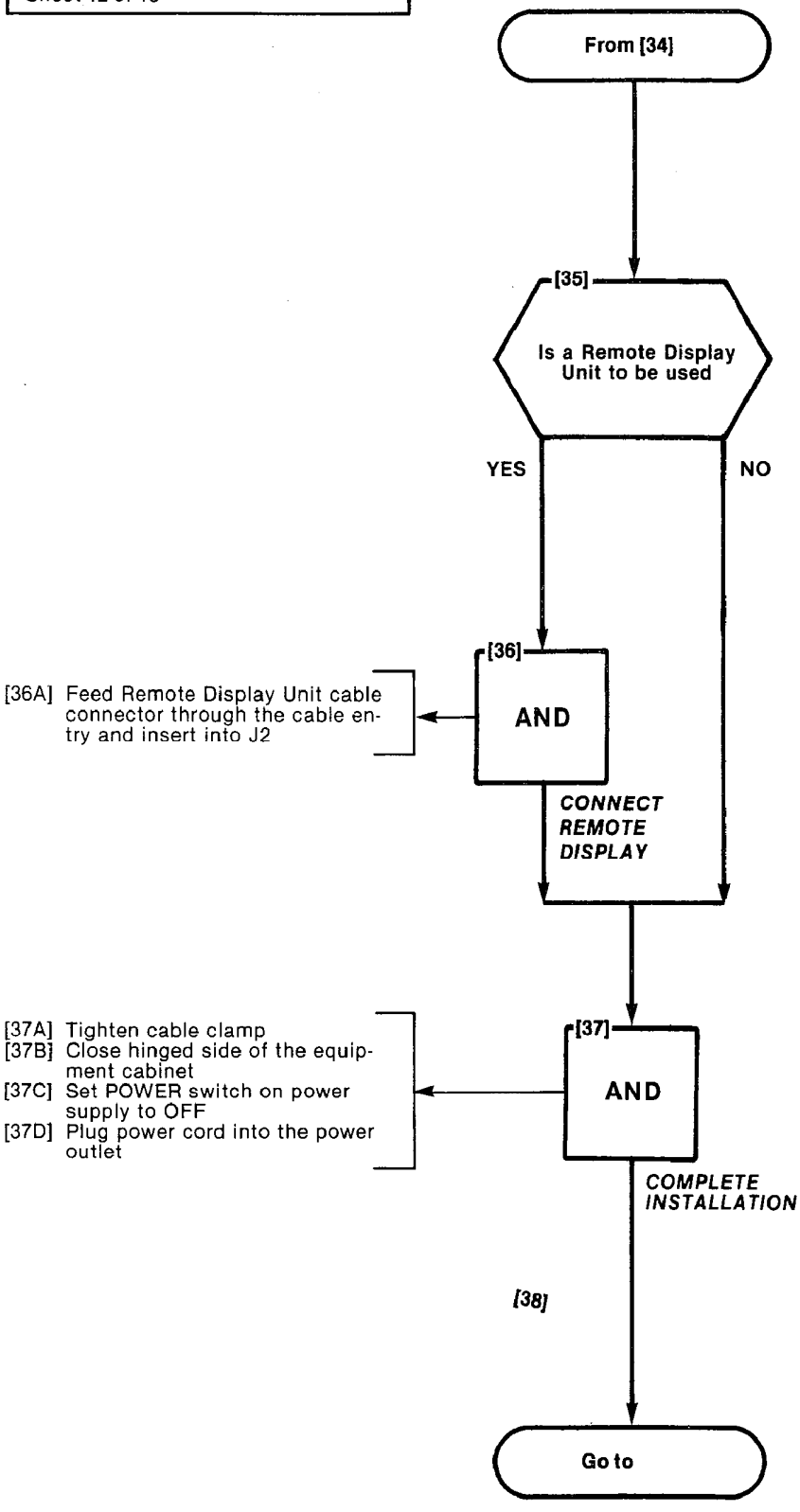

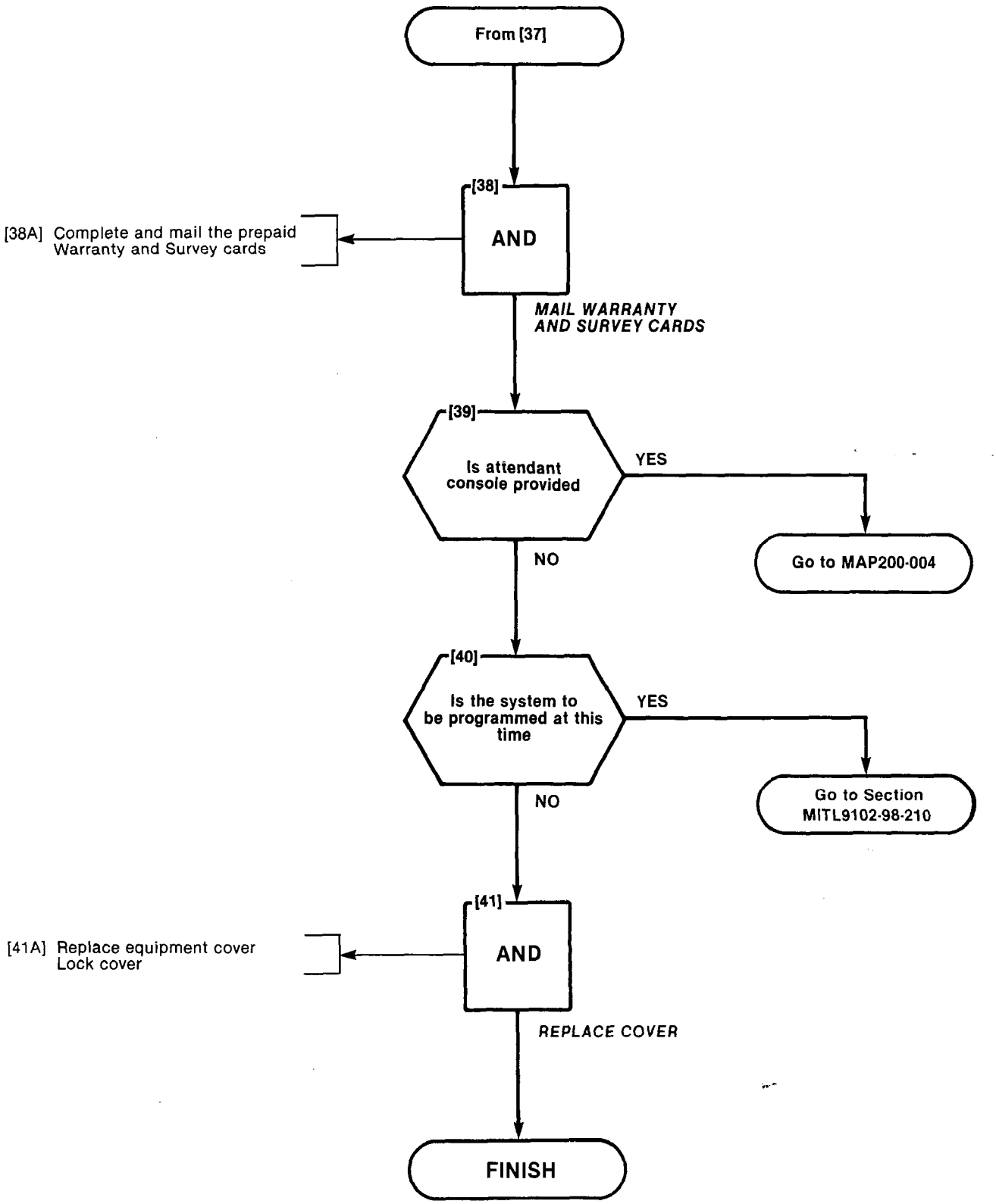
From [37]
[38]
AND
[38A] Complete and mail the prepaid Warranty and Survey cards
MAIL WARRANTY AND SURVEY CARDS
[39]
Is attendant console provided
YES
Go to MAP200-004
NO
[40]
Is the system to be programmed at this time
YES
Go to Section MITL9102-98-210
NO
[41]
AND
[41A] Replace equipment cover Lock cover
REPLACE COVER
FINISH

INSTALL CONSOLE BUTTON DESIGNATIONS
MAP200-004
Issue 2, March 80
Sheet 1 of 3

SYNOPSIS
Switch power ON
Determine designation sequence
Insert designation tabs

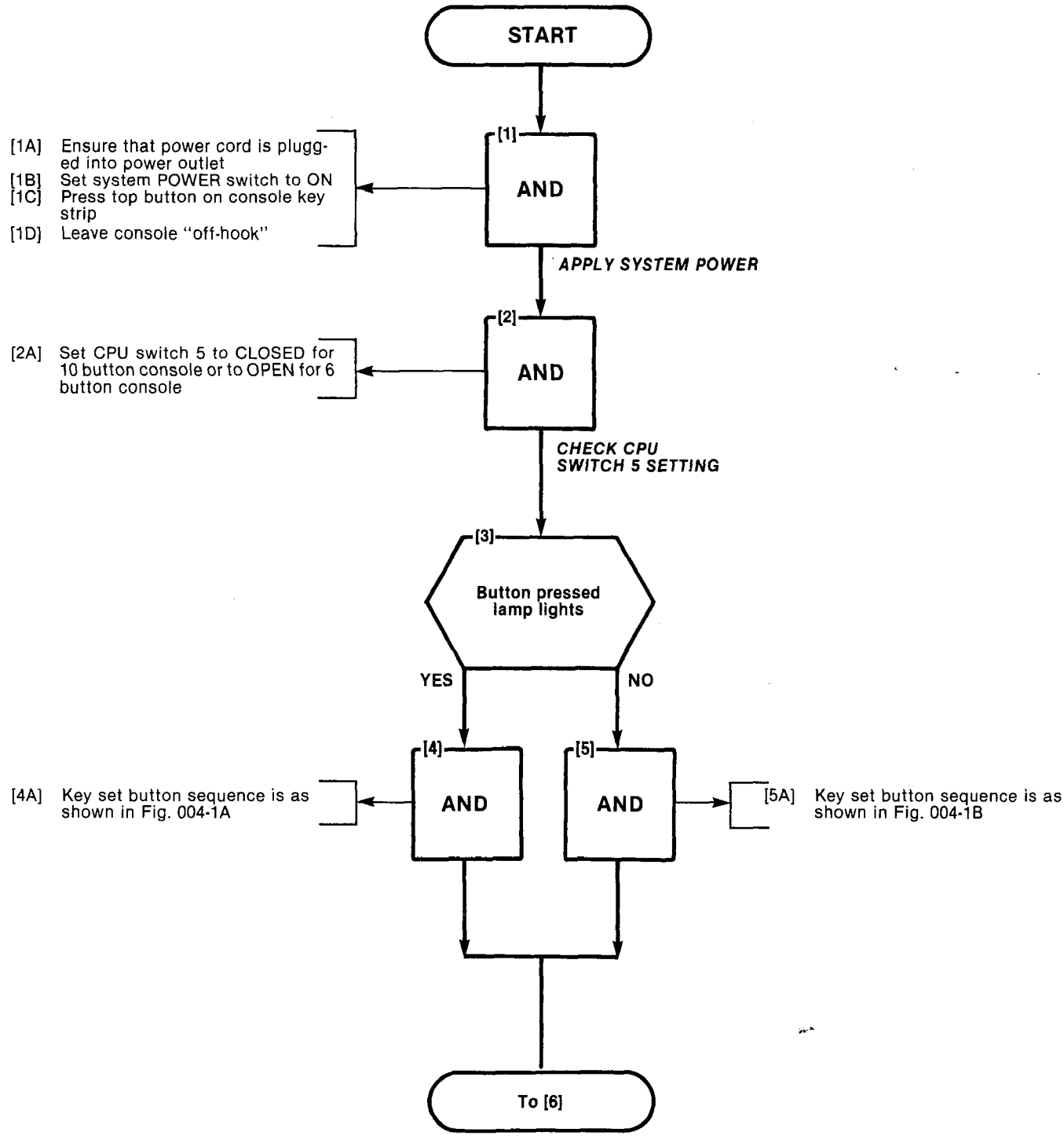

INSTALL CONSOLE BUTTON DESIGNATIONS
MAP200-004
Issue 2, March 80
Sheet 2 of 3

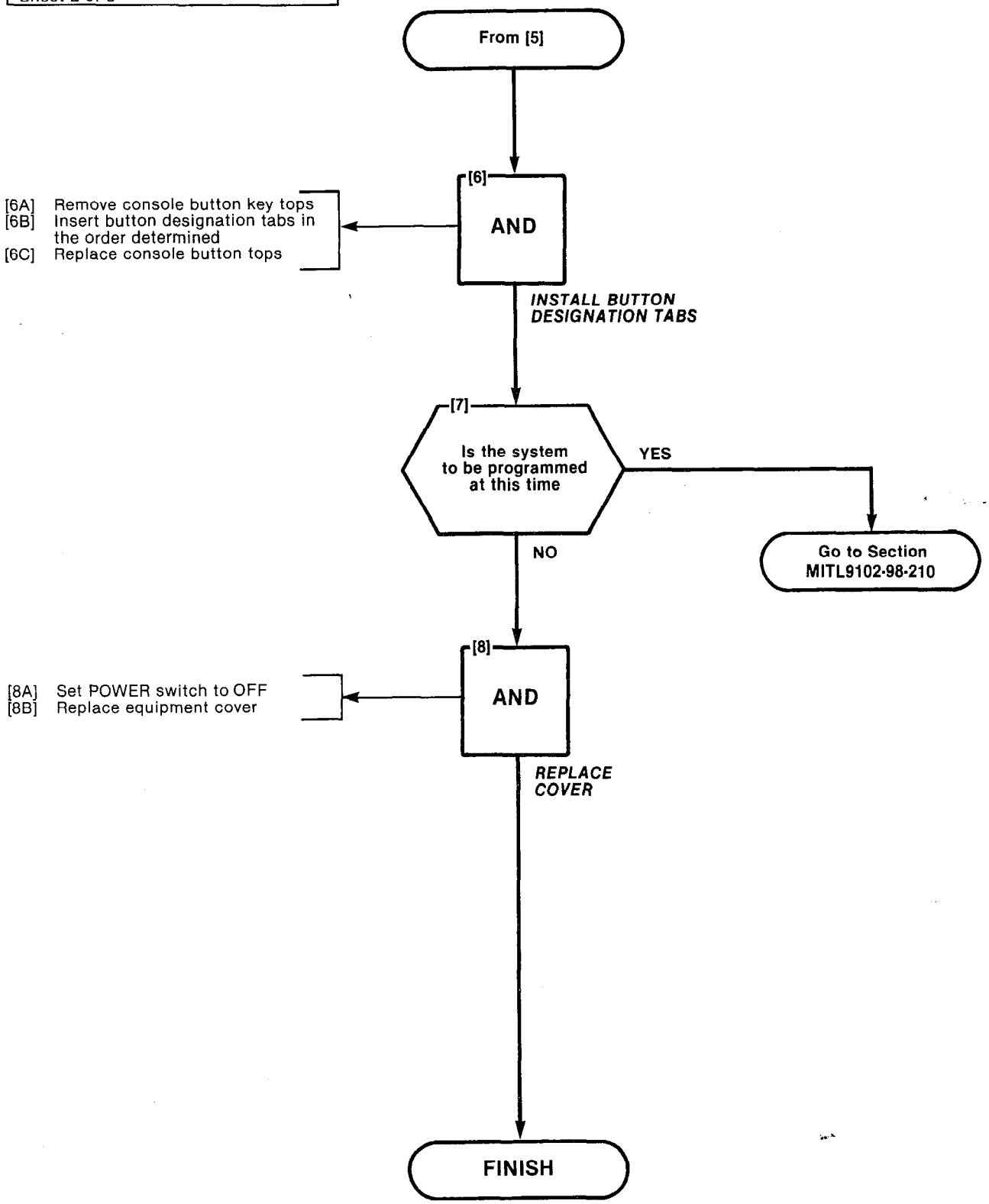

INSTALL CONSOLE BUTTON DESIGNATIONS
MAP200-004
Issue 2, March 80
Sheet 3 of 3

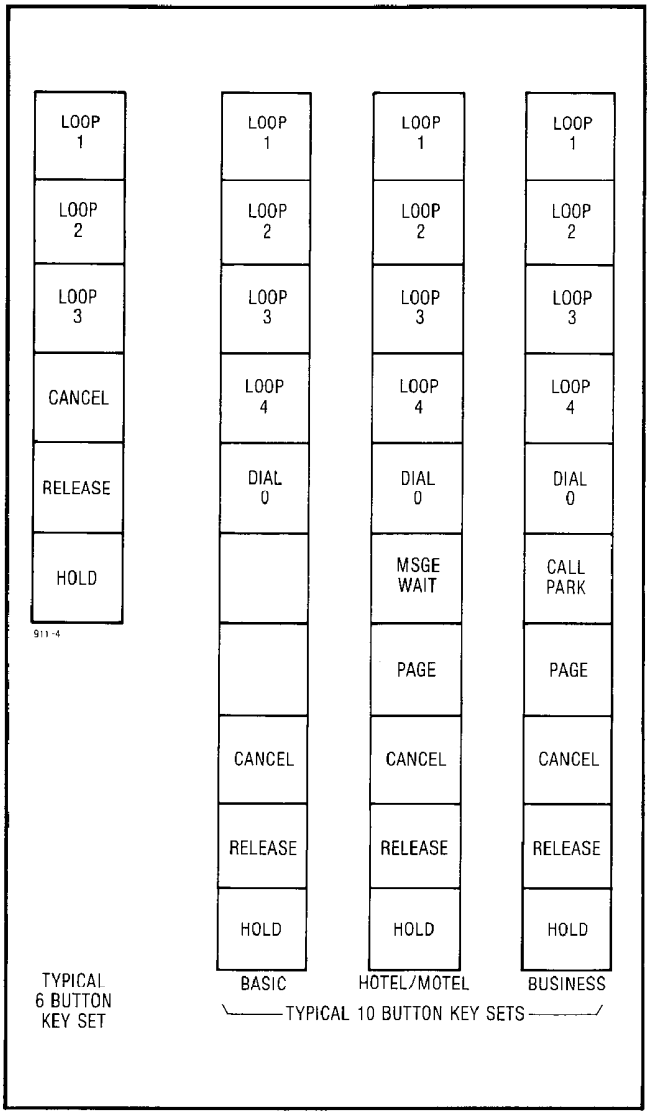

Fig. 004-1A

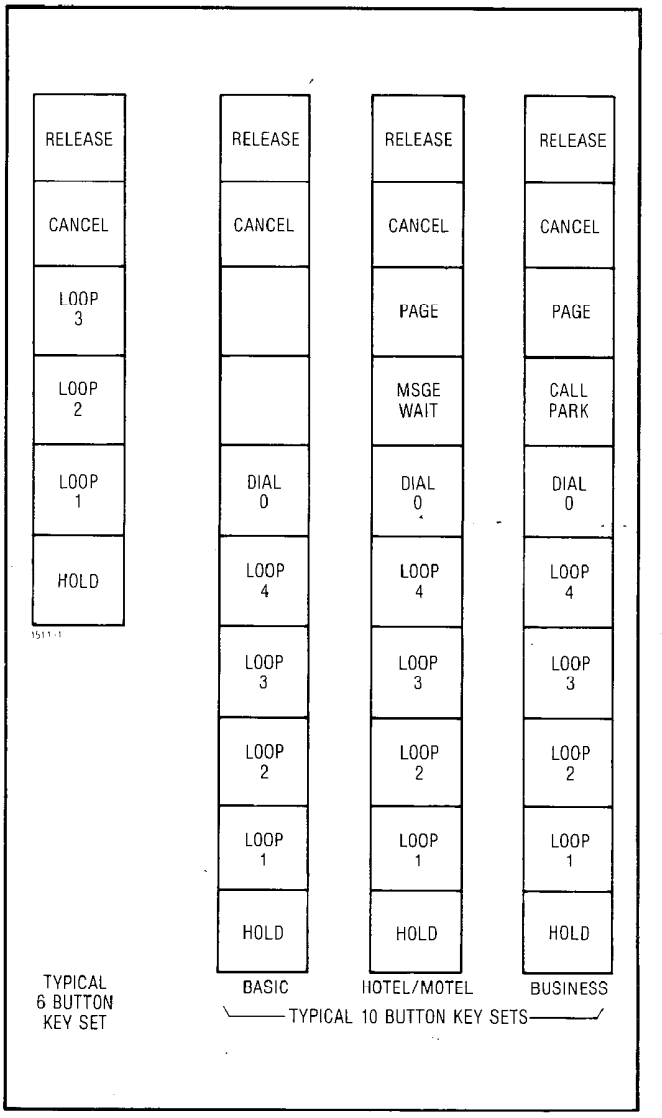

Fig. 004-1B

APPENDIX 3
FCC INTERCONNECTION REQUIREMENTS

A. TELEPHONE COMPANY INTERCONNECTION

General

A.01 This equipment has been approved by the Federal Communications Commission (FCC) as not being harmful to the telephone network when connected directly to the telephone lines through the standard 50-pin blue ribbon plug prescribed by the FCC Rule. This section is applicable to telephone interconnection in the United States.

Notification

A.02 Prior to the interconnection of this equipment, the local telephone company is to be notified; inform the company that you have FCC-registered equipment which you wish to connect to their trunks. Give them the following information:

The Communications System being connected is a Mitel Model SX-20.

The 14 digit FCC Registration Number which is BN285B-67526-PF-E.

The Ringer Equivalence Number which is 1.1B.

The jacks or connectors required are RJ21X. (One jack is required for each group of 25 trunks).

Connection Limitations

A.03 Due to the FCC Part 68 Rule, no connection can be made to party lines and to coin telephone service.

Network Changes

A.04 The telephone company may make changes to its communication service; such changes may include the change of trunk circuits, changes in the operational characteristics of its trunks, etc. Before doing this, however, the company shall provide official notification, so that the operation of the PABX service will not be interrupted.

Maintenance Limitations

A.05 This equipment has been registered with the FCC for direct connection to the telephone network. Under the FCC Program, the user is restricted from making any changes or repairs and from performing any maintenance operations other than those specifically included in this Standard Practice.

A.06 Circuit cards may be removed by the user; however, replacement cards are to be supplied only by MITEL or its authorized agent. No field repair of circuit cards by the user is authorized.

A.07 No cabling or wiring changes within the console are permitted by the user. Plug-ended cables, as detailed in this Standard Practice, are to be used for all external connections between the console and the telephone company interface jack.

A.08 Power supply components and cabling is only to be changed or maintained by MITEL or by an authorized agent of MITEL.

Trouble Corrections

A.09 Most troubles are diagnosed by the circuitry of the system, and the console read-out indicates the circuit and card that is malfunctioning. Card replacement can be made by the user.

A.10 For more complex malfunctions, appropriate field service is provided by MITEL or its authorized agents.

PRINTED IN CANADA

SX-20™
COMMUNICATIONS SYSTEM
PROGRAMMING FORMS

1. GENERAL

1.001 This addendum supplements Section MITL9102-98-205, Issue 1, May 1980. Place this pink sheet ahead of the section.

1.002 This addendum is issued to correct an error in Part 3 Programming Forms of the section.

2. CHANGES TO SECTION

2.01 On Page 3, forth bullet on right hand side, change

- to exit from the selected command mode,

to read

- to exit from the selected programming mode and enter the command mode,

© Mitel Corporation 1980

™ Trademark of Mitel Corporation

PRINTED IN CANADA

SX-20™
COMMUNICATIONS SYSTEM
PROGRAMMING FORMS

CONTENTS PAGE

1. INTRODUCTION 1

General 1

2. INSTALLATION 1

Cabling 1
Programming 1

3. PROGRAMMING FORMS 2

General 2
Forms 2

1. INTRODUCTION

General

1.01 Installation of the SX-20 Communications System consists of connecting the system to the cross connect frame, applying power, completing the required programming forms and programming the system. Section MITL9102-98-200 details the physical installation procedures and Section MITL9102-98-210 the programming procedures. This section contains a general description of the system installation, an introduction to programming the system and all forms required to complete system programming.

2. INSTALLATION

Cabling

2.01 All connections for the line and trunk circuits are made from the cross connect frame to the SX-20 through 25 pair connector-ended cables. The six or ten button console is connected to the equipment cabinet using a 25 pair connector-ended cable wired in accordance with Section MITL9102-98-200.

Programming

2.02 Programming the SX-20 consists of completing the required programming forms and entering data into the system using the system programs. Eleven different programs are provided, each allowing a different aspect of the system configuration to be entered into the system memories.

- **System Options Programming (Command Number 61)** - defines the options that may be enabled on a system wide basis

- **Feature Access Codes (Command Number 62)** - a number of features in the system have special access codes. These codes may be programmed in the Hotel/Motel and Business features packages. In the basic features package the feature access codes are assigned by the system and are as shown in the Default Numbering Plan, Table 1.

- **Toll Control Plan Programming (Command Numbers 63 and 64)** - the SX-20 allows two independant Toll Control Plans to be specified. Command Number 63 provides access to Toll Control Plan 1 and Command Number 64 access to Toll Control Plan 2.

- **Trunk Group Programming (Command Number 65)** - a maximum of four individual Trunk Groups may be programmed within each system. This command allows the parameters for each individual trunk group to be entered.

- **Trunk Programming (Command Number 66)** - this program allows each customer to specify the types of trunks employed in the system, their characteristics, and the day and night answer modes (e.g. console or extension)

© Mitel Corporation 1980

™ Trademark of Mitel Corporation

- **Class-of-Service (COS) Programming (Command Number 67)** - each SX-20 can accommodate up to four different Classes-Of-Service. Each COS details which features may be accessed by stations assigned that COS.

- **Extension Programming (Command Number 68)** - each extension in the system may be programmed with a specific COS, Toll Restriction, Pickup Group (Business features only) and extension number (Hotel/Motel and Business features only).

- **Extension Numbering - Block Programming (Command Number 69)** - where it is desirable to assign sequential extension numbers to sequential extension equipment numbers (i.e. a block of extensions), block programming may be used. In this case a block of numbers is assigned in the time taken to program an individual extension.

- **Extension COS, Toll Restriction and Pickup Group - Block Programming (Command Number 70)** - this program allows the same COS, Toll Restriction and Pickup Group access to be assigned to a block of extension equipment numbers.

- **Busy Lamp Field (Remote Display) Programming (Command Number 71)** - in the Hotel/Motel and Business features packages the extension numbers displayed on the Busy Lamp Field (of the Remote Display) may be programmed. Command Number 71 allows the extension number (0 or a multiple of 10) assigned to the first lamp in each row of the Busy Lamp Field to be specified.

Programming Forms

2.03 Part 3 of this section contains the programming forms associated with each of the system programs. Each form specifies the codes that are to be entered for each of the features or options, and also shows the default data associated with each register. To complete each form enter the required code in the space provided. Programming then consists of entering the codes exactly as shown on the programming forms. Step-by-step procedures for programming the system are detailed in Section MITL9102-98-210.

3. PROGRAMMING FORMS

General

3.01 This section contains the programming forms used during programming the system. On initial power-up the 'Default Data' for the system must be loaded and the Programming Mode selected. Programming then consists of entering the data from the required programming form.

3.02 Also included in this section are the points to be remembered during programming, error codes that may be encountered during programming, a list of the programming command numbers and the Default Numbering Plan.

Forms

3.03 The following forms provide all information required to define the data to be entered during programming.

Remember

- if programming from the Test Line use the cabinet display, if programming from the console the remote display may also be used
- to select the Test Line set switch 6 to OPEN
- to program the system set switch 8 to OPEN
- to enter data and/or display the next register dial * or flash switchhook
- error detected by the programmer: dial # to retain the original contents of the register; with a rotary, set enter error and rewrite with correct data
- error detected by the system: see following error codes section
- the digit(s) dialed changes the flashing digit(s), shown shaded in this manual
- all data upto the last digit to be changed MUST be entered
- to exit from the selected command mode, dial 0 only if the first digit in the register is flashing, or 00 only if the first two digits are flashing
- after programming is completed, set switch 8 to CLOSED - system operation normal, data may be reviewed
- to exit from the programming mode, press RELEASE key (on console) or replace handset

ERROR CODES

The SX-20 can detect certain errors made during programming. The detection of a programming error results in a display such as that below.

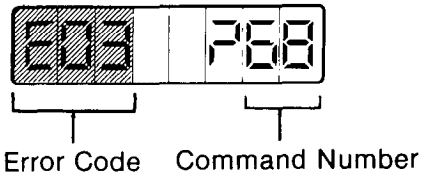

The meaning of the error code may be determined from the Table. The command number indicates the type of programming being performed at the time the error occured.

To exit from the error condition dial # OR flash switchhook twice. The display now shows the information it contained prior to the entries that included the error.

Error Code	Function
E01	Illegal Command Number entered
E02	Digit (0-9) dialed while error code was being displayed
E03	Number (Access Code) already exists, ie. Numbering Plan conflict
E04	Data out of range
E05	Extension number entered has too many digits
E06	Illegal extension number block. When programming extension numbers by block, all the extension numbers in the block must have the same number of digits (ie. 1, 2, or 3 digits)
E07	Too many digits dialed
E08	Illegal range of equipment numbers used in block programming (eg. 40-25)
E09	Command number entered is protected, set switch 8 on the CPU card to OPEN to proceed (see "Load & Check Default Data" Fig. 1)
E10	Command or data accessed is not available in this features package
E11	Data entered is protected, set switch 8 on the CPU card to OPEN to proceed
E12	Data field incomplete - enter all data for field that was flashing
E13	Extension number for first digit in the row on the busy lamp field of the Remote Display must be 0 or a multiple of 10.

1663-1

TABLE 1

Default Numbering Plan		Programming and Special Function Command Numbers	
0	- Console Access	61	- System Options Programming
10-59	- 2 Digit Extension Numbering	62	- Feature Access Codes Programming
110-181	- 3 Digit Extension Numbering	63	- Toll Control Plan 1 Programming
60	- Pager	64	- Toll Control Plan 2 Programming
61	- Call Forwarding - Follow Me	65	- Trunk Group Programming
62	- Call Forwarding - Busy	66	- Trunk Programming
63	- Trunk Group 3 Access	67	- Class-of-Service Programming
64	- Trunk Group 4 Access	68	- Extension Programming
65	- TAFAS Pickup	69	- Extension Numbering - Block Programming
66	- Call Hold	70	- Extension COS, Toll Restriction and Pickup Group - Block Programming
67	- Call Hold Retrieve (Local)	71	- Busy Lamp Field (Remote Display) Programming
68	- Call Hold Retrieve (Remote)	* 90	- Status Display Function - Trunk
69	- Dial Call Pickup	* 91	- Status Display Function - Extension
70	- Programming and Special Functions	* 92	- Status Display Function - System
71	- Attendant Functions	* 99	- Display Software Identity
751	- Call Park Access		
752	- Call Park Access		
753	- Call Park Access		
8	- Trunk Group 2 Access		
9	- Trunk Group 1 Access	* See Troubleshooting MITL9102-98-350	

1664-1

LOAD AND CHECK DEFAULT DATA

When an SX-20 is first powered-up the Default Data must be loaded. This data puts the system into a defined state with the basic features package numbering plan and a commonly used set of customer data. The Default Data is the same for every features package. After this data has been loaded, it may be changed to reflect the individual customer's requirements.

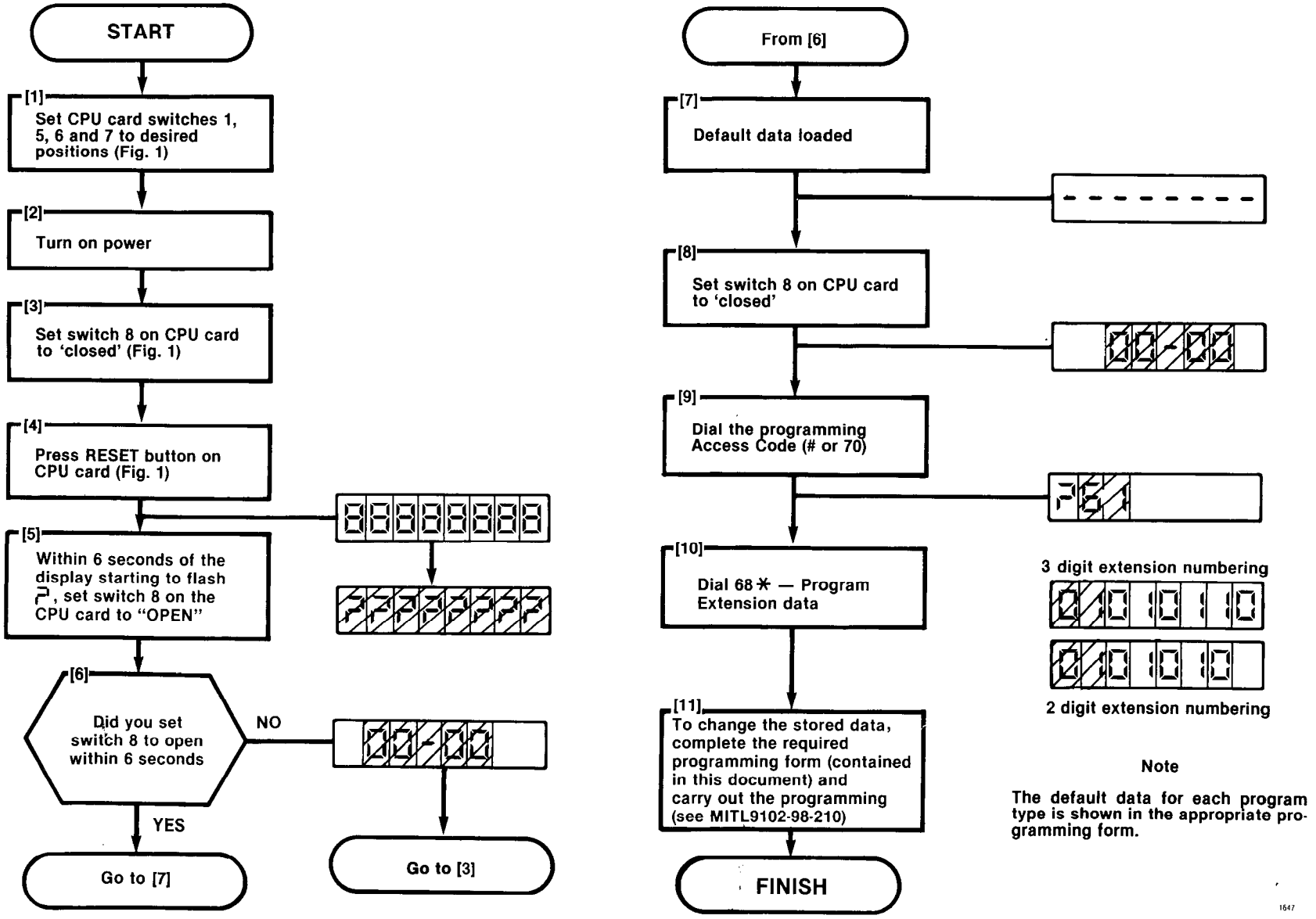

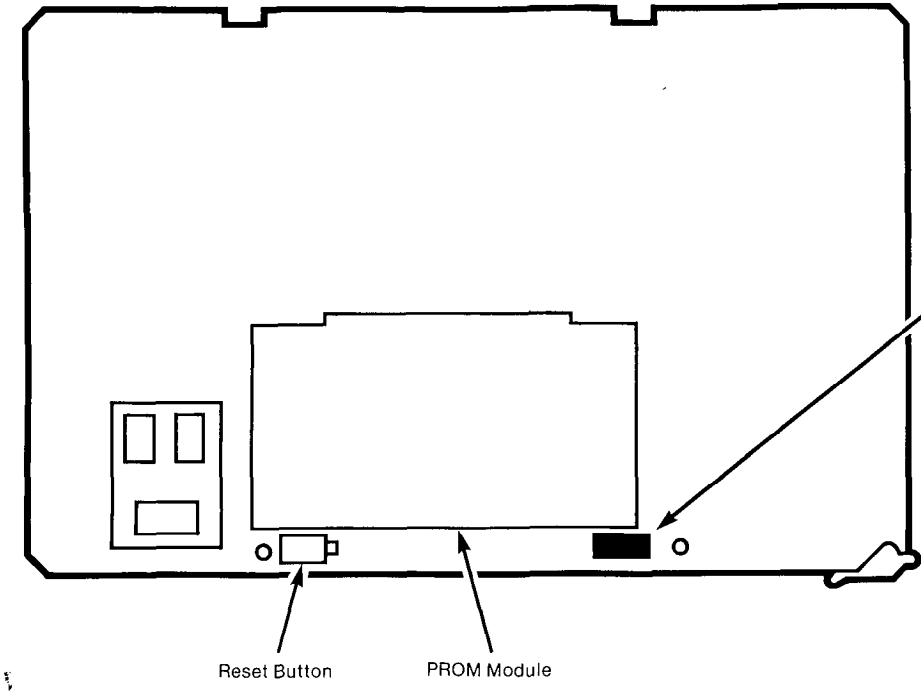

Programming Switch

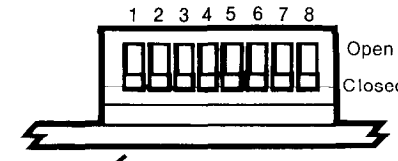

Switch Functions

1.	OPEN CLOSED	— Wall Mount — Desk Mount
2.	RESERVED	
3.	RESERVED	
4.	RESERVED	
5.	OPEN CLOSED	— 6 Button Console — 10 Button Console
6.	OPEN CLOSED	— Equipment Number 01 - Test Line — Equipment Number 01 - Extension
7.	OPEN CLOSED	— 2 Digit Default Extension Numbering (10-59) — 3 Digit Default Extension Numbering (110-181)
8.	OPEN CLOSED	— Program and Review Customer Data — Review (only) Customer Data

1662

Fig. 1 CPU Card

SYSTEM OPTIONS PROGRAMMING FORM (COMMAND NUMBER 61)

(For detailed information refer to MITL9102-98-210, MAP210-003)

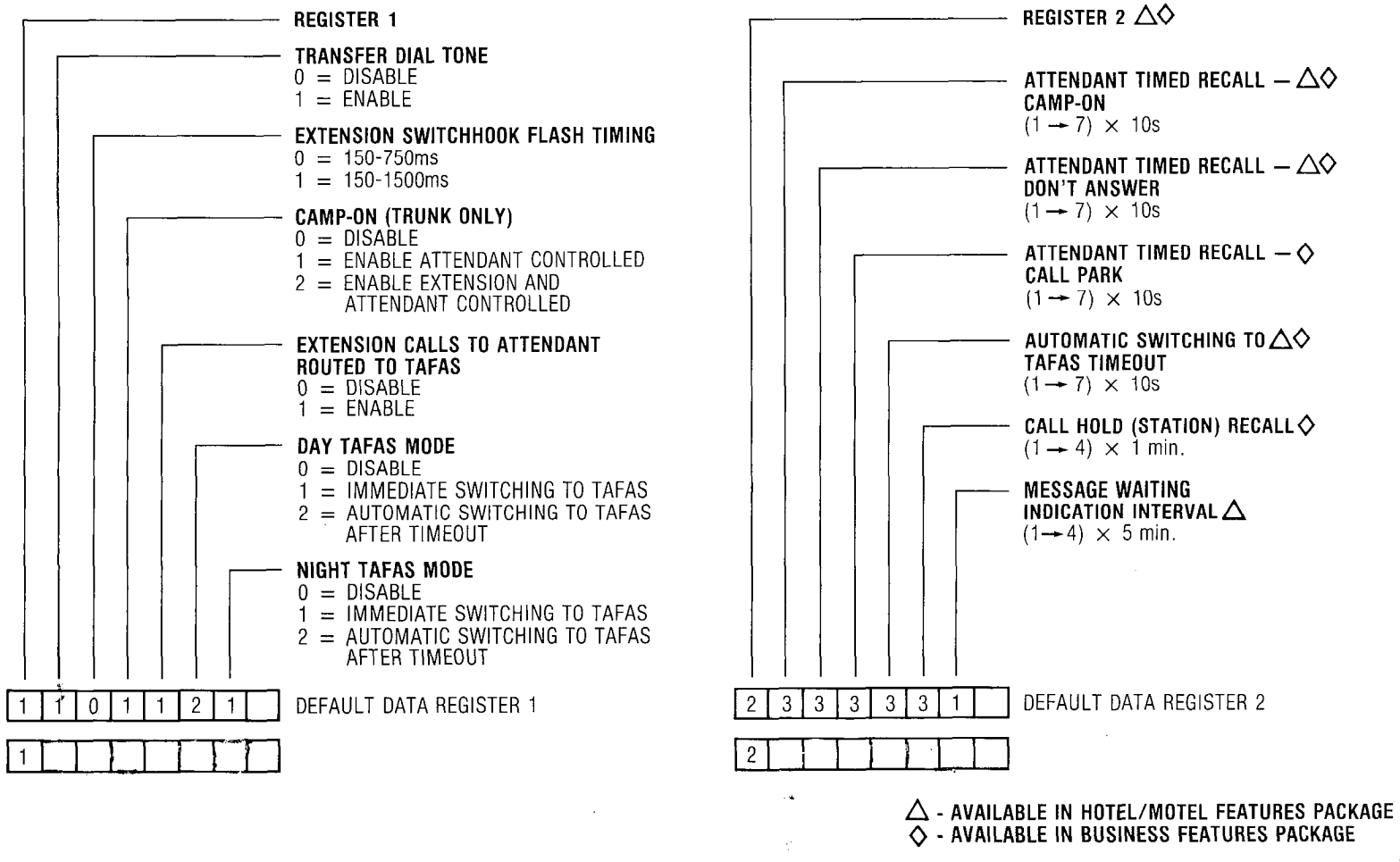

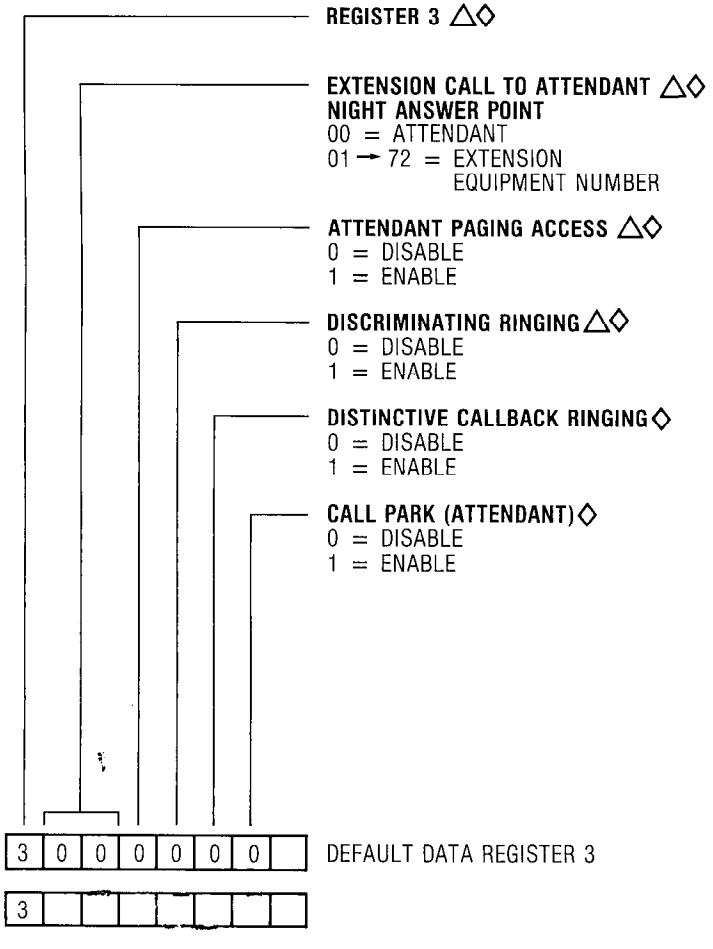

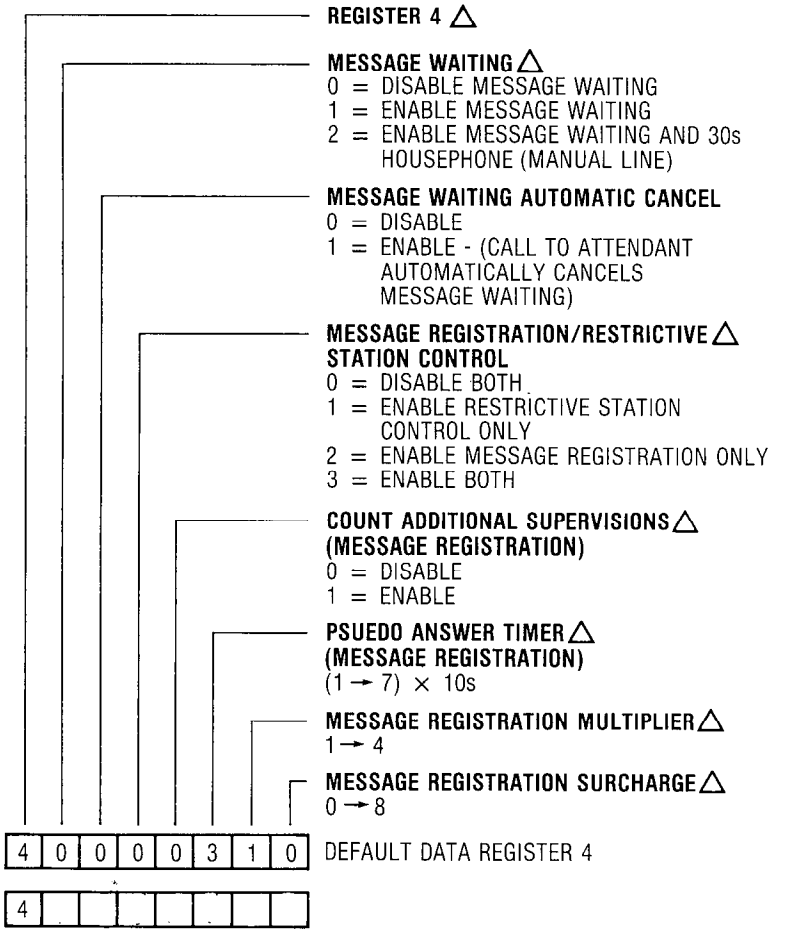

△ - AVAILABLE IN HOTEL/MOTEL FEATURES PACKAGE
◇ - AVAILABLE IN BUSINESS FEATURES PACKAGE

1619-2

SYSTEM OPTIONS PROGRAMMING FORM (COMMAND NUMBER 61) CONTINUED

(For detailed information refer to MITL9102-98-210, MAP210-003)

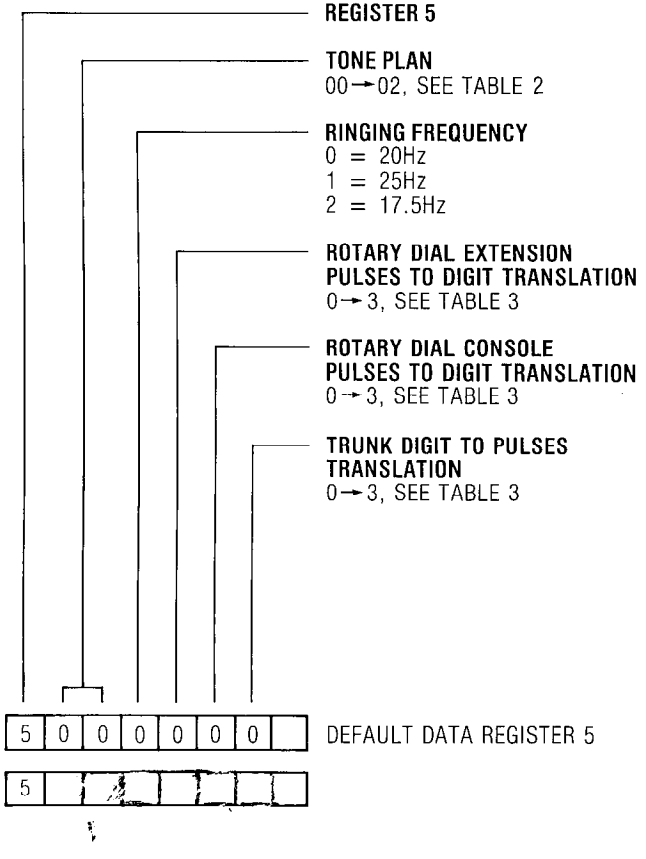

TABLE 2

Tone	Tone Plan 00	Tone Plan 01	Tone Plan 02
Dial Tone	350/440Hz Continuous	350/440Hz Continuous	400Hz Continuous
Busy Tone	480/620Hz 500ms On, 500ms Off Repeated continuously	400Hz 350ms On, 350ms Off Repeated continuously	400Hz 500ms On, 500ms Off Repeated continuously
Ringback Tone	440/480Hz 1s On, 3s Off Repeated continuously	400Hz 1s On, 3s Off Repeated continuously	400/450Hz 400ms On, 200ms Off 400ms On, 2s Off Repeated continuously
Reorder Tone	480/620Hz 250ms On, 250msOff Repeated continuously	400Hz Continuous	400Hz 250ms On, 250ms Off Repeated continuously
Camp-On Tone	440/480Hz Single burst of 200ms	400Hz Single burst of 200ms	400/450Hz Single burst of 200ms
Transfer Dial Tone	350/440Hz 100ms On, 100ms Off Repeated three times then continuous tone	350/440Hz 100ms On, 100ms Off Repeated three times then continuous tone	400Hz 100ms On, 100ms Off Repeated three times then continuous tone

TABLE 3

Translation Code	NUMBER OF PULSES 1	2	3	4	5	6	7	8	9	10	
0	1	2	3	4	5	6	7	8	9	0	DIGIT DIALED
1	0	1	2	3	4	5	6	7	8	9	
2	9	8	7	6	5	4	3	2	1	0	
3	0	9	8	7	6	5	4	3	2	1	

1657-1

FEATURE ACCESS CODE PROGRAMMING FORM (COMMAND NUMBER 62)

(For detailed information refer to MITL9102-98-210, MAP210-004)

CANNOT BE PROGRAMMED WITH BASIC FEATURES PACKAGE

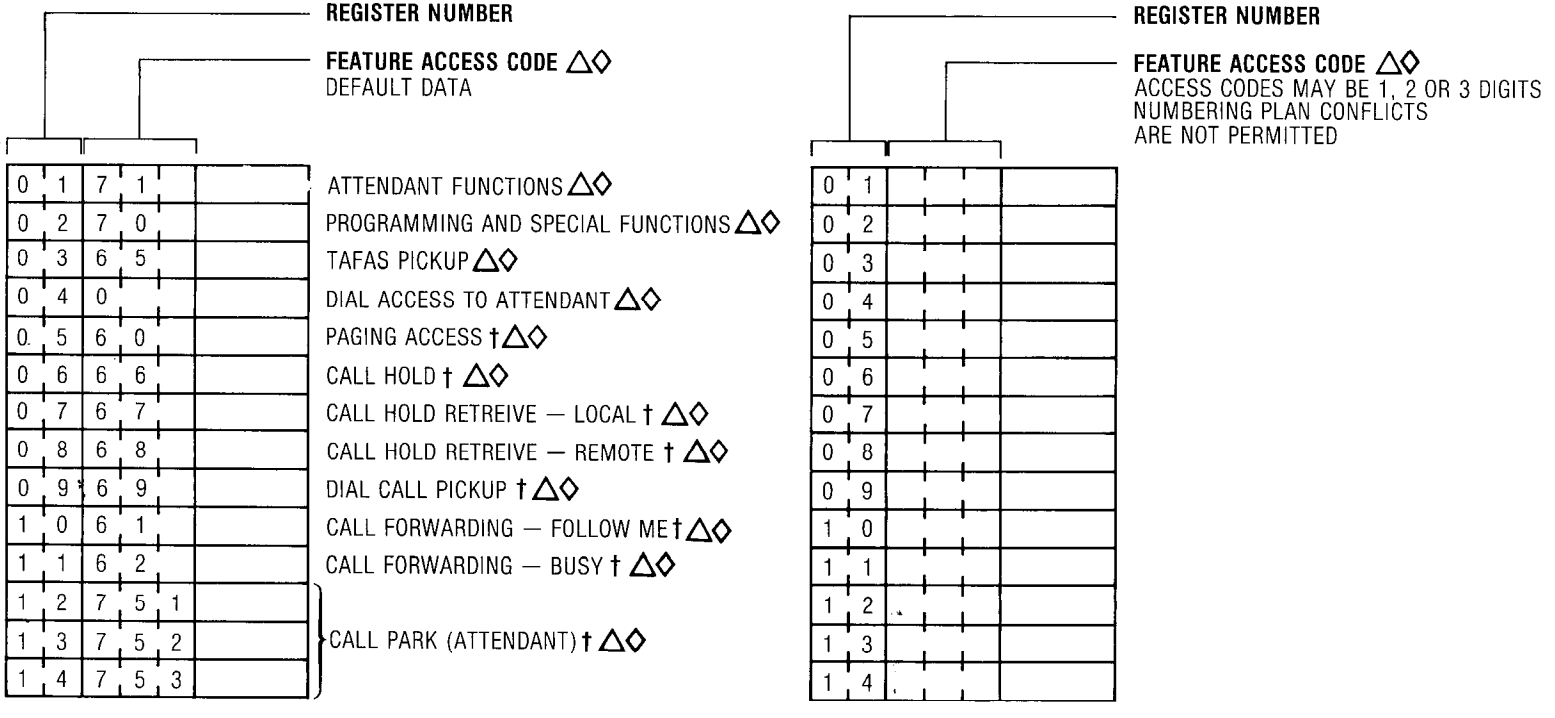

† These features can only be accessed in the Business Features package. Their access codes can be programmed in the Hotel/Motel package to avoid numbering conflicts.

△- AVAILABLE IN HOTEL/MOTEL FEATURES PACKAGE
◇- AVAILABLE IN BUSINESS FEATURES PACKAGE

1620 2

TOLL CONTROL PLAN 1 PROGRAMMING FORM (COMMAND NUMBER 63)

(For detailed information refer to MITL9102-98-210, MAP210-005)

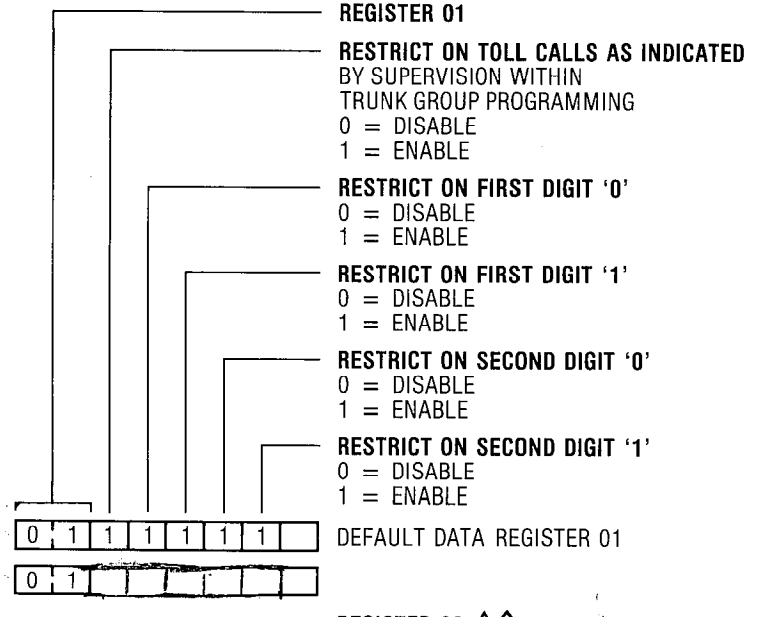

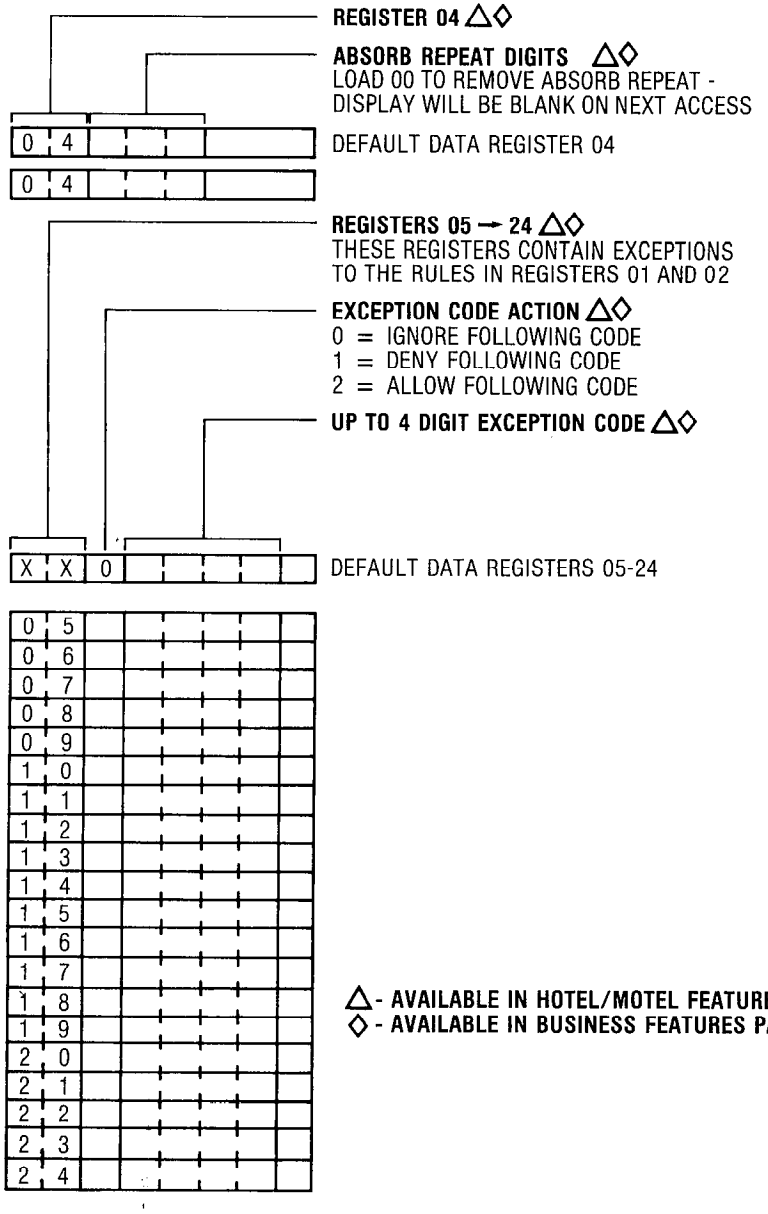

△ - AVAILABLE IN HOTEL/MOTEL FEATURES PACKAGE
◇ - AVAILABLE IN BUSINESS FEATURES PACKAGE

TOLL CONTROL PLAN 2 PROGRAMMING FORM (COMMAND NUMBER 64)

(For detailed information refer to MITL9102-98-210, MAP210-005)

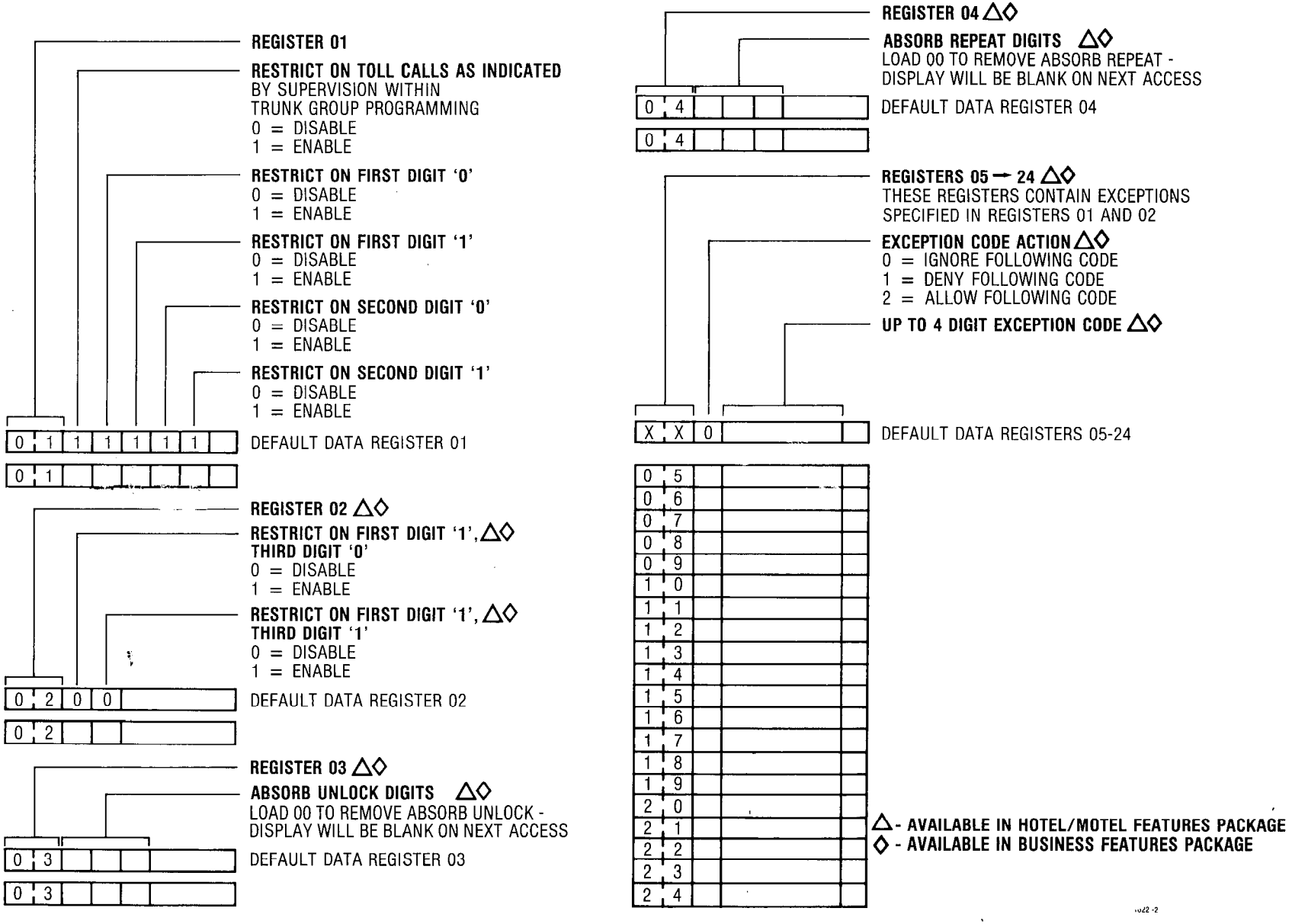

TRUNK GROUP PROGRAMMING FORM (COMMAND NUMBER 65)

(For detailed information refer to MITL9102-98-210, MAP210-006)

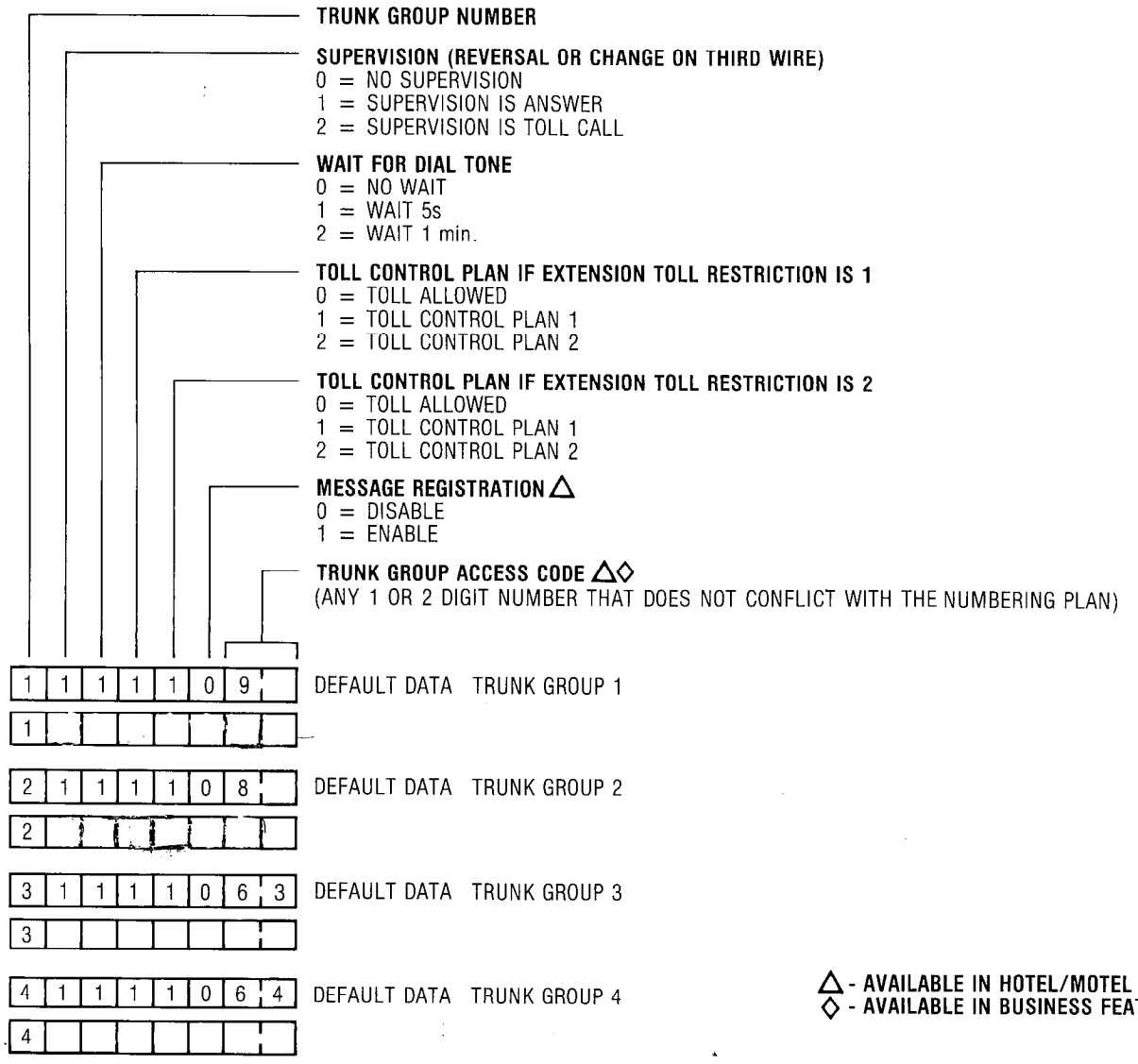

△ - AVAILABLE IN HOTEL/MOTEL FEATURES PACKAGE
◇ - AVAILABLE IN BUSINESS FEATURES PACKAGE

1623-2

TRUNK PROGRAMMING FORM (COMMAND NUMBER 66)

(For detailed information refer to MITL9102-98-210, MAP210-007)

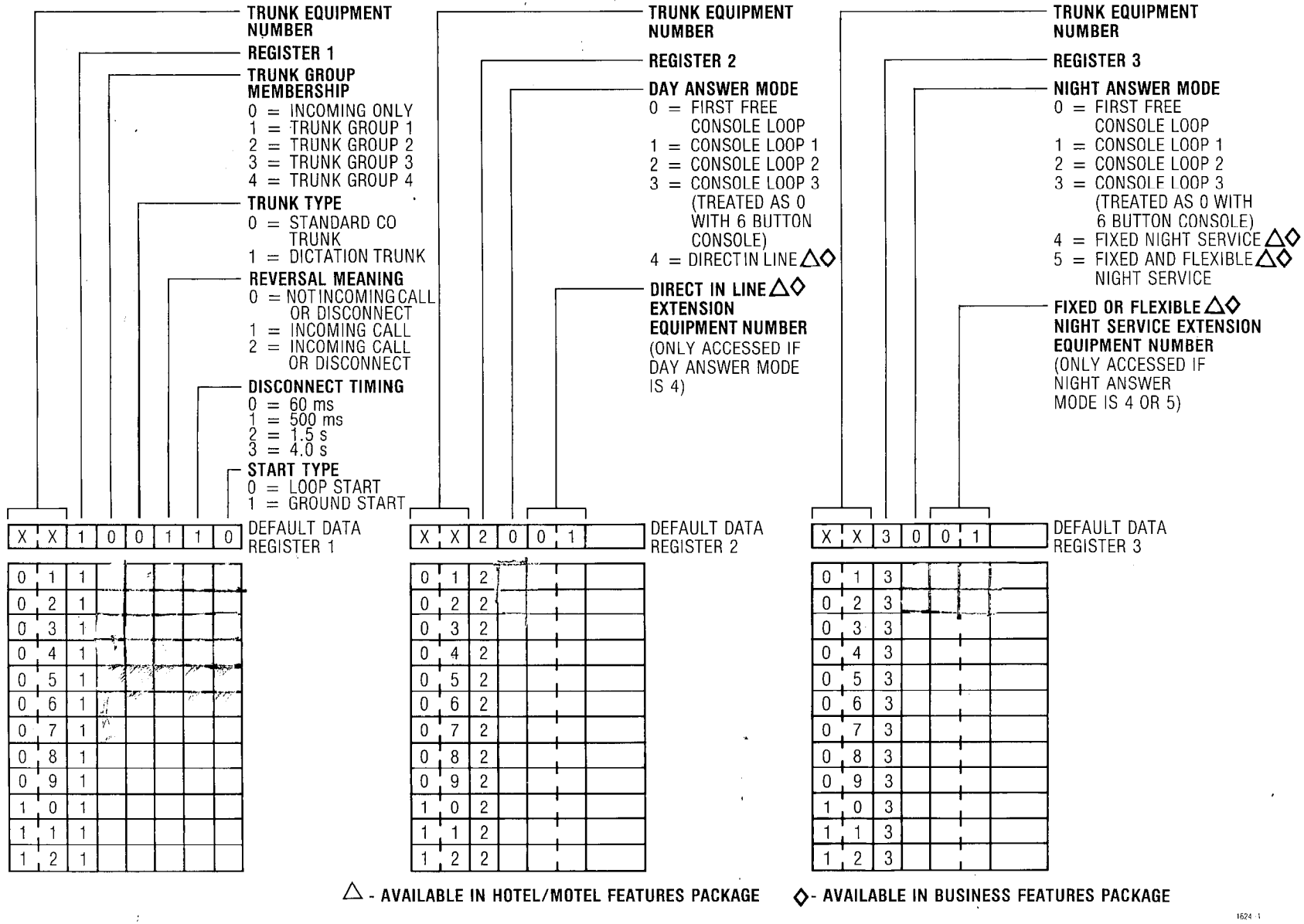

△ - AVAILABLE IN HOTEL/MOTEL FEATURES PACKAGE ◇- AVAILABLE IN BUSINESS FEATURES PACKAGE

1624

COS PROGRAMMING FORM (COMMAND NUMBER 67)

(For detailed information refer to MITL9102-98-210, MAP210-008)

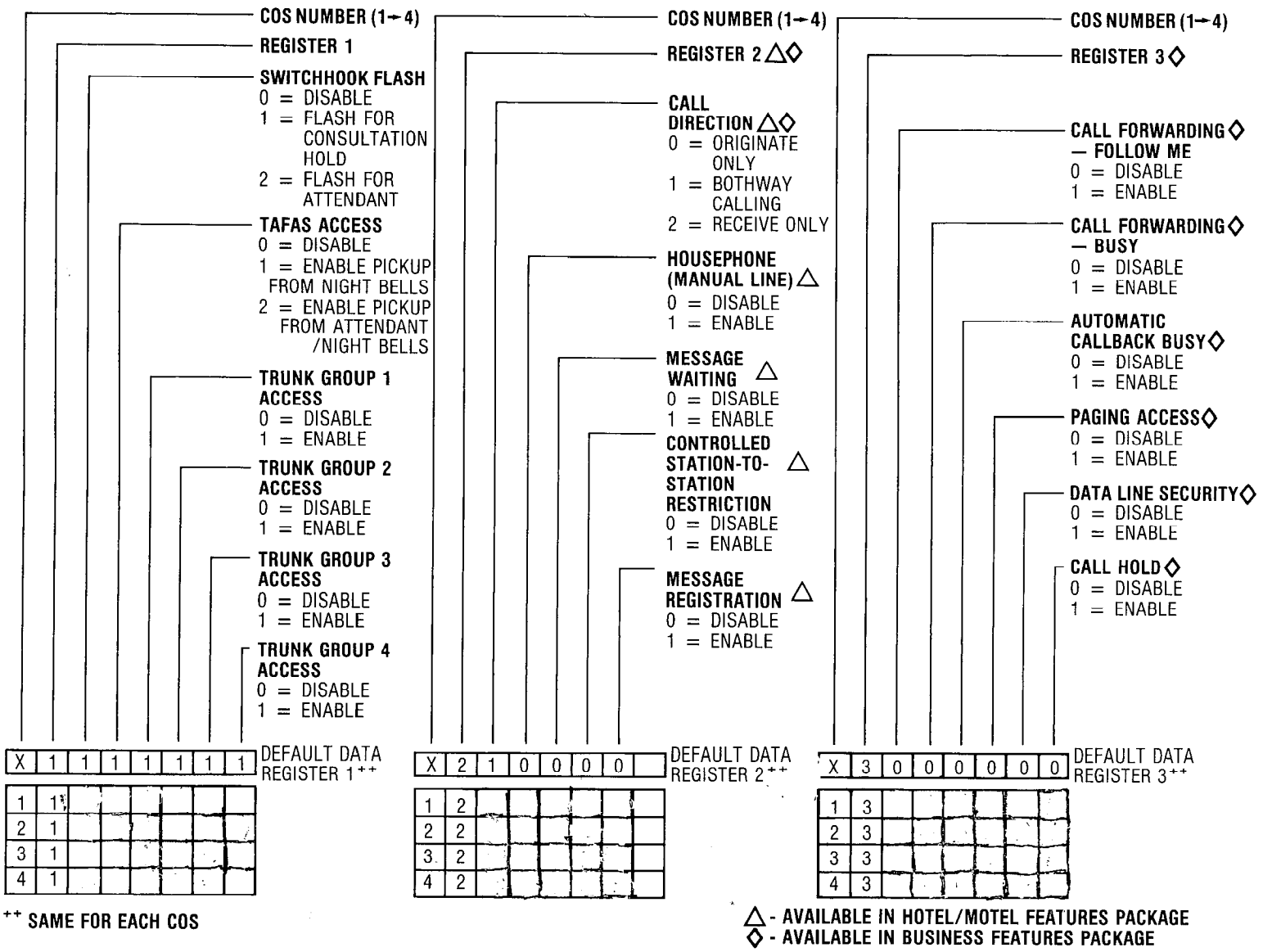

This page left blank.

EXTENSION PROGRAMMING FORM (COMMAND NUMBER 68)

(For detailed information refer to MITL9102-98-210, MAP210-009)

DEFAULT DATA

EQUIPMENT NUMBER
COS
TOLL RESTRICTION
PICKUP GROUP
EXTENSION NUMBER

0	1	0	1	0	1	1	0

COS — ALL EXTENSIONS ASSIGNED A COS OF 0 — ALL EXTENSIONS DISABLED

PICKUP GROUP — NO ASSIGNMENT

EXTENSION NUMBERS ASSIGNED SEQUENTIALLY TO EQUIPMENT NUMBERS

3 DIGIT NUMBERING PLAN
EXTENSION NUMBER 110 ASSIGNED TO EQUIPMENT NUMBER 01 - THROUGH TO EXTENSION NUMBER 181 ASSIGNED TO EQUIPMENT NUMBER 72

2 DIGIT NUMBERING PLAN
EXTENSION NUMBER 10 ASSIGNED TO EQUIPMENT NUMBER 01 - THROUGH TO EXTENSION NUMBER 59 ASSIGNED TO EQUIPMENT NUMBER 50

TRUNK GROUP TOLL RESTRICTION DATA

(COPIED FROM TRUNK GROUP PROGRAMMING FORM)

TOLL CONTROL PLAN IF EXTENSION TOLL RESTRICTION IS 1
0 = TOLL ALLOWED
1 = TOLL CONTROL PLAN 1
2 = TOLL CONTROL PLAN 2

TOLL CONTROL PLAN IF EXTENSION TOLL RESTRICTION IS 2
0 = TOLL ALLOWED
1 = TOLL CONTROL PLAN 1
2 = TOLL CONTROL PLAN 2

	TRUNK GROUP 1
	TRUNK GROUP 2
	TRUNK GROUP 3
	TRUNK GROUP 4

EQUIPMENT NUMBER

COS
0 = EXTENSION DISABLED
1 → 4 = COS 1 → 4

TOLL RESTRICTION
0 = TOLL ALLOWED
1 = TOLL RESTRICTION 1
2 = TOLL RESTRICTION 2

PICKUP GROUP◇
0 = NO PICKUP GROUP
1 → 7 = PICKUP GROUPS 1 → 7

EXTENSION NUMBER△◇
1, 2 OR 3 DIGIT NUMBERING, NUMBERING — CONFLICTS NOT PERMITTED.

| | | |

EXTENSION NUMBERING — BLOCK PROGRAMMING FORM (COMMAND NUMBER 69)

(For detailed information refer to MITL9102-98-210, MAP210-010)

CANNOT BE PROGRAMMED IN BASIC FEATURES PACKAGE

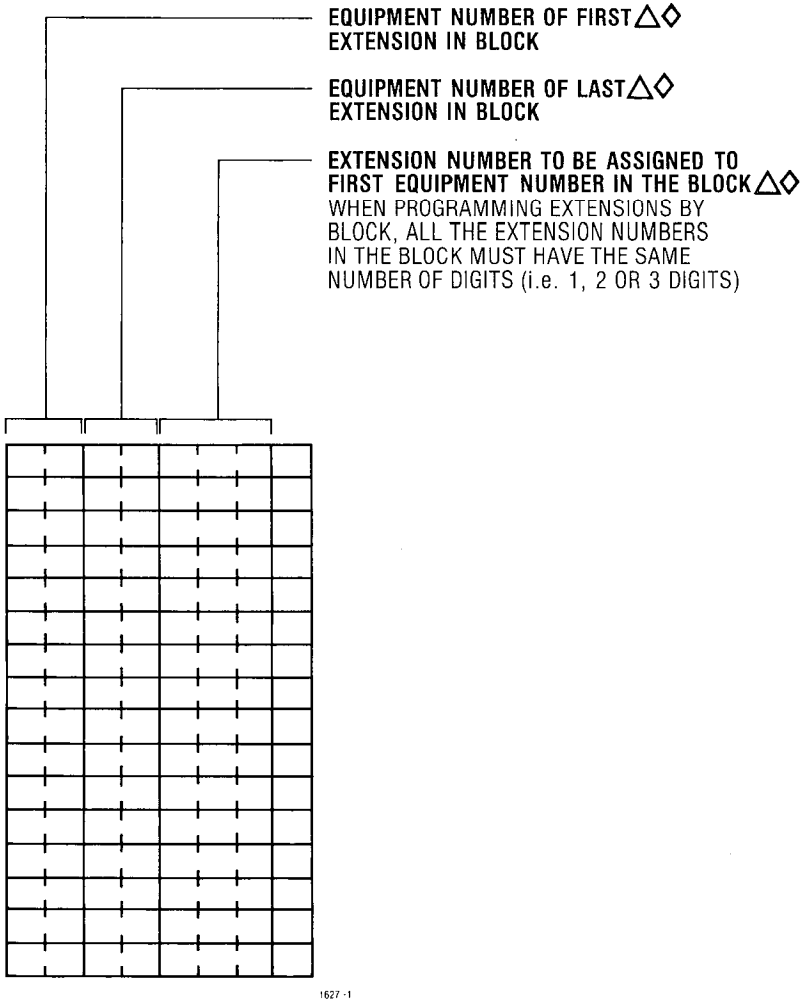

EXTENSION COS, TOLL RESTRICTION AND PICKUP GROUP — BLOCK PROGRAMMING FORM (COMMAND NUMBER 70)

(For detailed information refer to MITL9102-98-210, MAP210-011)

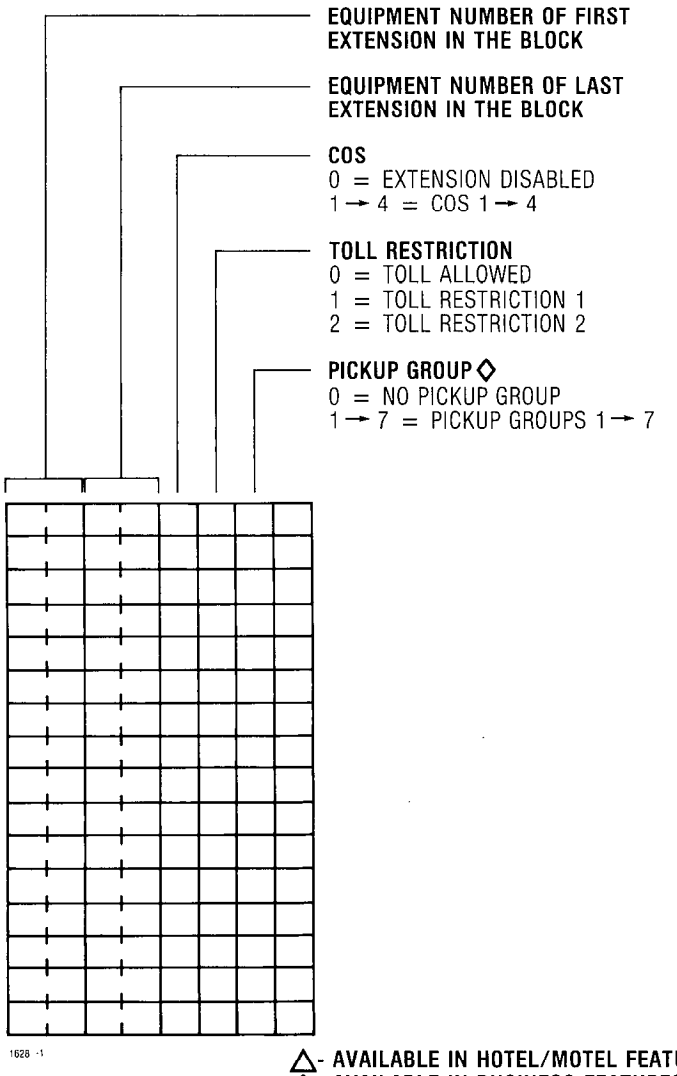

△- AVAILABLE IN HOTEL/MOTEL FEATURES PACKAGE
◇- AVAILABLE IN BUSINESS FEATURES PACKAGE

BUSY LAMP FIELD (REMOTE DISPLAY) PROGRAMMING FORM (COMMAND NUMBER 71)

(For detailed information refer to MITL9102-98-210, MAP210-012)

CANNOT BE PROGRAMMED IN BASIC FEATURES PACKAGE

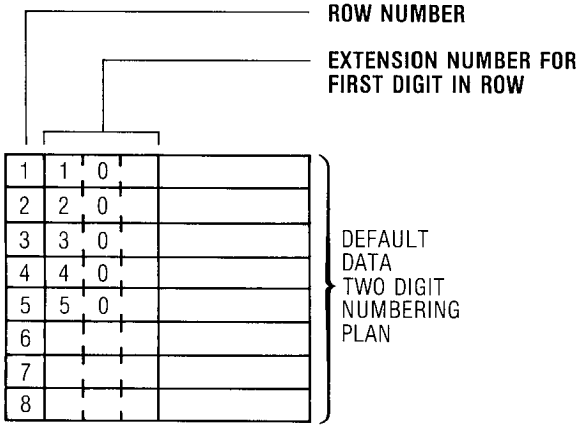

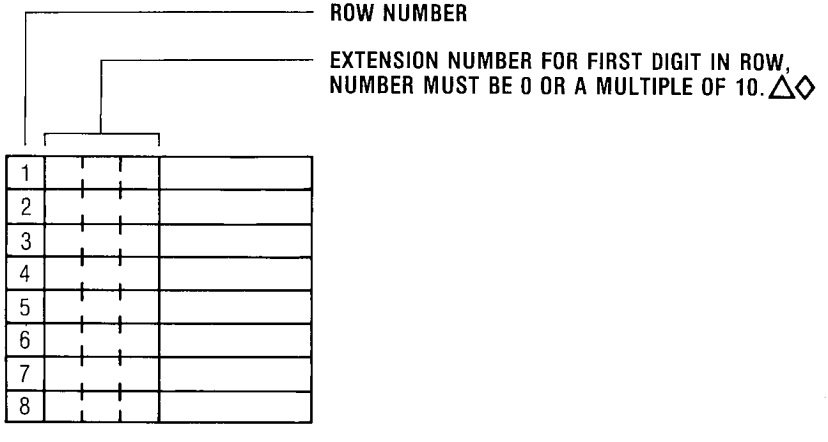

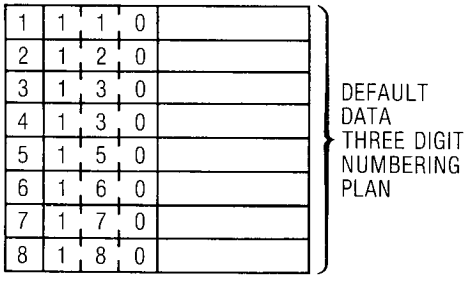

△ - AVAILABLE IN HOTEL/MOTEL FEATURES PACKAGE
◇ - AVAILABLE IN BUSINESS FEATURES PACKAGE

1629

SX-20™
COMMUNICATIONS SYSTEM
SYSTEM PROGRAMMING

1. GENERAL

1.001 This addendum supplements Section MITL9102-98-210, Issue 1, June 1980. Place this pink sheet ahead of the section.

1.002 This addendum is issued to correct an error in Part 4 Mitel Action Procedures of the section.

2. CHANGES TO SECTION

2.01 On Page 8, forth bullet on right hand side, change

- to exit from the selected command mode,

to read

- to exit from the selected programming mode and enter the command mode,

A to Z KELLATRONICS, Inc.

Tel: 800.766.3425
email: info@kellatronics.com Fax: 818.773.8899

SX-20™
COMMUNICATIONS SYSTEM
SYSTEM PROGRAMMING

CONTENTS PAGE

1. INTRODUCTION 1

General 1

2. PROGRAMMING 2

General 2
Programming Forms 3
Programming Display 3
Data Input 4
Control Operations 4
Program or Command Mode Entry 5
Data Entry 5
Command Mode Reentry 5
Exit from the Programming or Command Mode 6

3. PROGRAMMING ERRORS 6

General 6
Incorrect Data Entry 6
Corrupted or Out of Range Data 6
Exit from the Error Mode 6

4. MITEL ACTION PROCEDURES 7

Enter Programming Mode
MAP210-001 9
Load and Check Default Data
MAP210-002 11
Systems Options Programming
MAP210-003 13
Feature Access Code
MAP210-004 25
Toll Control Plan Programming
MAP210-005 27
Trunk Group Programming
MAP210-006 36
Trunk Programming
MAP210-007 39
COS Programming
MAP210-008 45
Extension Programming
MAP210-009 53
Extension Numbering - Block Programming
MAP210-010 57
Extension COS, Toll Restriction and Pickup Group - Block Programmming
MAP210-011 59
Busy Lamp Field Programming
MAP210-012 61
Programming Error Detected by the Programmer
MAP210-050 63
Programming Error Detected by the System
MAP210-051 65

1. INTRODUCTION

General

1.01 The SX-20 is a processor controlled communications system. In order for the system to process calls the central processor unit needs to know certain information about the called and calling equipment. This information is held in registers in the system memory. When power is first applied to the system the registers must be filled with known data. This data is known as the Default Data and is the same for all systems. After the Default Data has been loaded (see MAP210-002) it may be changed, using the Attendant Console or Test Line, to reflect individual customer requirements. These changes are made using the programs explained in this practice and the Programming Forms, contained in Section MITL9102-98-205.

TABLE 1-1
DEFAULT NUMBERING PLAN

Code Assignment	Function
0	- Console Access
10-59	- 2 Digit Extension Numbering
110-181	- 3 Digit Extension Numbering
60	- Pager
61	- Call Forwarding - Follow Me
62	- Call Forwarding - Busy
63	- Trunk Group 3 Access

© MITEL Corporation 1980

™ Trademark of MITEL Corporation

TABLE 1-1 (CONT'D)
DEFAULT NUMBERING PLAN

Code Assignment	Function
64	- Trunk Group 4 Access
65	- TAFAS Pickup
66	- Call Hold
67	- Call Hold Retrieve (Local)
68	- Call Hold Retrieve (Remote)
69	- Dial Call Pickup
70	- Programming and Special Functions
71	- Attendant Functions
751	- Call Park Access
752	- Call Park Access
753	- Call Park Access
8	- Trunk Group 2 Access
9	- Trunk Group 1 Access

2. PROGRAMMING

General

2.01 Programming is based on two modes, the command mode and the data mode. In the command mode a command number is entered that indicates the type of programming (e.g. trunks, extensions, etc.) to be performed. In the data mode the data is entered for the chosen programming type.

2.02 Programming consists of completing the required programming forms, see Section MITL9102-98-205, and entering the data into the system. Their are eleven different Command Numbers each defining a different program type and allowing a different aspect of the configuration to be entered into the system memories.

- **System Options Programming (Command Number 61)** - defines the options that may be enabled on a system wide basis.
- **Feature Access Codes (Command Number 62)** - a number of features in the system have special access codes. These codes may be programmed in the Hotel/Motel and Business features packages. In the basic features package the feature access codes are assigned by the system and are as shown in the Default Numbering Plan, Table 1-1.
- **Toll Control Plan Programming (Command Numbers 63 and 64)** - the SX-20 allows two independant Toll Control Plans to be specified. Command Number 63 provides access to Toll Control Plan 1 and Command Number 64 access to Control Plan 2.
- **Trunk Group Programming (Command Number 65)** - a maximum of four individual Trunk Groups may be programmed within each system. This command allows the parameters for each individual trunk group to be entered.
- **Trunk Programming (Command Number 66)** - this program allows each customer to specify the types of trunks employed in the system, their characteristics, and the day and night answer modes (e.g. console or extension)
- **Class-of-Service (COS) Programming (Command Number 67)** - each SX-20 can accomodate up to four different Classes-of-Service. Each COS details which features may be accessed by stations assigned that COS.
- **Extension Programming (Command Number 68)** - each extension in the system may be programmed with a specific COS, Toll Restriction, Pickup Group (Business features only) and extension number (Hotel/Motel and Business features only).
- **Extension Numbering - Block Programming (Command Number 69)** - where it is desireable to assign sequential extension numbers to sequential extension equipment numbers (i.e. a block of extensions), block programming may be used. In this case a block of numbers is assigned in the time taken to program an individual extension.
- **Extension COS, Toll Restriction and Pickup Group - Block Programming (Command Number 70)** - this program allows the same COS, Toll Restriction and Pickup Group access to be assigned to a block of extension equipment numbers.

- **Busy Lamp Field (Remote Display) Programming (Command Number 71)** - in the Hotel/Motel and Business features packages the extension numbers displayed on the Busy Lamp Field (of the Remote Display) may be programmed. Command Number 71 allows the extension number (0 or a multiple of 10) assigned to the first lamp in each row of the Busy Lamp Field to be specified.

Programming Forms

2.03 Section MITL9102-98-205 contains the programming forms associated with each of the system programs. Each form specifies the codes that are to be entered for each of the features or options, and also shows the default data associated with each register. To complete each form enter the required code in the space provided. Programming then consists of entering the codes exactly as shown on the programming forms.

Data Input

2.04 Programming of the SX-20 may be performed from either the Attendant Console or the Test Line (but not both simultaneously). The extension with equipment number 01 acts as the Test Line when switch 6 on the CPU card is set to OPEN, see Fig. 2-1. If the Test Line is used to program the system the data entered is displayed on the Cabinet Call Status Display only. This allows the attendant to process calls normally using a Remote Call Status Display. If however, the Attendant Console is used to program the system, attendant call processing is terminated, and both displays show the programming data.

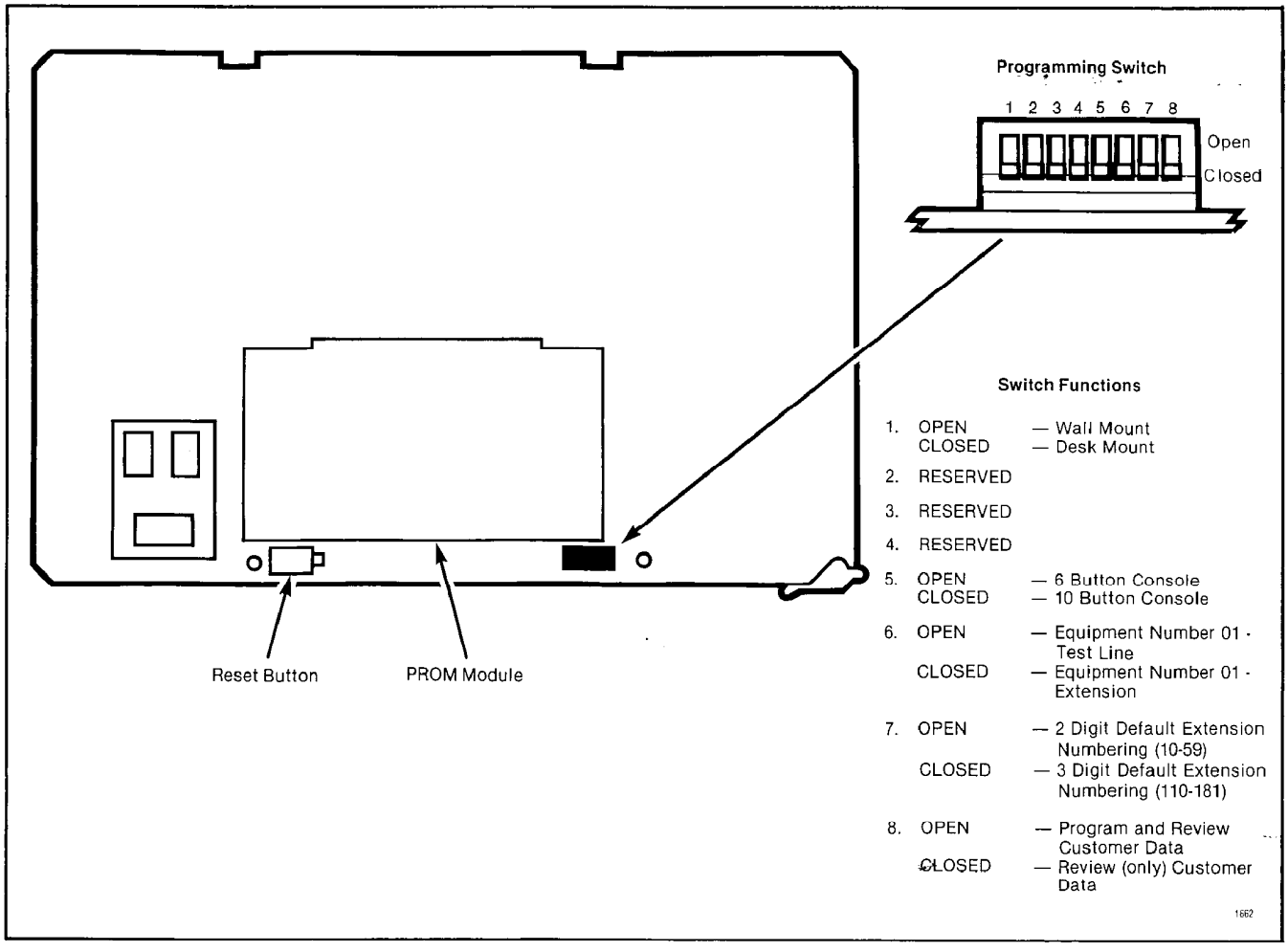

Fig. 2-1 CPU Card

Programming Display

2.05 The eight digit numerical display operates in an interactive manner such that the number of digits flashing indicates the size of that particular field. The next action/digit input will cause a change to the field that is flashing.

- If a single digit field is flashing the next digit dialed will overwrite the flashing digit.

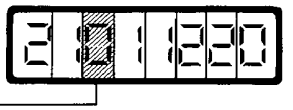

Next digit entered will overwrite flashing digit

- If two digits at the start of the display are flashing the field is an equipment number or a register number.
  eg. equipment number

The first digit entered will overwrite this digit

Programmed data for equipment number 31

Dial first digit of equipment number.

Next digit entered will overwrite this digit

Field blank because the equipment number has to be fully loaded to be valid

Dial second digit of equipment number.

Next digit will overwrite this digit

Programmed data for equipment number 35

- If 2 or 3 digits in the display, other than in segments 1 and 2, are flashing, the field is an extension number or an access code.

Next digit will overwrite this digit

Dial first digit of extension number or access code.

Reset of Field blanks to permit use of 1, 2 or 3 digit numbering

Dial remaining digits in extension number or access code.

Note: (1) If it is necessary to blank an extension number or access code dial 00, this is particularly useful to prevent numbering plan conflicts.

(2) All data up to the last digit to be changed must be entered.

- If a P is displayed it indicates that the system is in programming command mode. If the command number is flashing it may be changed.

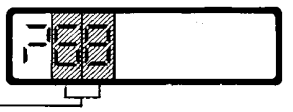

Command Number

Control Operations

2.06 System Programming may be performed from the Attendant Console or the Test Line using either a rotary dial or DTMF telephone set. Control operations are provided by each type of set as follows:

- **ENTER/NEXT**—To transfer the data entered into a register to the system memory or to step to the next register within a program press the * key on a DTMF set, or flash the switchhook once on a rotary set.

- **RESET DISPLAY**—If during programming an error is made, (eg. misdialed digit) and is detected by the programmer, pressing the # key on a DTMF set will cause a reset to the start of the register without changing the original data. If a Rotary set is used, it is necessary to complete the data entry for the register, reselect the register, and enter the correct data.

- **EXIT FROM ERROR MODE**—The SX-20 can detect certain errors made during programming, see Part 3. To exit from the error mode dial # from a DTMF set or flash the switchhook twice on a rotary set. The system will return to the start of the register being displayed when the error occurred and show the original data.

Default Data

2.07 The Default Data loads the system with the numbering plan of the basic features package and a commonly used set of customer options. The MAP210-002 shows how to load and check the Default Data.

Program Mode Entry

2.08 The Programming Mode is entered by dialing the required Programming and Special Function Access Code, see MAP210-001. Switch 8 on the CPU card must be set to OPEN to program the system and set to CLOSED to review data, see Fig. 1. When the system enters programming it does so in the command mode and the eight segment display shows PG 1, ie. the command number for System Options. The code 61 flashes indicating that it may be changed to any desired command number, see Table 2-1. After the required command number has been selected * is dialed from a DTMF set or the switchhook flashed on a rotary set and the data mode is entered.

Data Entry

2.09 Associated with each program (command) type are a number of registers describing the parameters specified. The data in these registers may be changed to reflect the requirements of each individual customer by dialing codes from the console or test line. As data is entered it is left justified on the system display and placed in temporary storage. After all data has been entered for a selected register it may be transfered from temporary storage to permanent storage by dialing * from a DTMF set or flashing the switchhook on a rotary set. A description of the data entry for each command number is given in MAP210-003 through MAP210-012.

TABLE 2-1
COMMAND NUMBER

Programming and Special Function Command Numbers	
Command Number	**Programs**
61	- System Options Programming
62	- Feature Access Codes Programming
63	- Toll Control Plan 1 Programming
64	- Toll Control Plan 2 Programming
65	- Trunk Group Programming
66	- Trunk Programming
67	- Class-of-Service Programming
68	- Extension Programming
69	- Extension Numbering - Block Programming
70	- Extension COS, Toll Restriction and Pickup Group - Block Programming
71	- Busy Lamp Field (Remote Display) Programming
* 90	- Status Display Function - Trunk
* 91	- Status Display Function - Extension
* 92	- Status Display Function - System
* 99	- Display Software Identity
* See Troubleshooting MITL9102-98-350	

1664-1

Command Mode Re-entry

2.10 After all data has been entered for the selected command, and the data transfered to permanent storage, the command mode may be re-entered as follows:

(a) if segment one ONLY of the display is flashing dial 0.

(b) if segments one AND two of the display are flashing dial 00.

Exit from the Programming Mode

2.11 To exit from the programming mode, ie. after all data has been entered or reviewed, press the RELEASE button on the attendant console or replace the handset.

3. PROGRAMMING ERRORS

General

3.01 During programming two types of error detection operate:

- incorrect data entry detected by the person programming the system
- incorrect data entry detected by the system.

Incorrect Data Entry Detected by the Programmer

3.02 If during programming an incorrect entry is made, the data entered for that register, and held in temporary storage, may be erased and the register restored to its original contents by pressing the # key on a DTMF set. If a rotary set is being used to program the system it is necessary to complete the data entry for that register, reselect the register and enter the correct data (see MAP210-050).

Incorrect Data Entry Detected by the System

3.03 During programming the SX-20 continuously checks all data entered into the system. If an error is detected an error code is shown in position one, two and three of the display and the current command number in positions six, seven and eight (see MAP210-051). The meaning of each error code is detailed in Table 3-1.

Exit From the Error Mode

3.04 After the error code has been checked and the correct data determined, dial # from a DTMF set or flash the switchhook twice on a rotary set. The system will return to the start of the data displayed when the error occurred and show the original data, see MAP210-051.

TABLE 3-1 ERROR CODES

Error Code	Function
E01	Illegal Command Number entered
E02	Digit (0-9) dialed while error code was being displayed
E03	Number (Access Code) already exists, ie. Numbering Plan conflict
E04	Data out of range
E05	Extension number entered has too many digits
E06	Illegal extension number block. When programming extension numbers by block, all the extension numbers in the block must have the same number of digits (ie. 1, 2, or 3 digits)
E07	Too many digits dialed
E08	Illegal range of equipment numbers used in block programming (eg. 40-25)
E09	Command number entered is protected, set switch 8 on the CPU card to OPEN to proceed (see Fig. 2-1)
E10	Command or data accessed is not available in this features package
E11	Data entered is protected, set switch 8 on the CPU card to OPEN to proceed
E12	Data field incomplete - enter all data for field that was flashing
E13	Extension number for first digit in the row on the busy lamp field of the Remote Display must be 0 or a multiple of 10.

1663-1

4. MITEL ACTION PROCEDURES

General

4.01 This part details the procedures to be used when programming the SX-20 using Mitel Action Procedures (MAP's). The procedures use the flowchart principle showing the action to be performed down the center of the page, the parameters that may be input for each step on the left of the page and the resulting display on the right of the page.

MAP Symbols

4.02 Only three symbols are employed in the SX-20 MAPs.

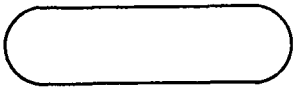

This symbol can perform three functions. It is used to indicate the start and finish points of a MAP and also used to indicate a jump to point within a MAP.

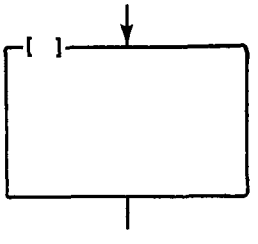

This symbol is used to indicate an action to be performed.

The number in top right corner of the box indicates the step number and the text within box details the action.

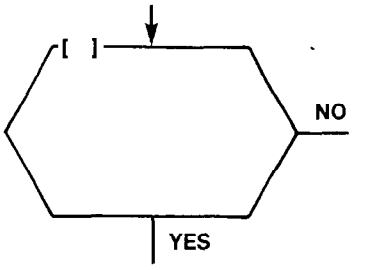

This symbol indicates that a decision must be made based on the information centered within the box. The branch taken when exiting from the decision block being the answer to the decision.

Programming Sequence

4.03 Table 4-1 lists the sequence in which the SX-20 should be programmed.

TABLE 4-1
PROGRAMMING SEQUENCE

Order	Program
1	- System Options Programming
2	- Feature Access Codes Programming
3	- Toll Control Plan 1 Programming
4	- Toll Control Plan 2 Programming
5	- Trunk Group Programming
6	- Trunk Programming
7	- Class-of-Service Programming
8	- Extension Programming
9	- Extension Numbering - Block Programming
10	- Extension COS, Toll Restriction, and Pickup Group - Block Programming
11	- Busy Lamp Field (Remote Display) Programming

Remember

- if programming from the Test Line use the cabinet display, if programming from the console the remote display may also be used
- to select the Test Line set switch 6 to OPEN
- to program the system set switch 8 to OPEN
- to enter data and/or display the next register dial * or flash switchhook
- error detected by the programmer: dial # to retain the original contents of the register; with a rotary, set enter error and rewrite with correct data
- error detected by the system: see Part 3 and MAP210-051
- the digit(s) dialed changes the flashing digit(s), shown shaded in this manual
- all data upto the last digit to be changed MUST be entered
- to exit from the selected command mode, dial 0 only if the first digit in the register is flashing, or 00 only if the first two digits are flashing
- after programming is completed, set switch 8 to CLOSED - system operation normal, data may be reviewed
- to exit from the programming mode, press RELEASE key (on console) or replace handset

ENTER PROGRAMMING MODE
MAP210-001
Issue 1, May 1980
Sheet 1 of 2

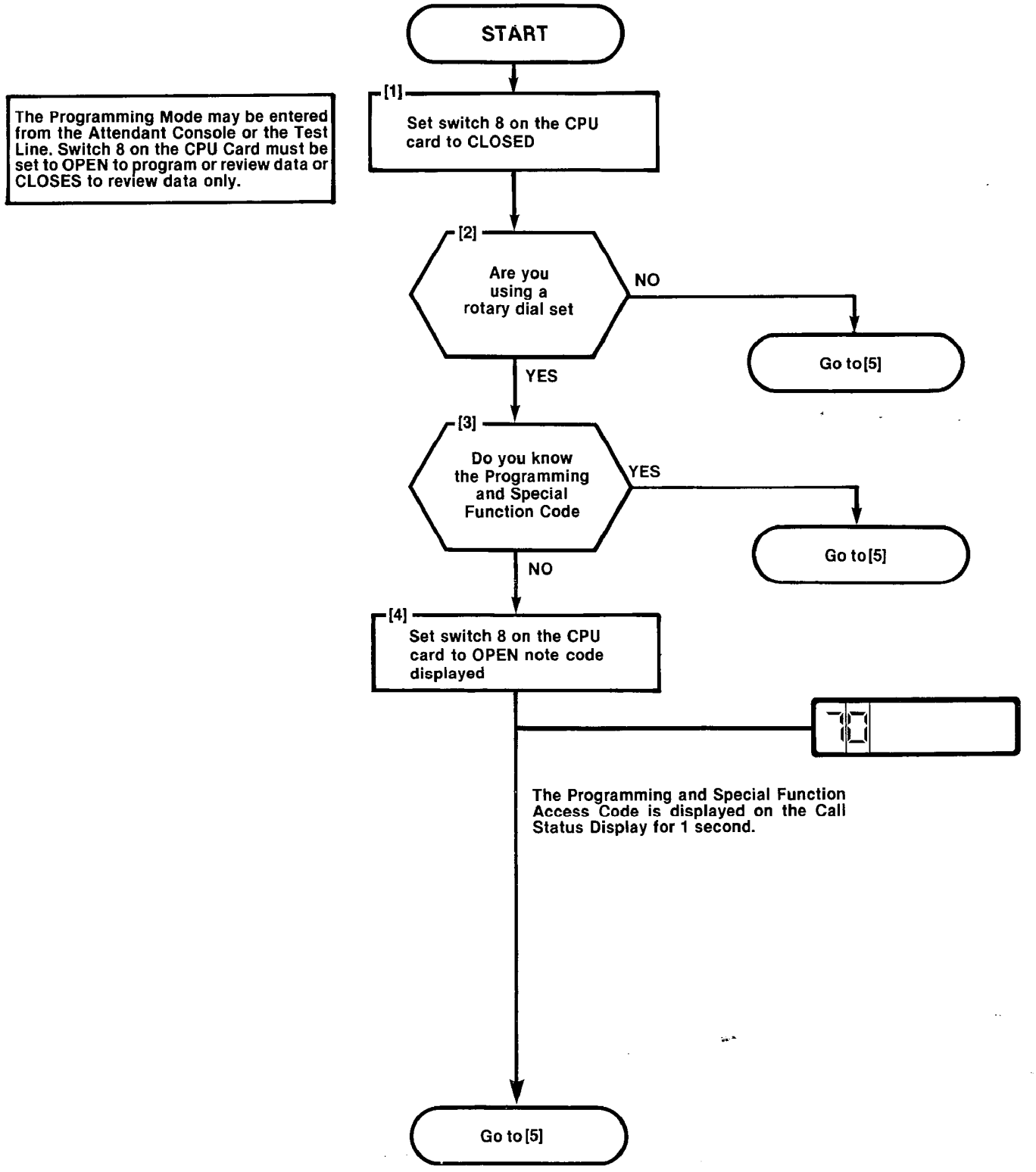

ENTER PROGRAMMING MODE
MAP210-001
Issue 1, May 1980
Sheet 2 of 2

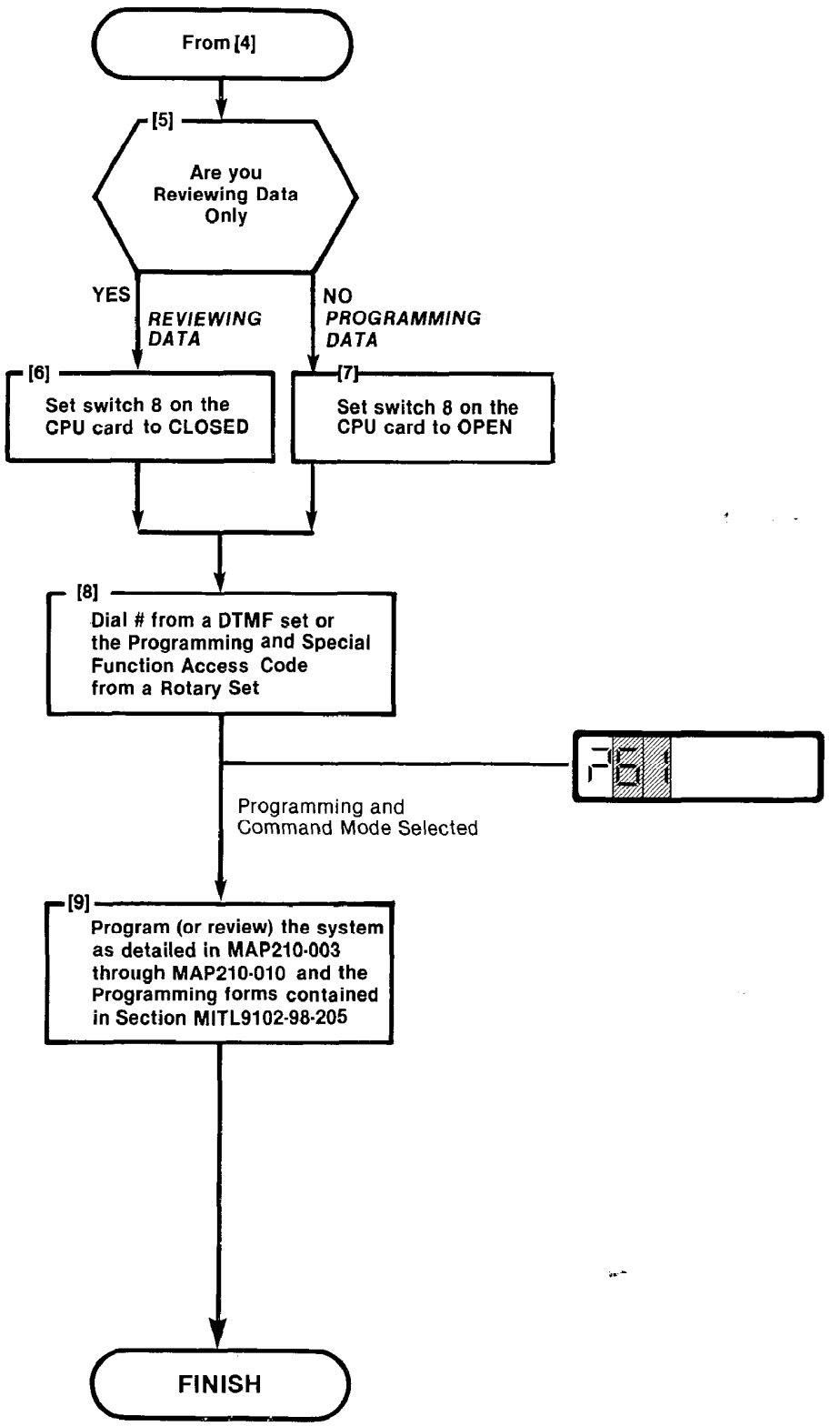

LOAD AND CHECK DEFAULT DATA
MAP210-002
Issue 1, May 1980
Sheet 1 of 2

LOAD AND CHECK DEFAULT DATA

When an SX-20 is first powered-up, the Default Data must be loaded. This data puts the system into a defined state with the basic features package numbering plan and a commonly used set of customer data. The Default Data is the same for every features package. After this data has been loaded, it may be changed to reflect individual customer's requirements.

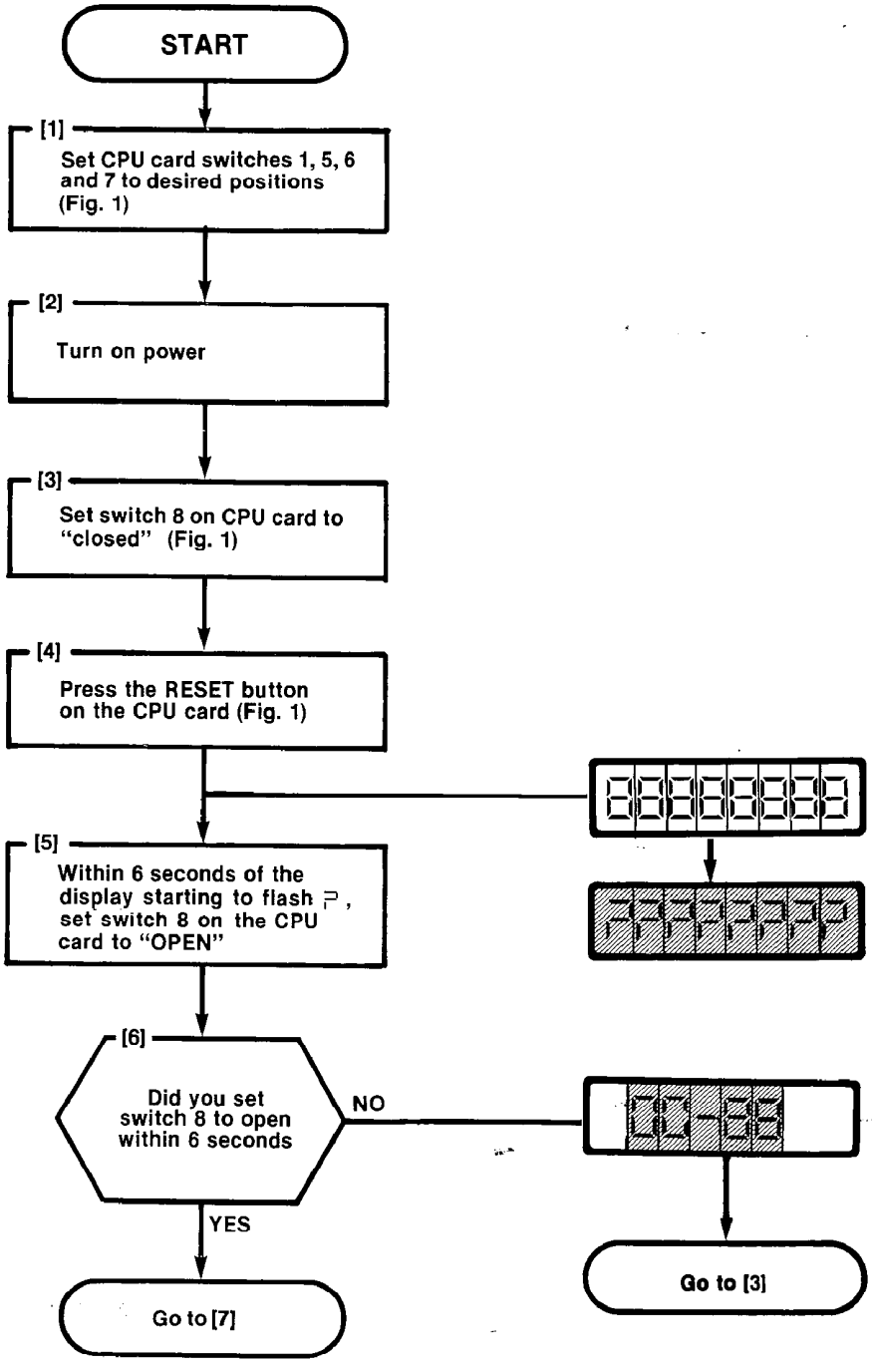

LOAD AND CHECK DEFAULT DATA
MAP210-002
Issue 1, May 1980
Sheet 2 of 2

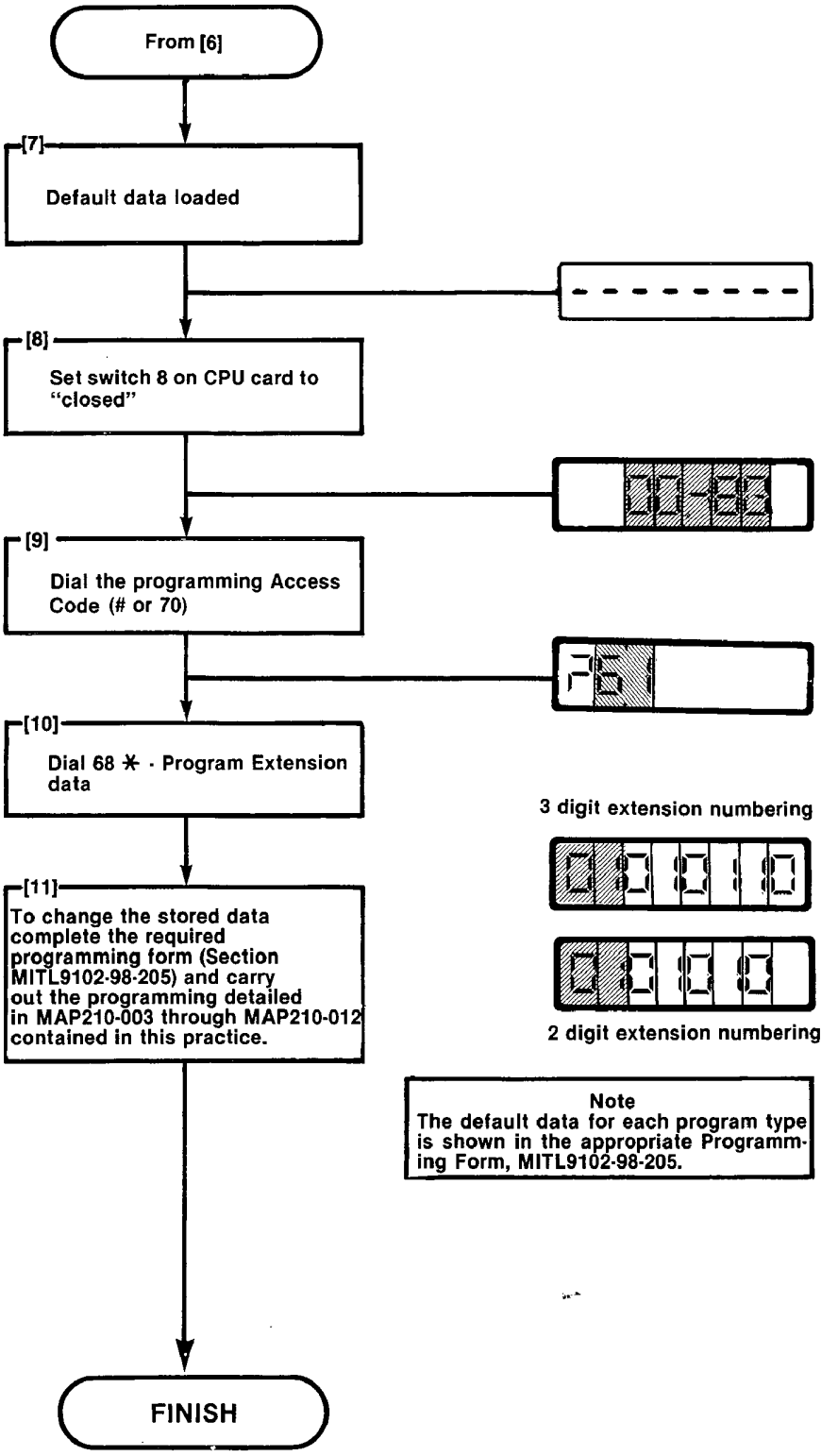

SYSTEM OPTIONS PROGRAMMING
MAP210-003
Issue 1, May 1980
Sheet 1 of 11

System Options Programming (Command Number 61) - defines the options that may be enabled on a system wide basis.

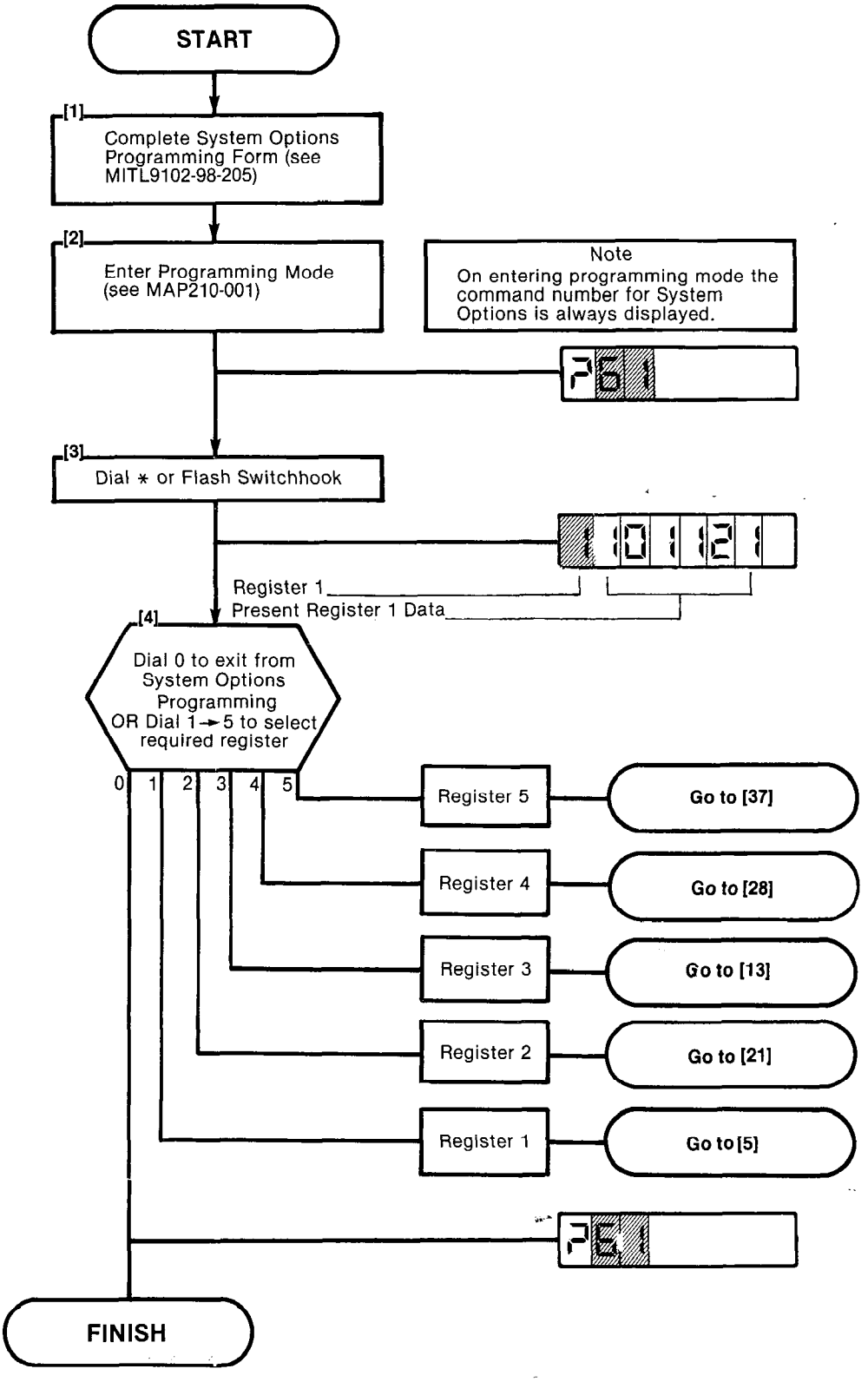

SYSTEM OPTIONS PROGRAMMING
MAP210-003
Issue 1, May 1980
Sheet 2 of 11

SYSTEM OPTIONS
REGISTER 1
(May be accessed by all feature packages)

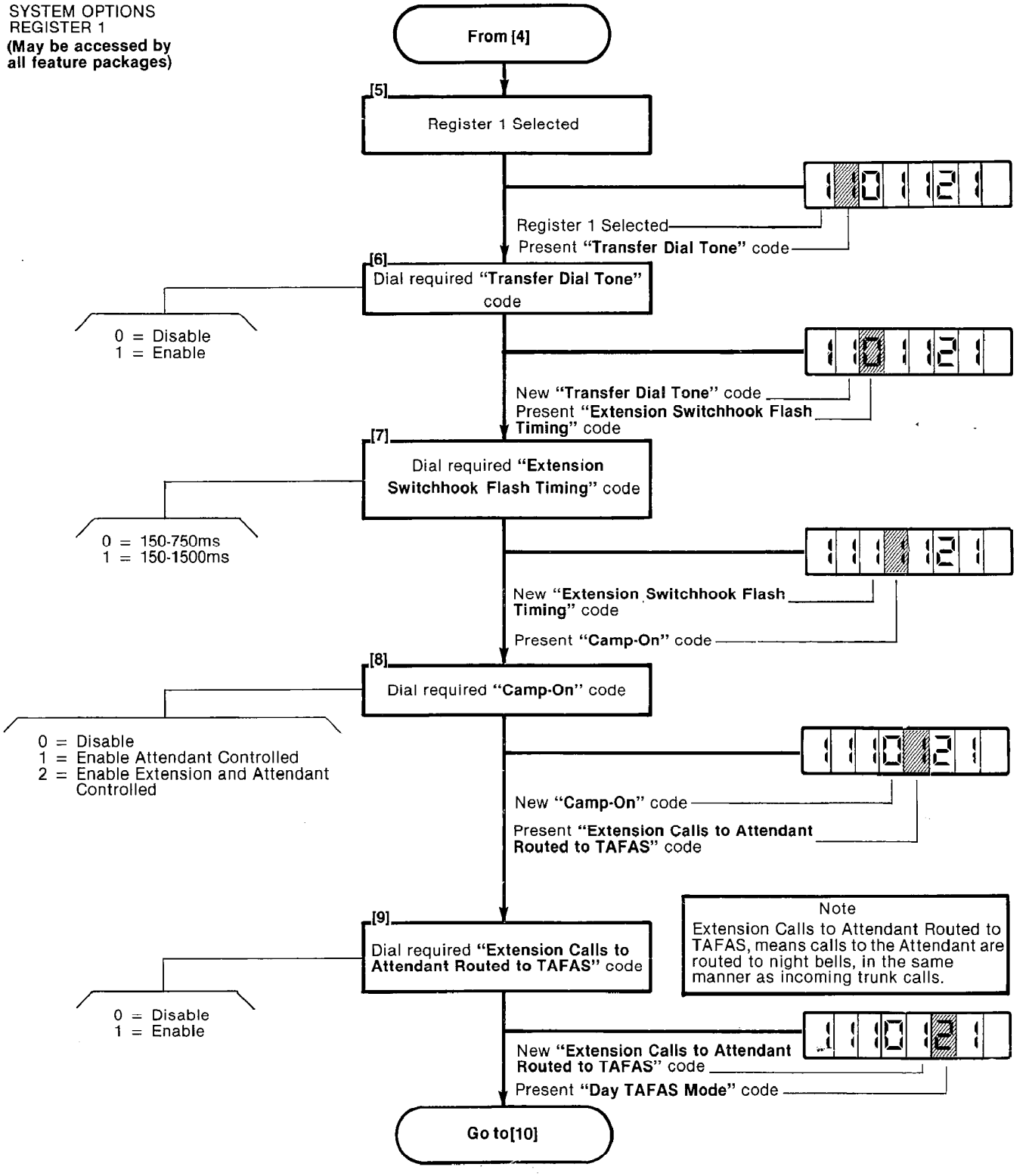

SECTION MITL9102-98-210

SYSTEM OPTIONS PROGRAMMING
MAP210-003
Issue 1, May 1980
Sheet 3 of 11

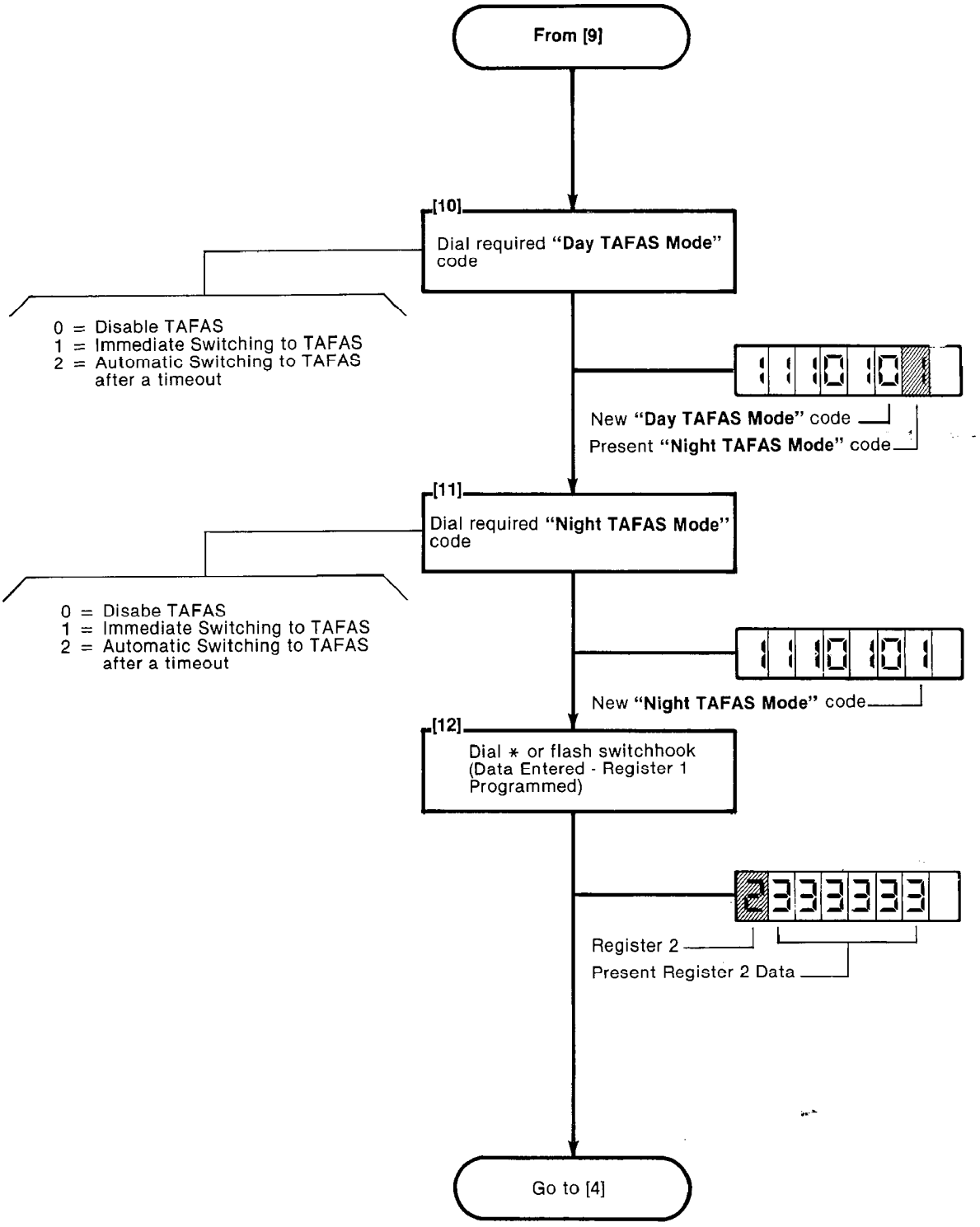

SYSTEM OPTIONS PROGRAMMING
MAP210-003
Issue 1, May 1980
Sheet 4 of 11

SYSTEM OPTIONS
REGISTER 2
(Hotel/Motel and Business Features)

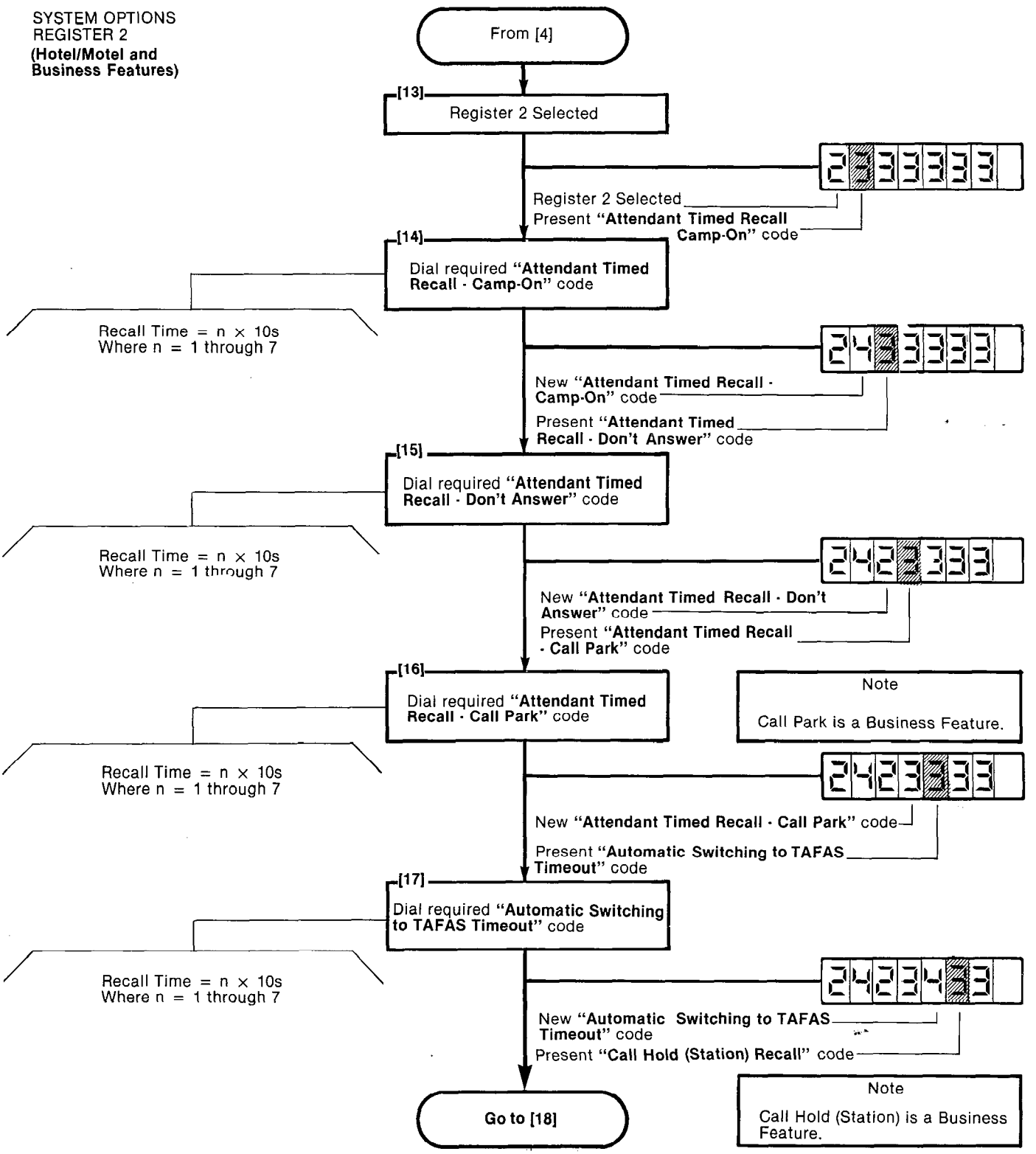

SYSTEM OPTIONS PROGRAMMING
MAP210-003
Issue 1, May 1980
Sheet 5 of 11

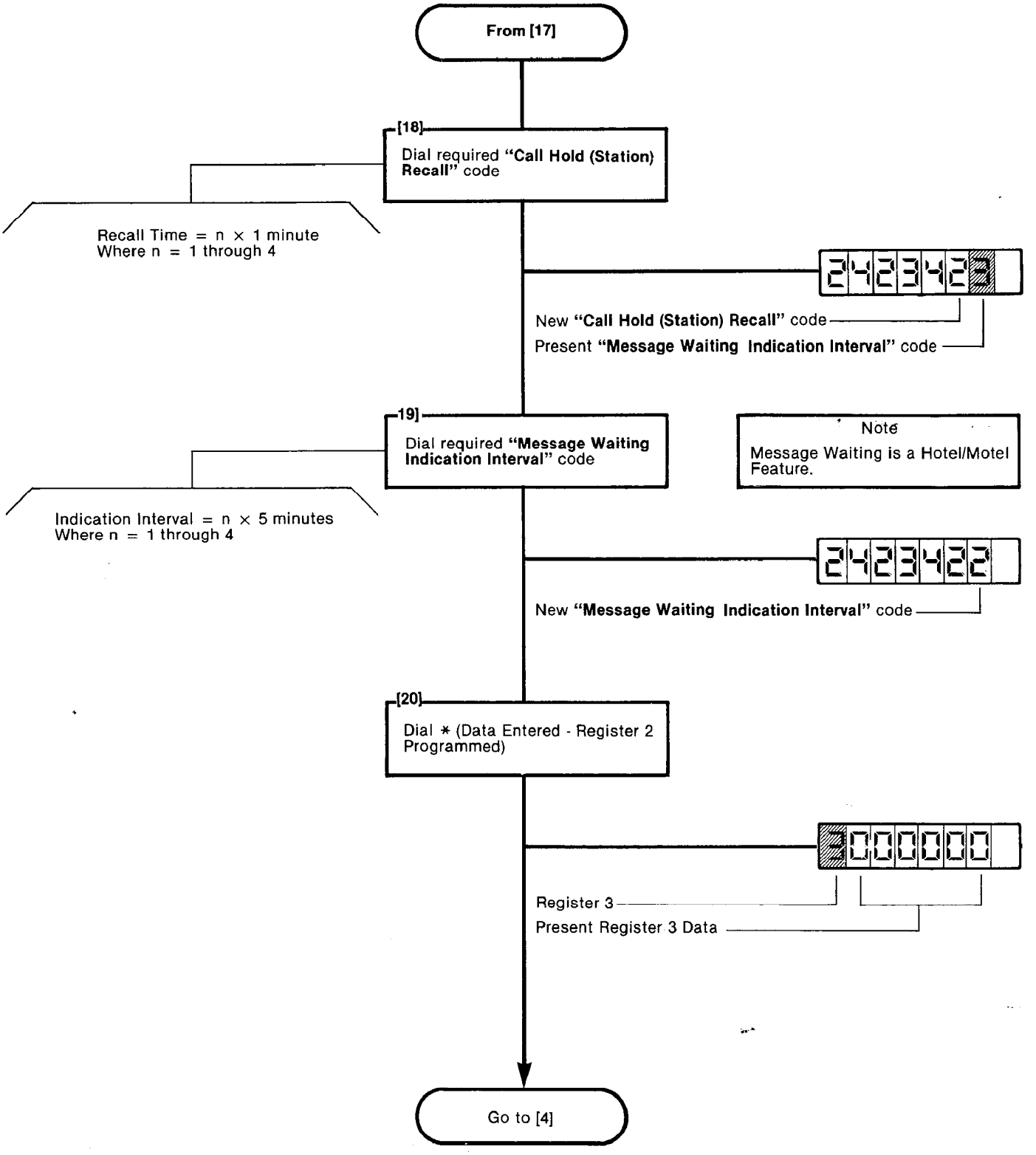

SYSTEM OPTIONS PROGRAMMING
MAP210-003
Issue 1, May 1980
Sheet 6 of 11

SYSTEM OPTIONS
REGISTER 3
(Hotel/Motel and Business Features)

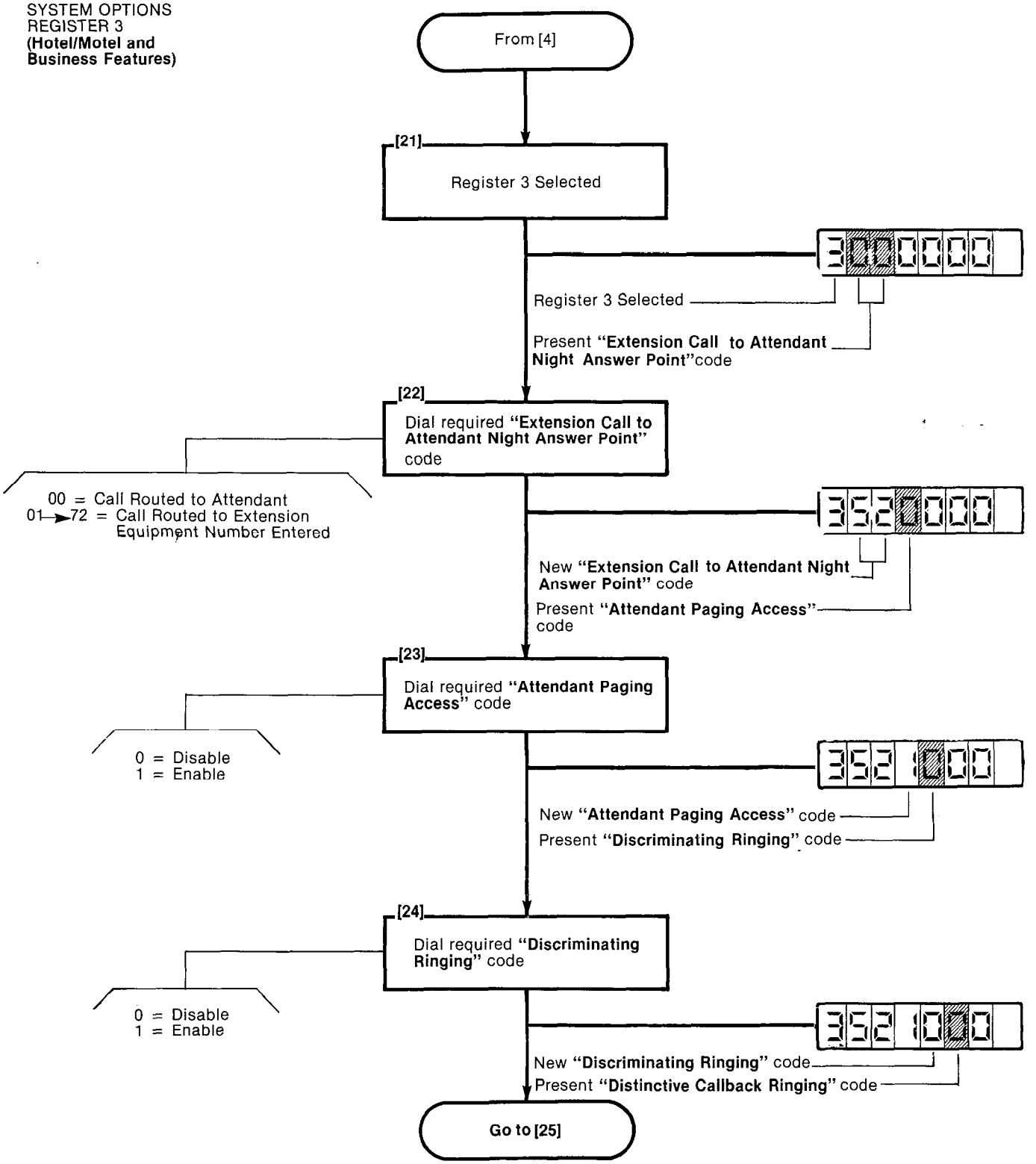

SYSTEM OPTIONS PROGRAMMING
MAP210-003
Issue 1, May 1980
Sheet 7 of 11

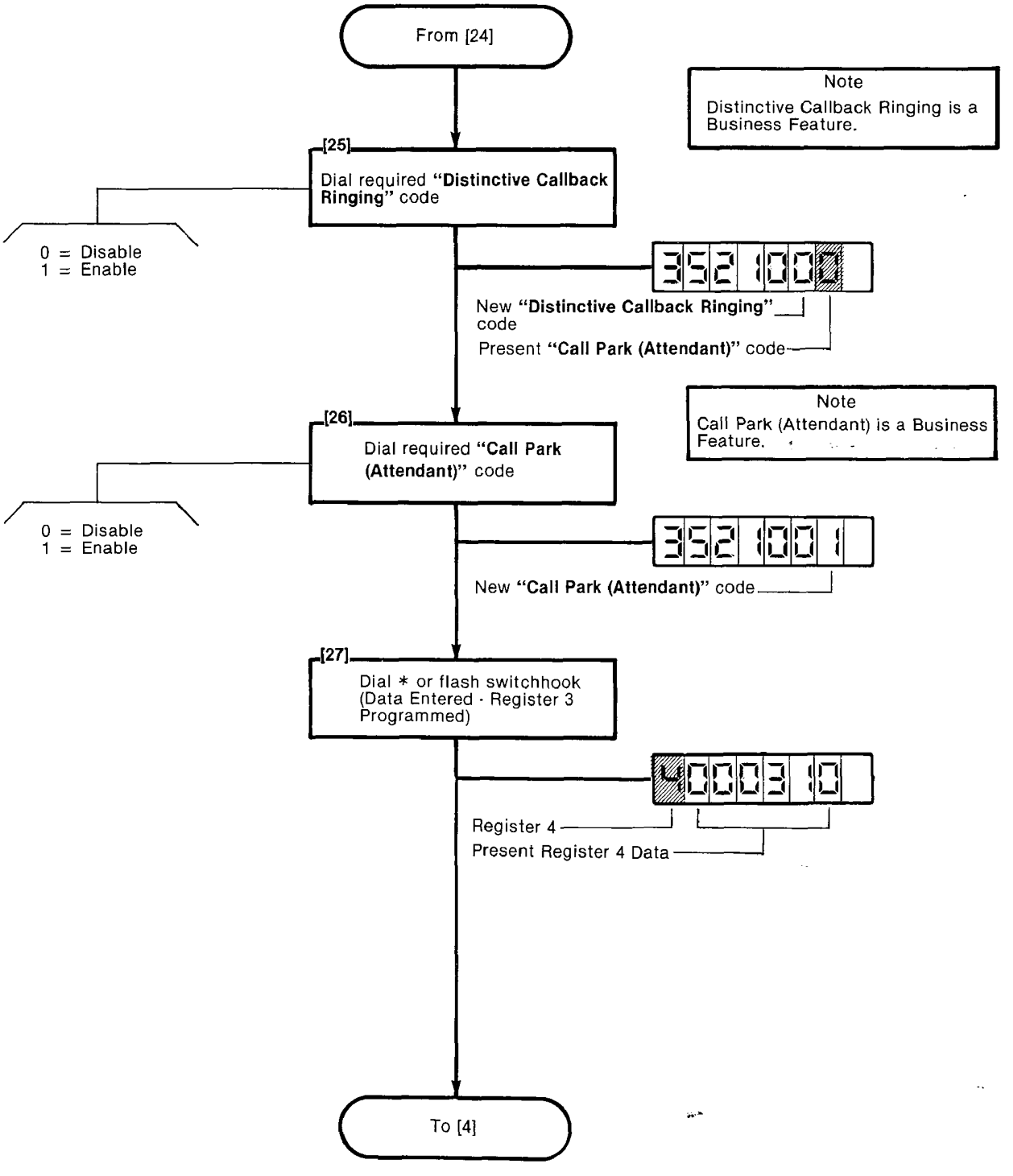

SYSTEM OPTIONS PROGRAMMING
MAP210-003
Issue 1, May 1980
Sheet 8 of 11

SYSTEM OPTIONS
REGISTER 4
(Hotel/Motel Features)

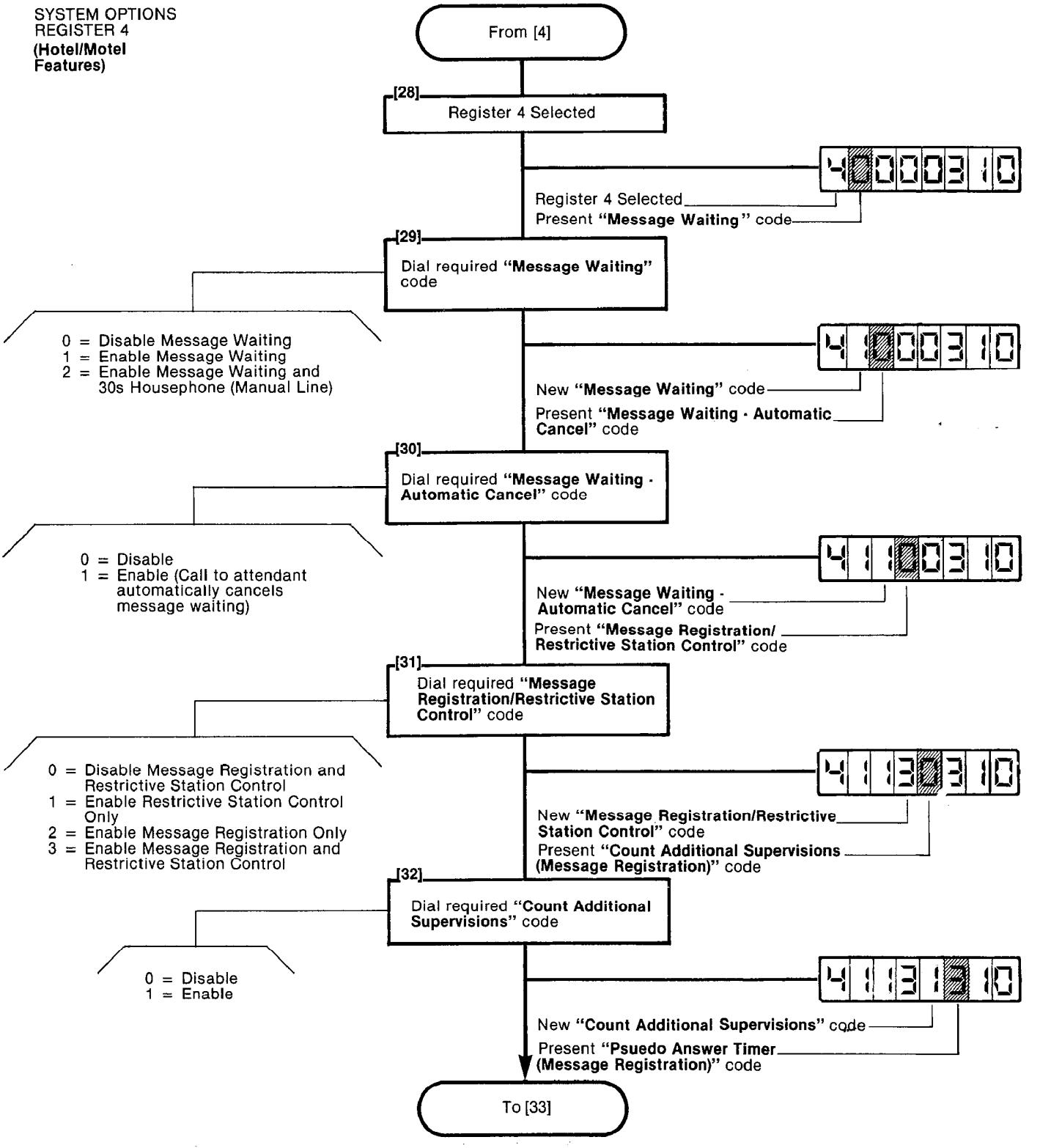

SYSTEM OPTIONS PROGRAMMING
MAP210-003
Issue 1, May 1980
Sheet 9 of 11

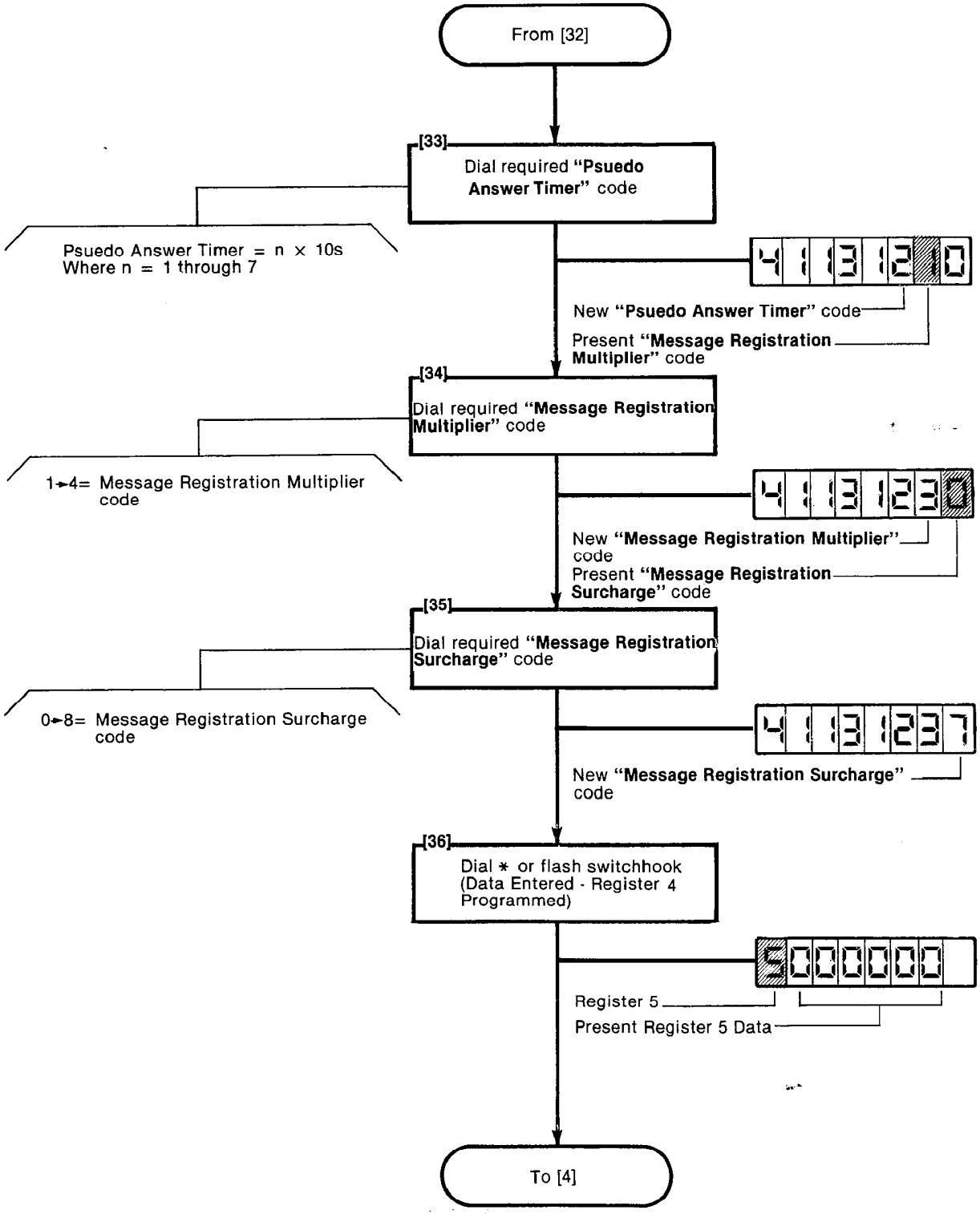

SYSTEM OPTIONS PROGRAMMING
MAP210-003
Issue 1, May 1980
Sheet 10 of 11

SYSTEM OPTIONS
REGISTER 5
(May be accessed by all features packages)

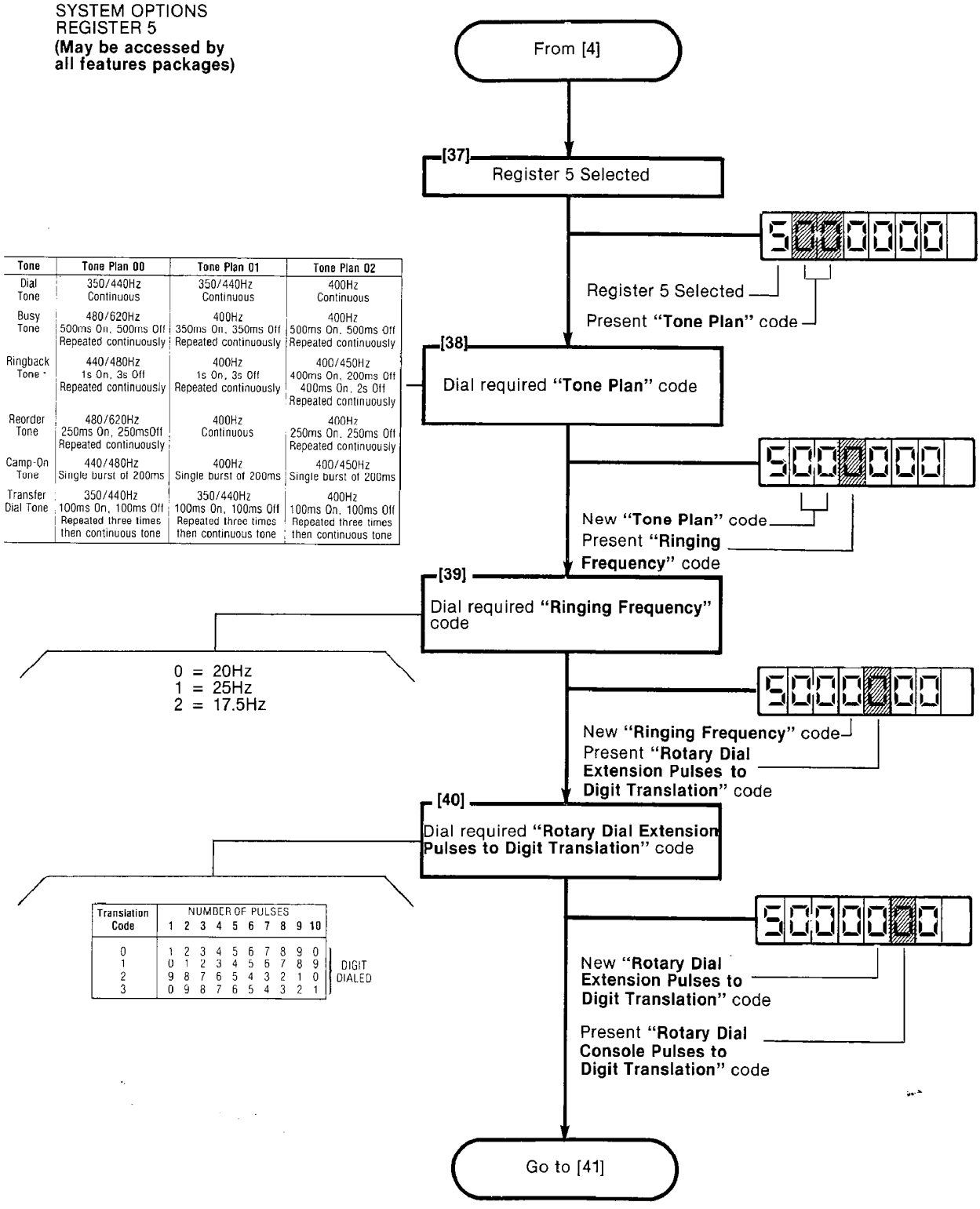

Tone	Tone Plan 00	Tone Plan 01	Tone Plan 02
Dial Tone	350/440Hz Continuous	350/440Hz Continuous	400Hz Continuous
Busy Tone	480/620Hz 500ms On, 500ms Off Repeated continuously	400Hz 350ms On, 350ms Off Repeated continuously	400Hz 500ms On, 500ms Off Repeated continuously
Ringback Tone	440/480Hz 1s On, 3s Off Repeated continuously	400Hz 1s On, 3s Off Repeated continuously	400/450Hz 400ms On, 200ms Off 400ms On, 2s Off Repeated continuously
Reorder Tone	480/620Hz 250ms On, 250msOff Repeated continuously	400Hz Continuous	400Hz 250ms On, 250ms Off Repeated continuously
Camp-On Tone	440/480Hz Single burst of 200ms	400Hz Single burst of 200ms	400/450Hz Single burst of 200ms
Transfer Dial Tone	350/440Hz 100ms On, 100ms Off Repeated three times then continuous tone	350/440Hz 100ms On, 100ms Off Repeated three times then continuous tone	400Hz 100ms On, 100ms Off Repeated three times then continuous tone

Translation Code	NUMBER OF PULSES 1	2	3	4	5	6	7	8	9	10
0	1	2	3	4	5	6	7	8	9	0
1	0	1	2	3	4	5	6	7	8	9
2	9	8	7	6	5	4	3	2	1	0
3	0	9	8	7	6	5	4	3	2	1

DIGIT DIALED

A to Z KELLATRONICS, Inc.

Tel: 800.766.3425
email: info@kellatronics.com Fax: 818.773.8899

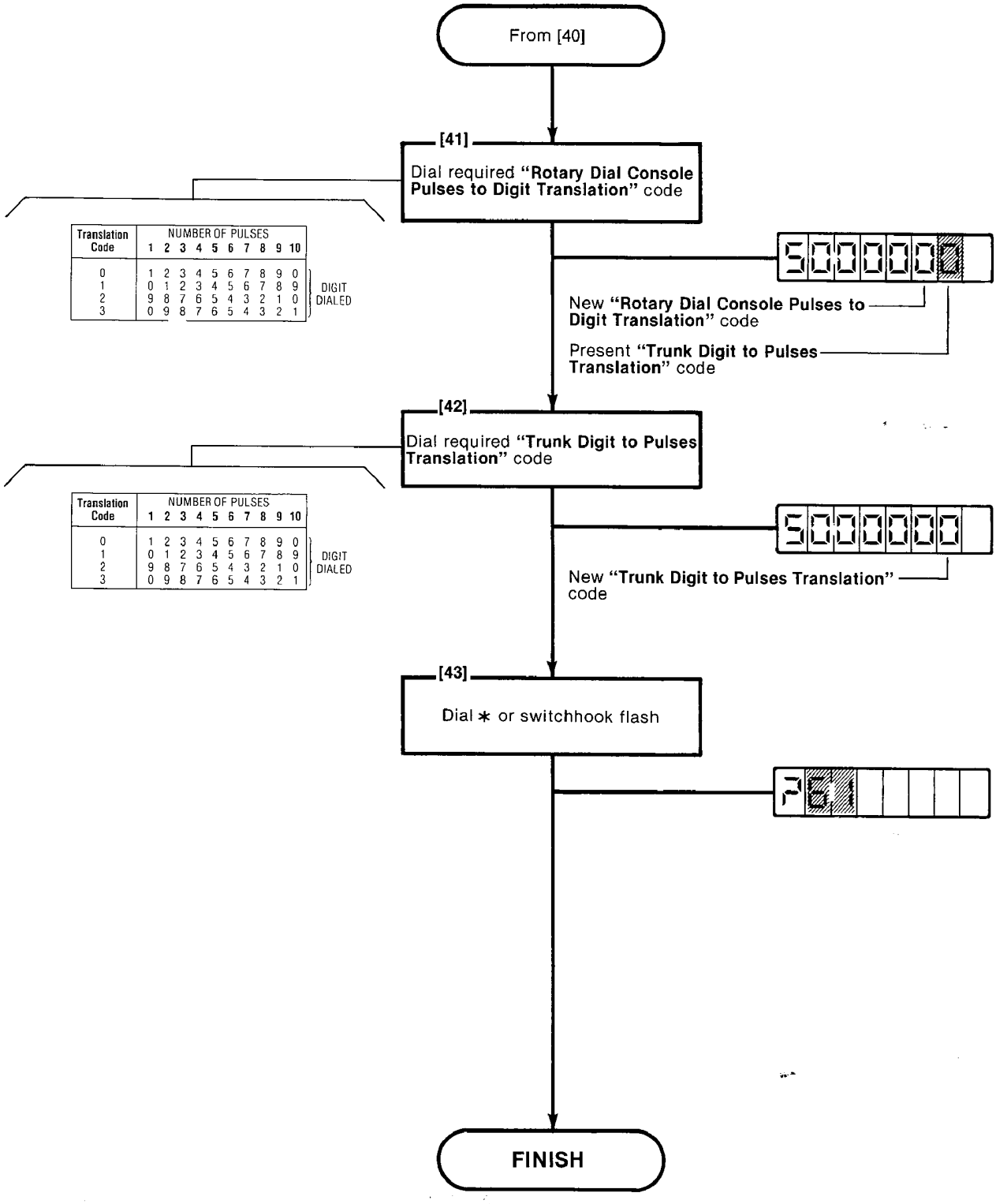

FEATURE ACCESS CODE PROGRAMMING
MAP210-004
Issue 1, May 1980
Sheet 1 of 2

Feature Access Codes (Command Number 62) - a number of features in the system have special access codes. These codes may be programmed in the Hotel/Motel and Business features packages. In the basic features package the feature access codes are assigned by the system and are as shown in the Default Numbering Plan, Table 1-1.

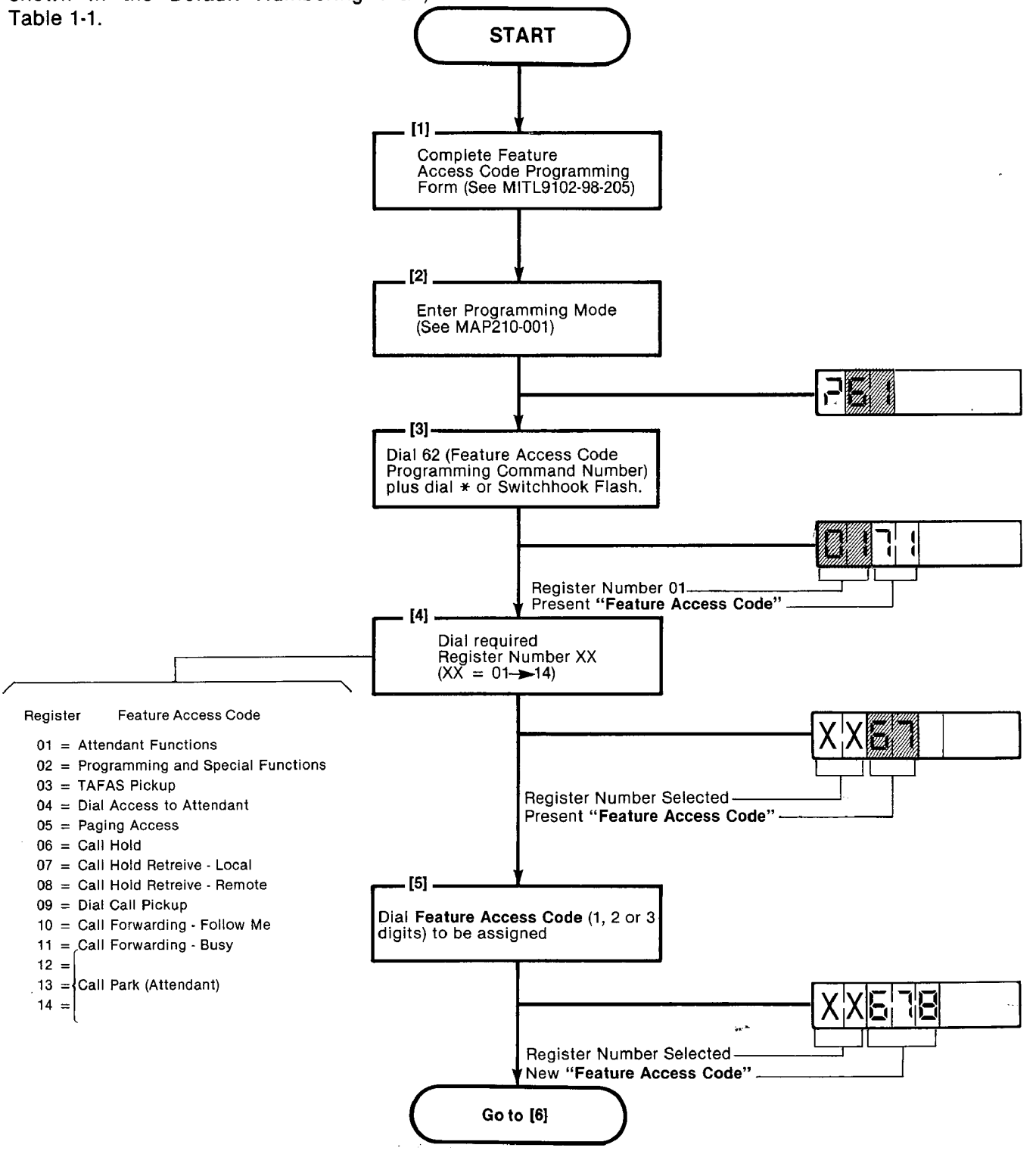

FEATURE ACCESS CODE PROGRAMMING
MAP210-004
Issue 1, May 1980
Sheet 2 of 2

Note

Access Code and Numbering Plan conflicts are not allowed.

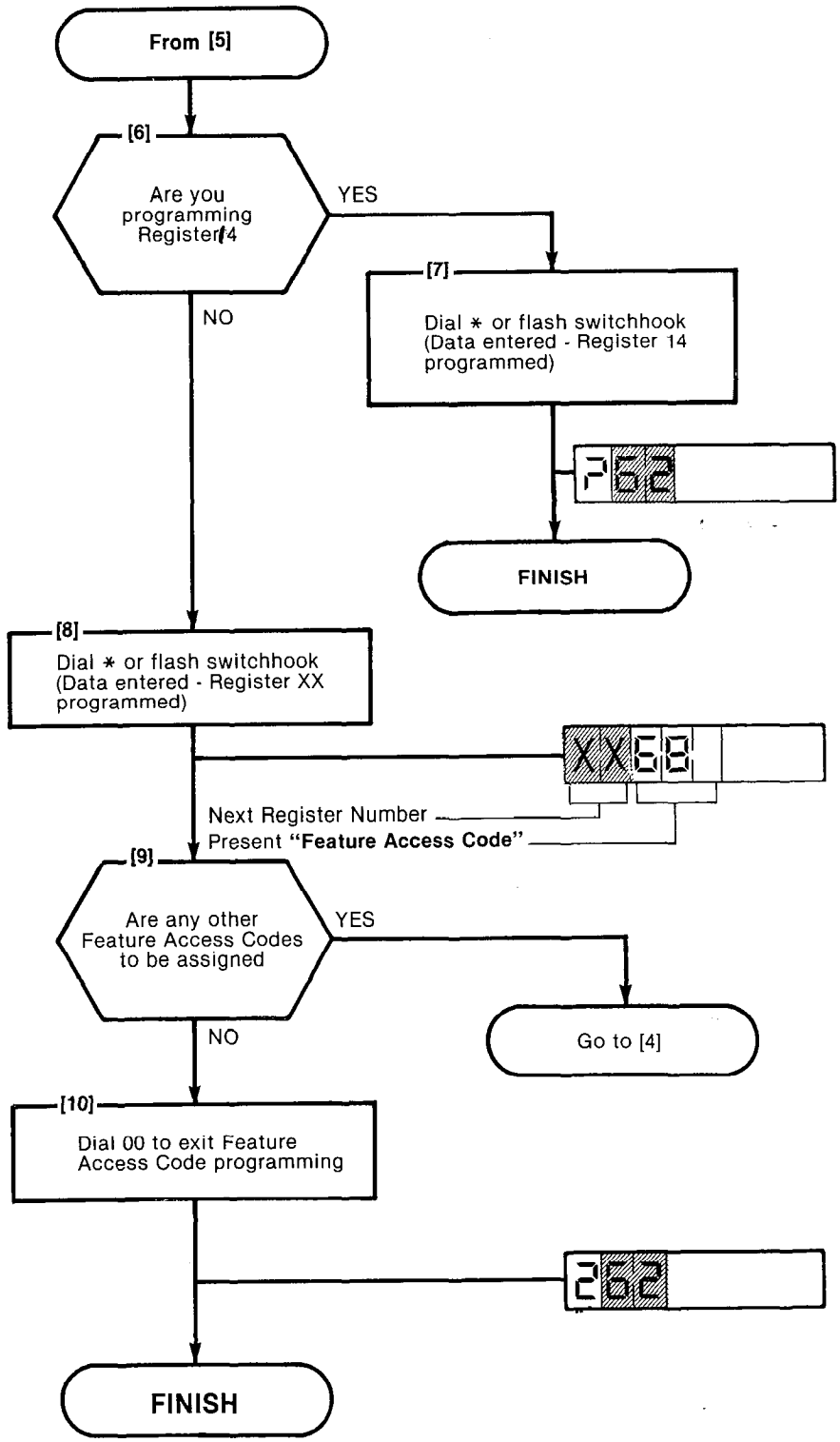

Toll Control Plan Programming (Command Numbers 63 and 64) - the SX-20 allows two independant Toll Control Plans to be specified. Command Number 63 provides access to Toll Control Plan 1 and Command Number 64 access to Control Plan 2.

TOLL CONTROL PLAN PROGRAMMING
MAP210-005
Issue 1, May 1980
Sheet 1 of 8

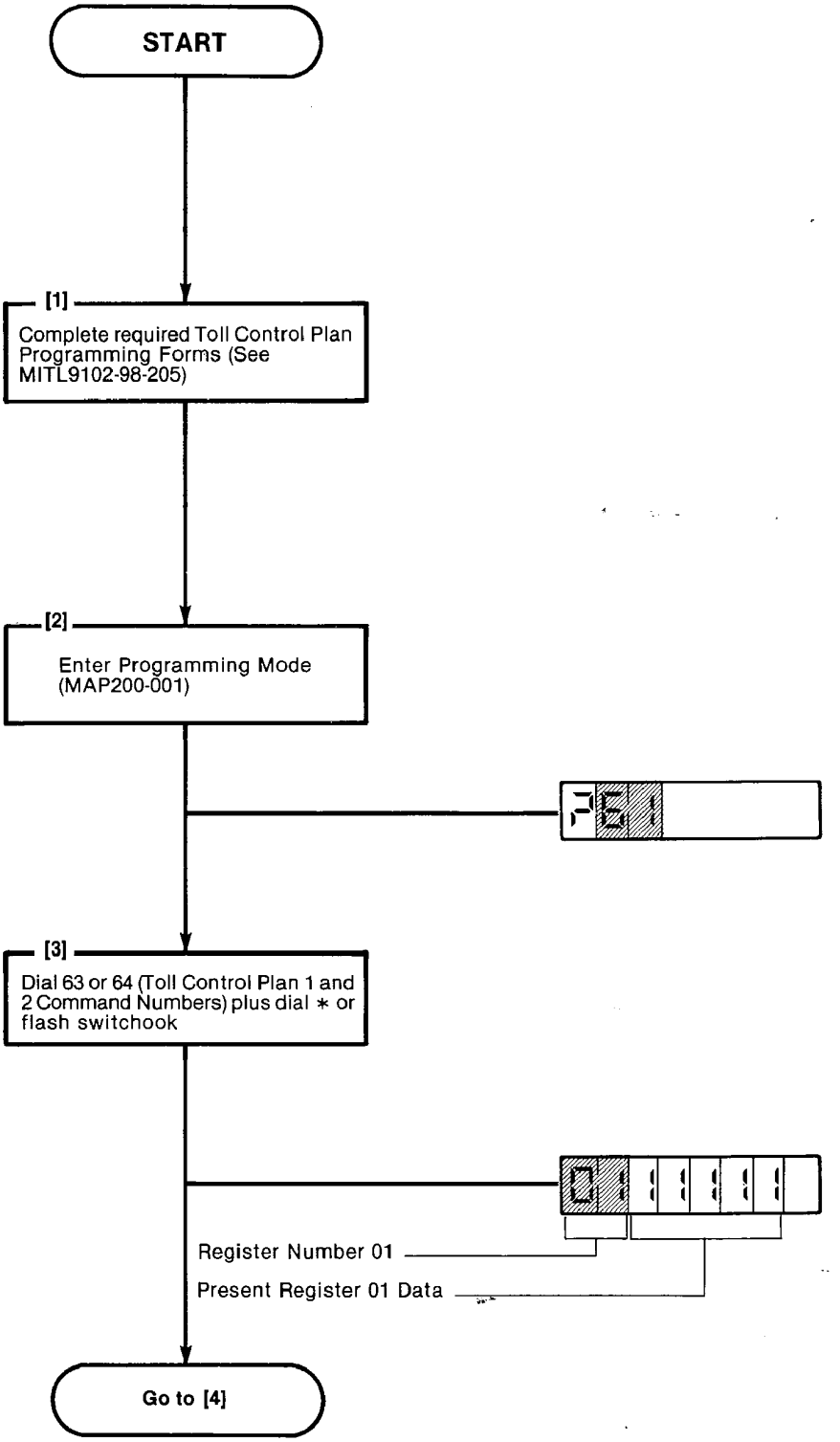

TOLL CONTROL PLAN PROGRAMMING
MAP210-005
Issue 1, May 1980
Sheet 2 of 8

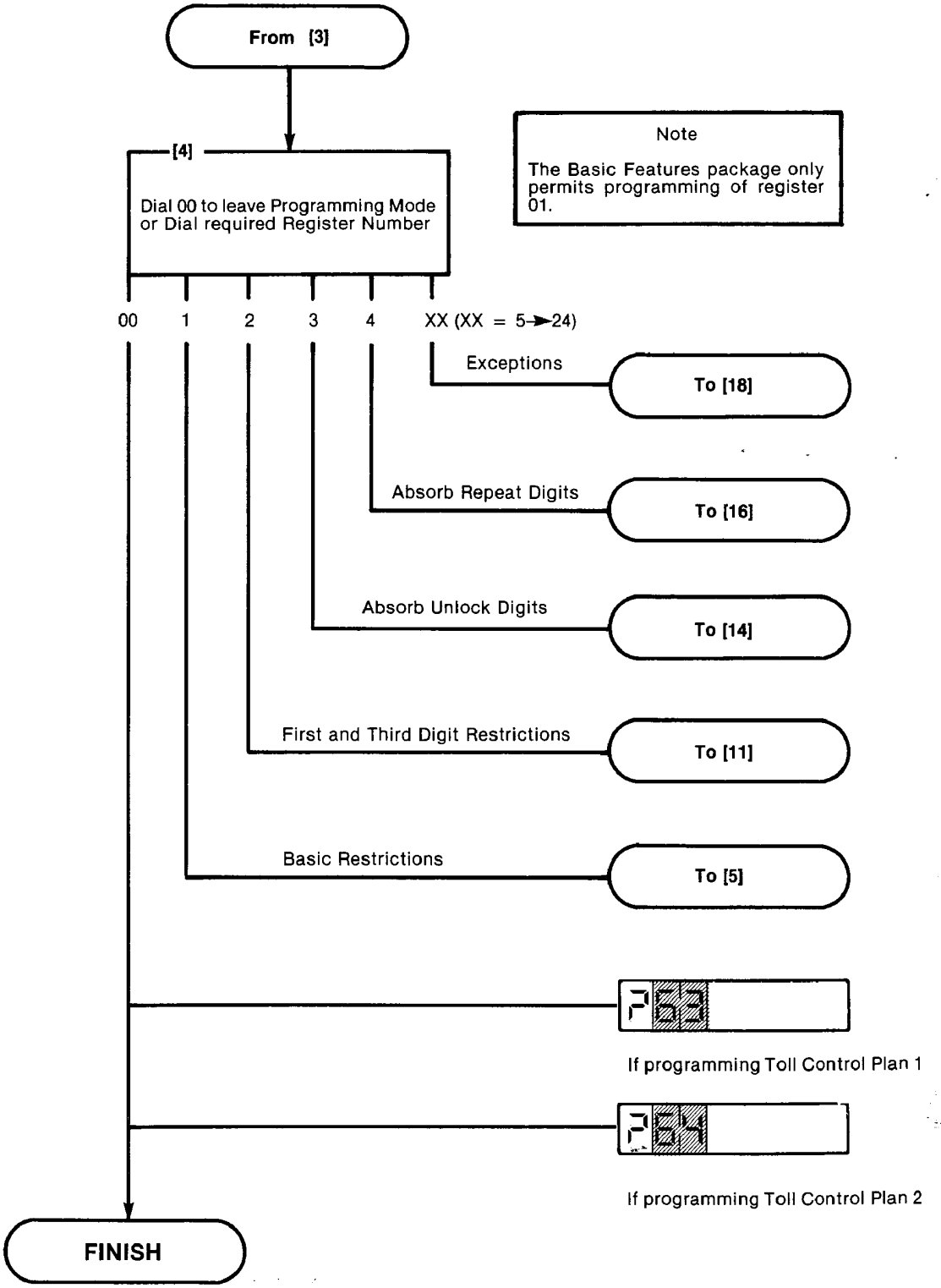

TOLL CONTROL PLAN PROGRAMMING
MAP210-005
Issue 1, May 1980
Sheet 3 of 8

REGISTER 1
(May be programmed with all features packages)

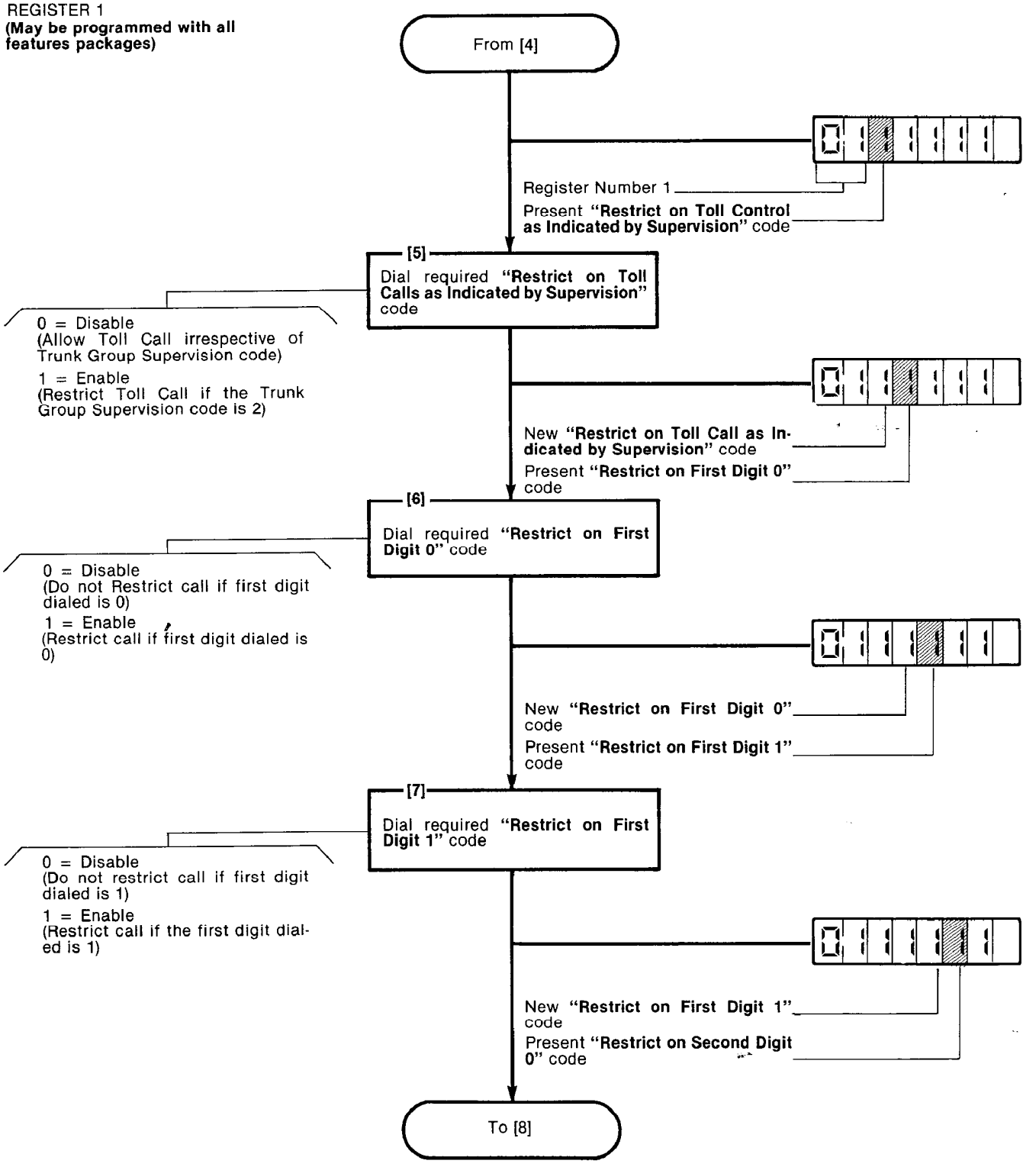

TOLL CONTROL PLAN PROGRAMMING
MAP210-005
Issue 1, May 1980
Sheet 4 of 8

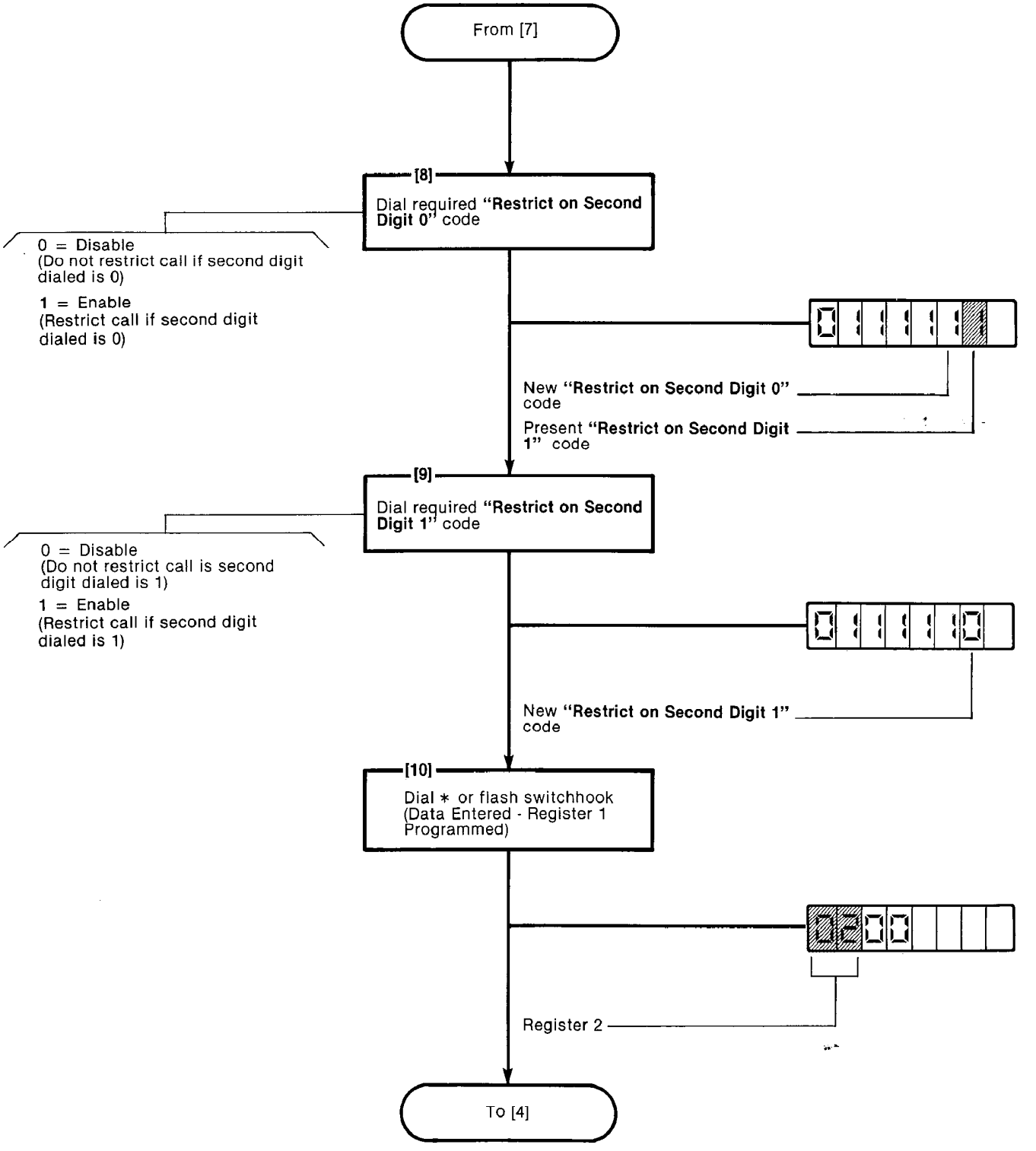

TOLL CONTROL PLAN PROGRAMMING
MAP210-005
Issue 1, May 1980
Sheet 5 of 8

REGISTER 2
(May be programmed with Hotel/Motel and Business Features packages)

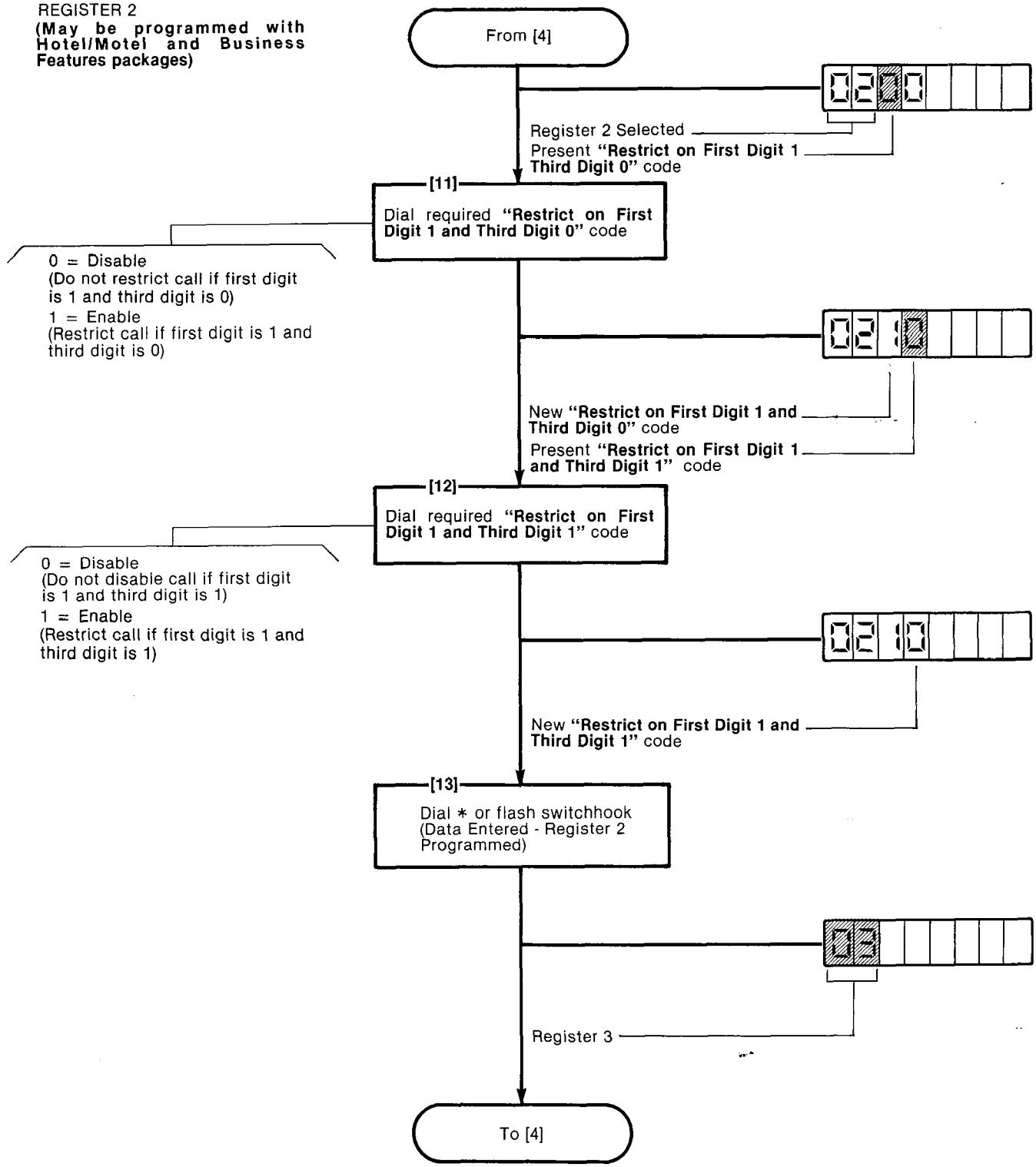

TOLL CONTROL PLAN PROGRAMMING
MAP210-005
Issue 1, May 1980
Sheet 6 of 8

REGISTER 3
(May be programmed with Hotel/Motel and Business Features packages)

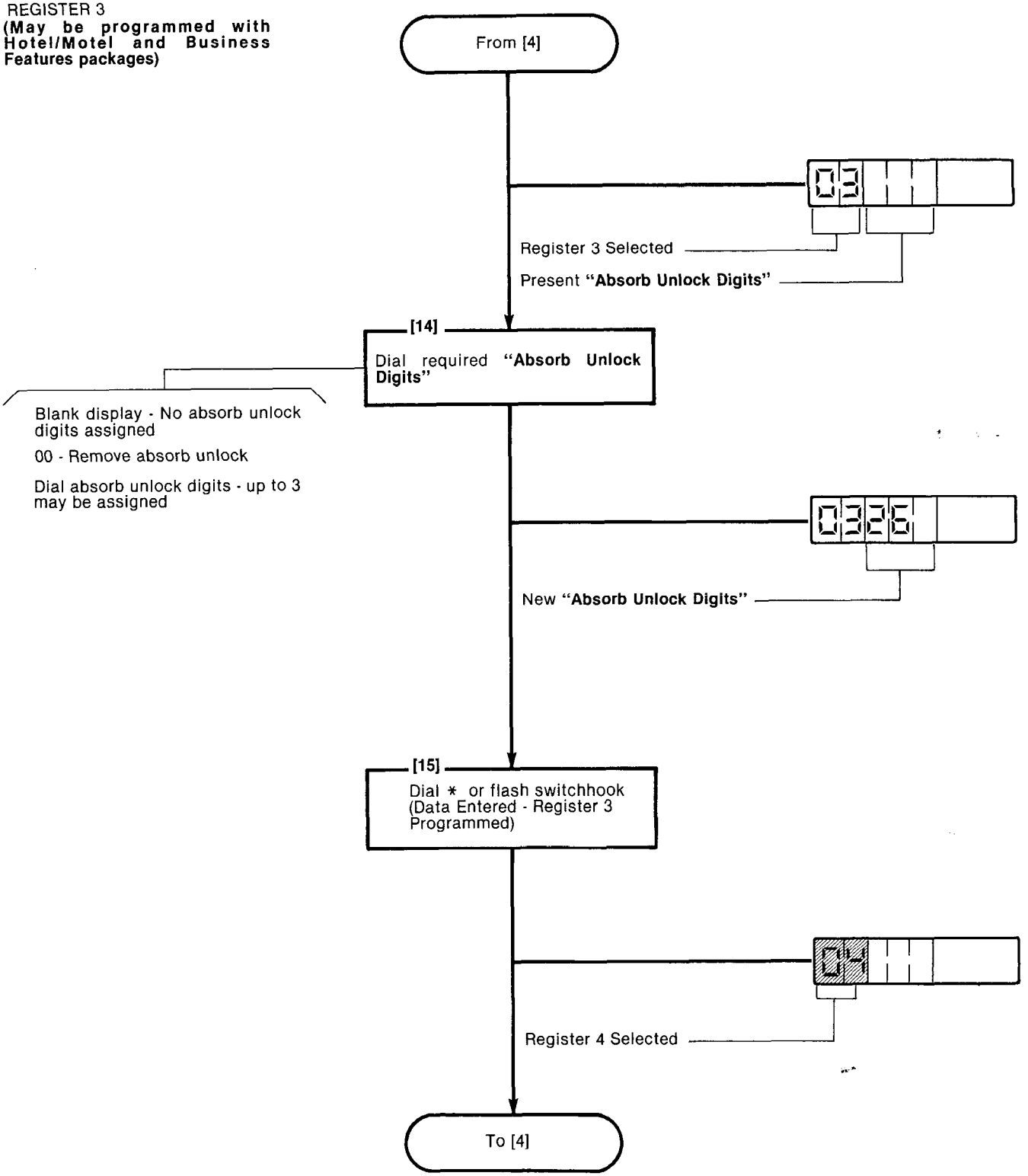

REGISTER 4
(May be programmed with Hotel/Motel and Business Features packages)

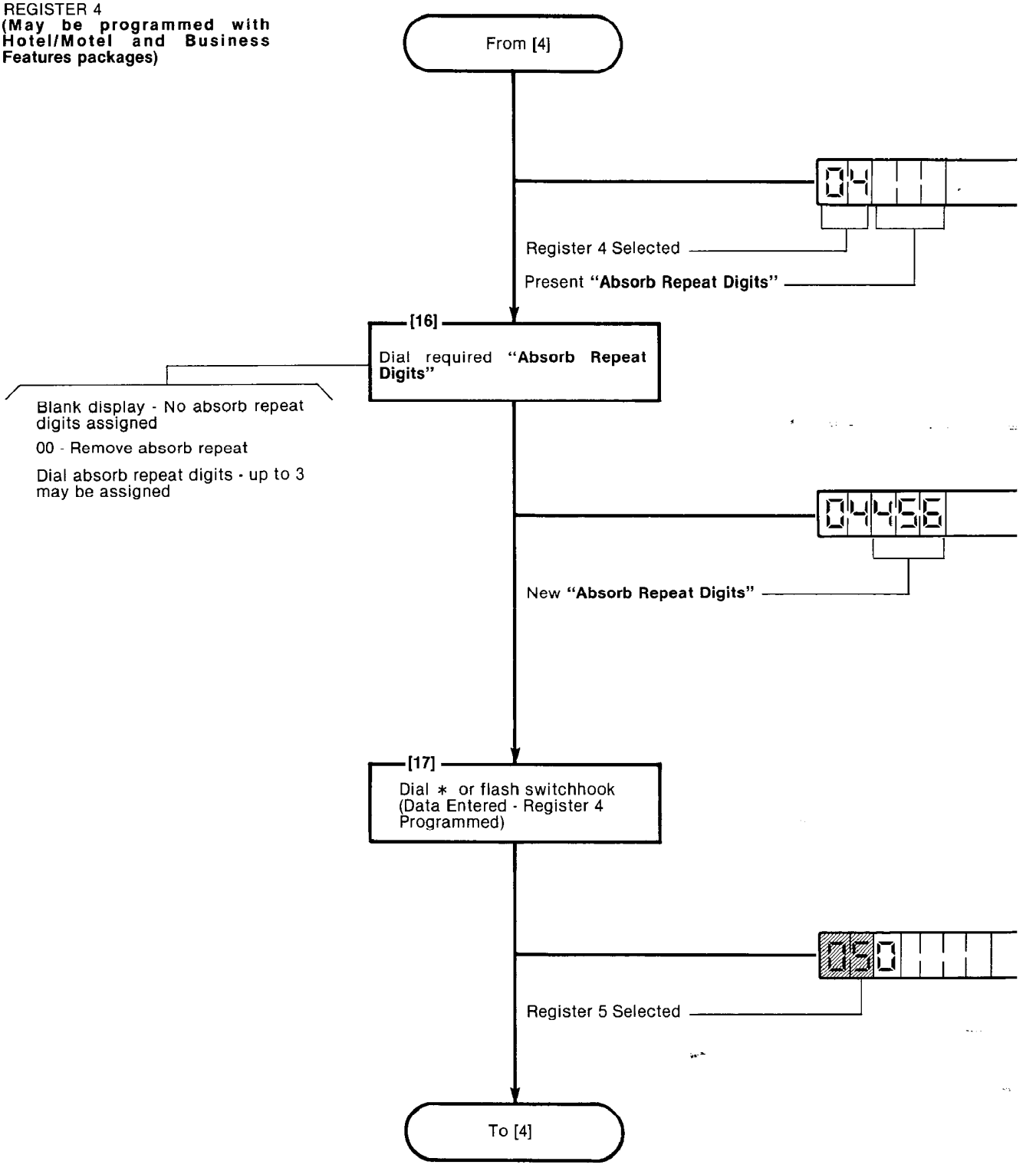

TOLL CONTROL PLAN PROGRAMMING
MAP210-005
Issue 1, May 1980
Sheet 8 of 8

REGISTERS 5-24
(May be programmed with Hotel/Motel and Business Features packages)

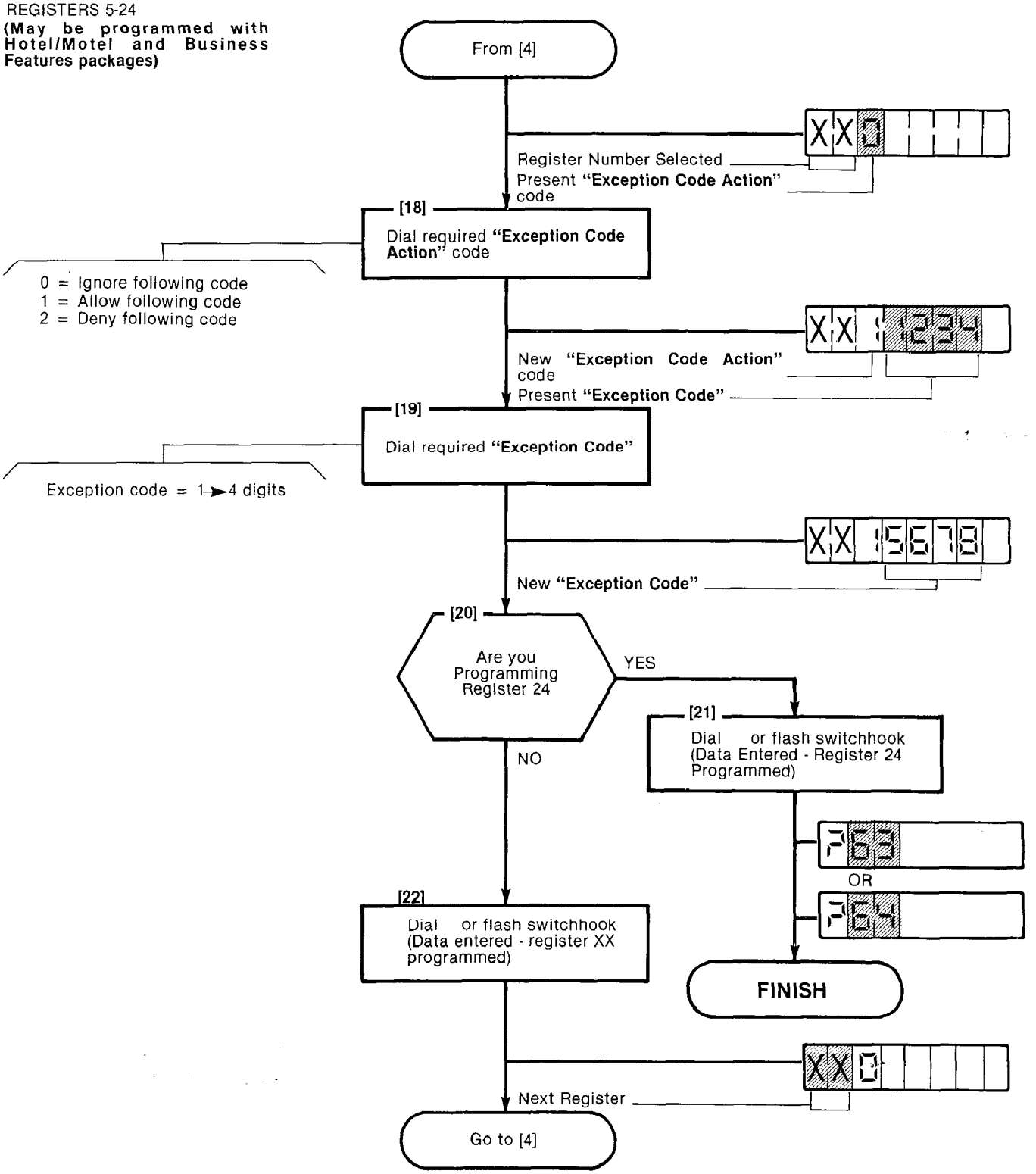

TRUNK GROUP PROGRAMMING
MAP210-006
Issue 1, May 1980
Sheet 1 of 3

Trunk Group Programming (Command Number 65) - a maximum of four individual Trunk Groups may be programmed within each system. This command allows the parameters for each individual trunk group to be entered.

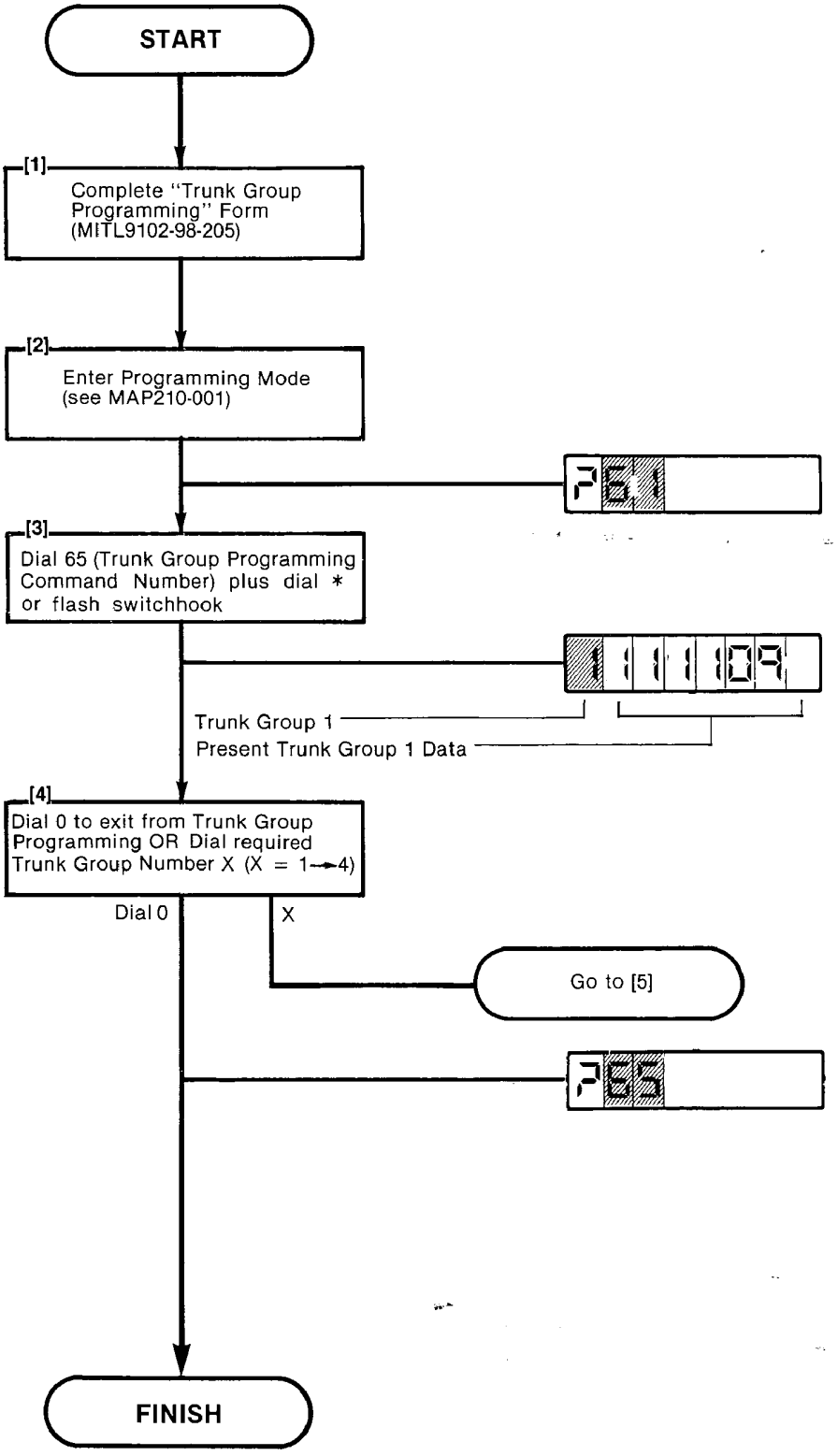

TRUNK GROUP PROGRAMMING
MAP210-006
Issue 1, May 1980
Sheet 2 of 3

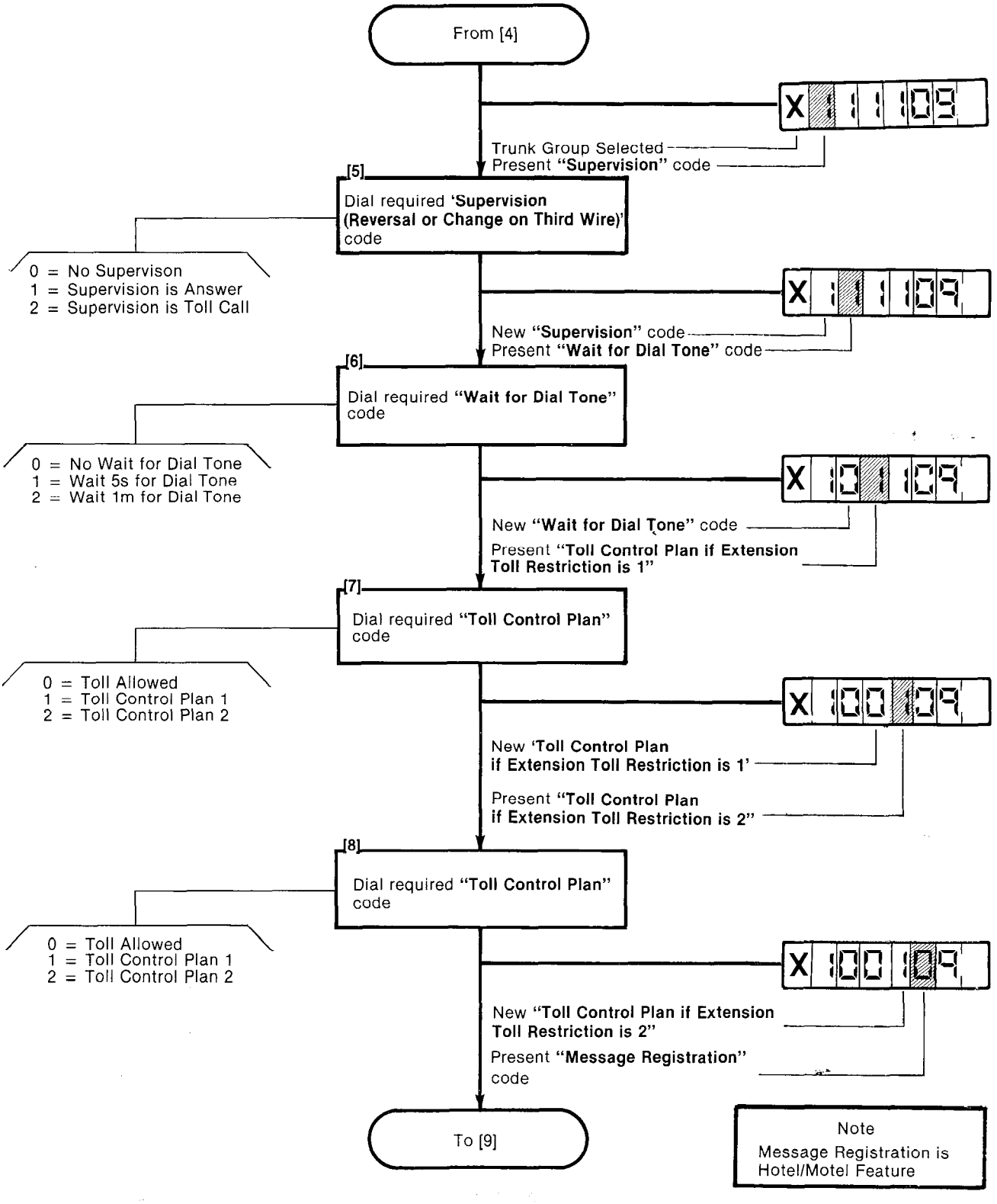

TRUNK GROUP PROGRAMMING
MAP210-006
Issue 1, May 1980
Sheet 3 of 3

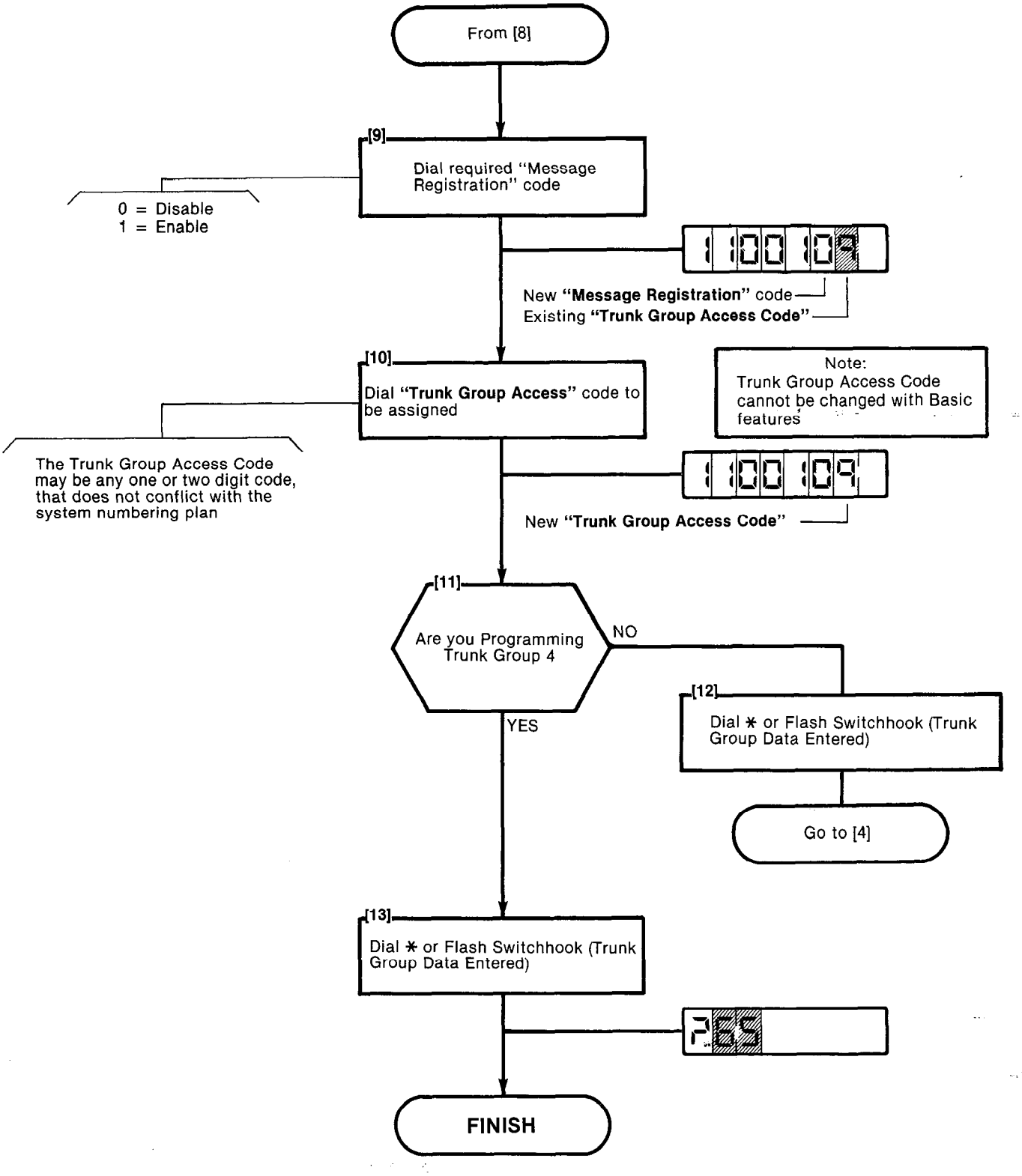

Trunk Programming (Command Number 66)
- this program allows each customer to specify the types of trunks employed in the system, their characteristics, and the day and night answer modes (e.g. console or extension)

TRUNK PROGRAMMING
MAP210-007
Issue 1, May 1980
Sheet 1 of 6

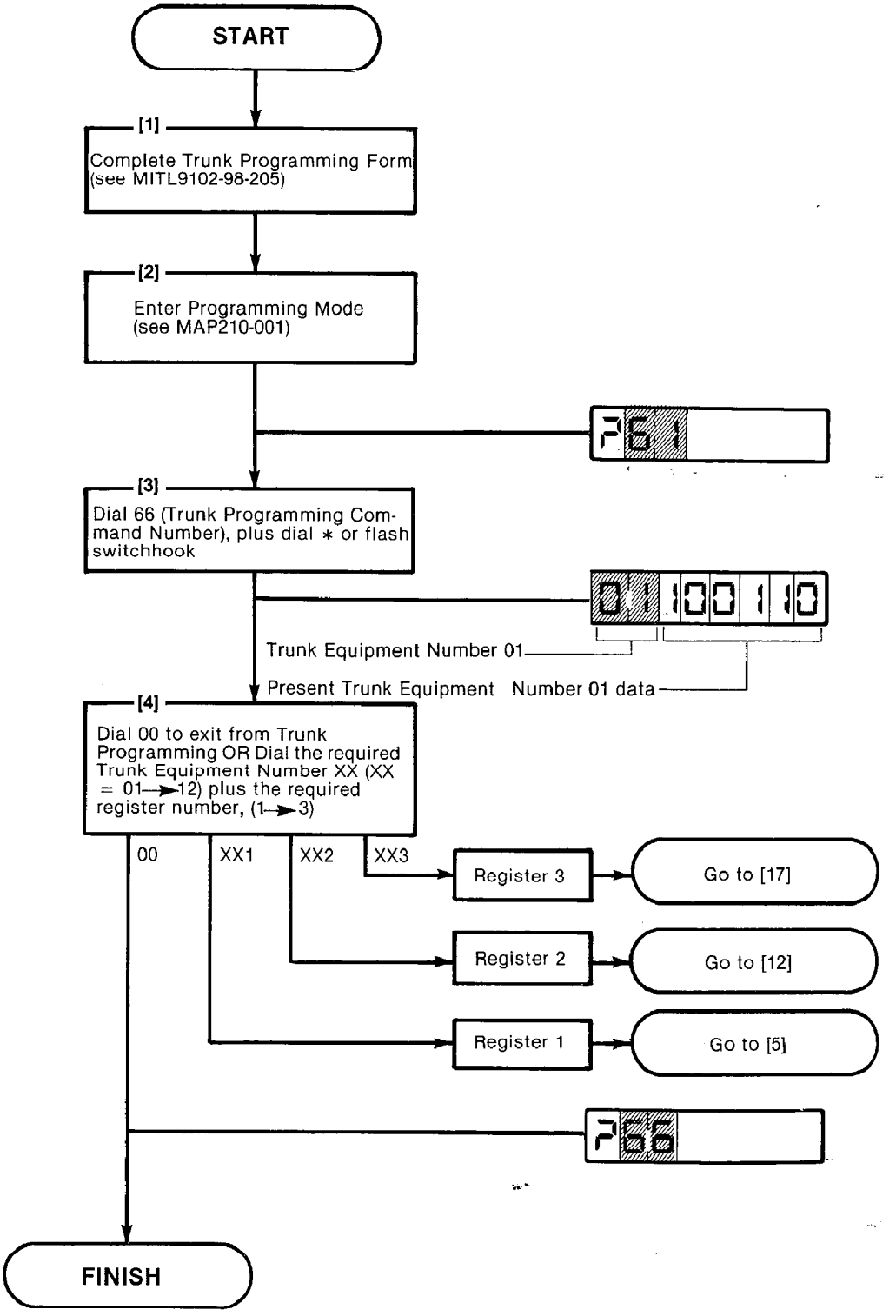

TRUNK PROGRAMMING
MAP210-007
Issue 1, May 1980
Sheet 2 of 6

TRUNK PROGRAMMING
REGISTER 1

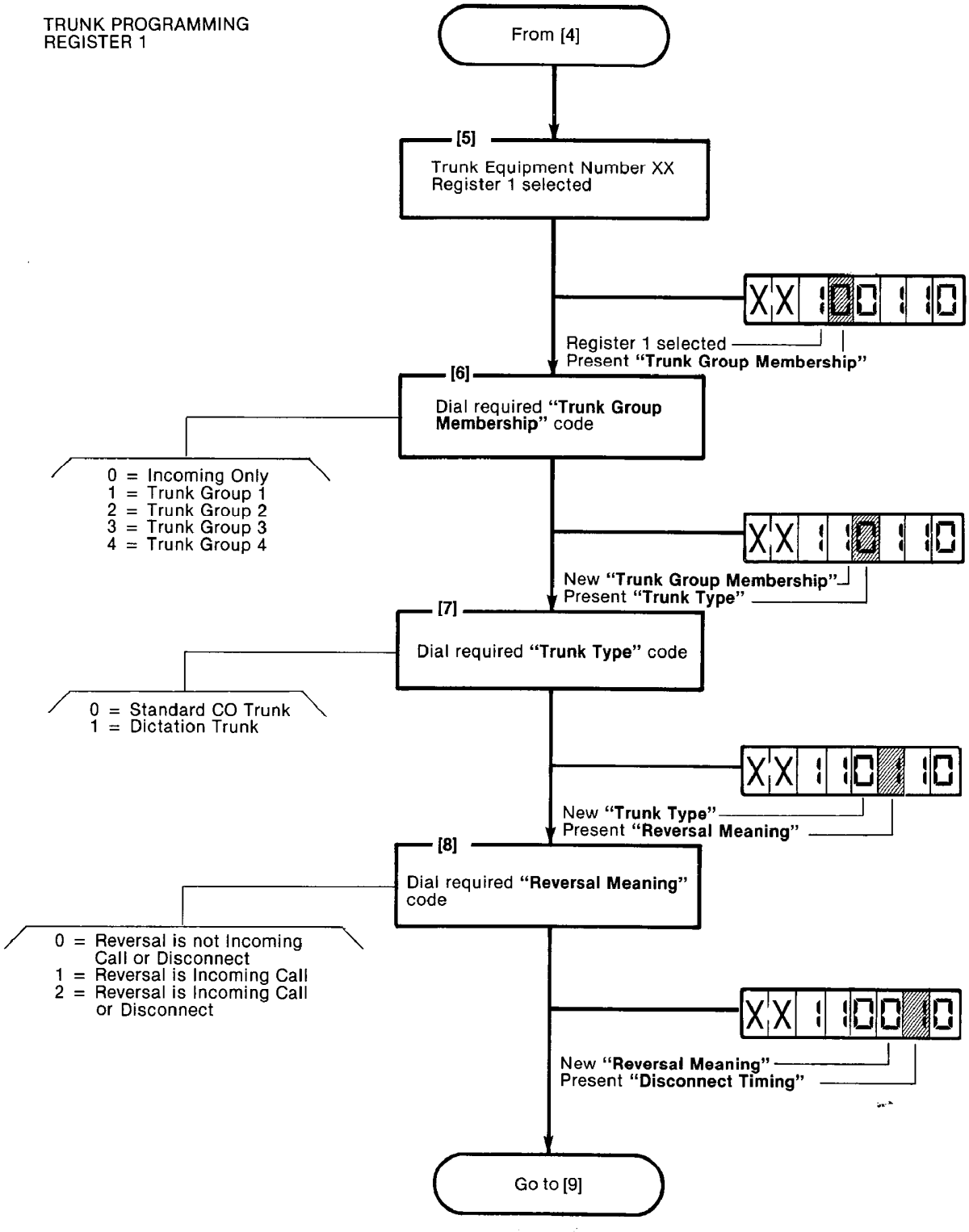

TRUNK PROGRAMMING
MAP210-007
Issue 1, May 1980
Sheet 3 of 6

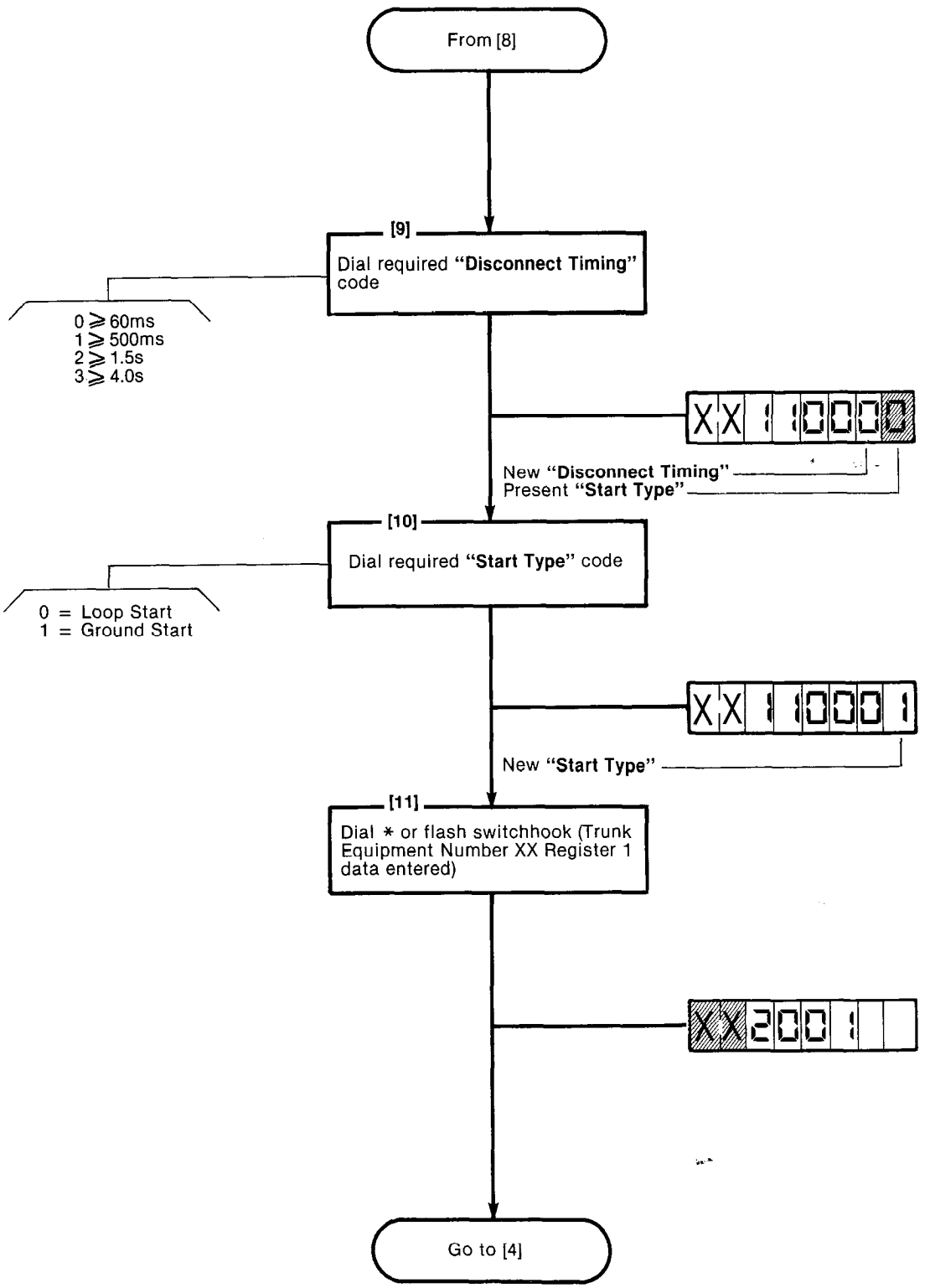

TRUNK PROGRAMMING
MAP210-007
Issue 1, May 1980
Sheet 4 of 6

TRUNK PROGRAMMING
REGISTER 2

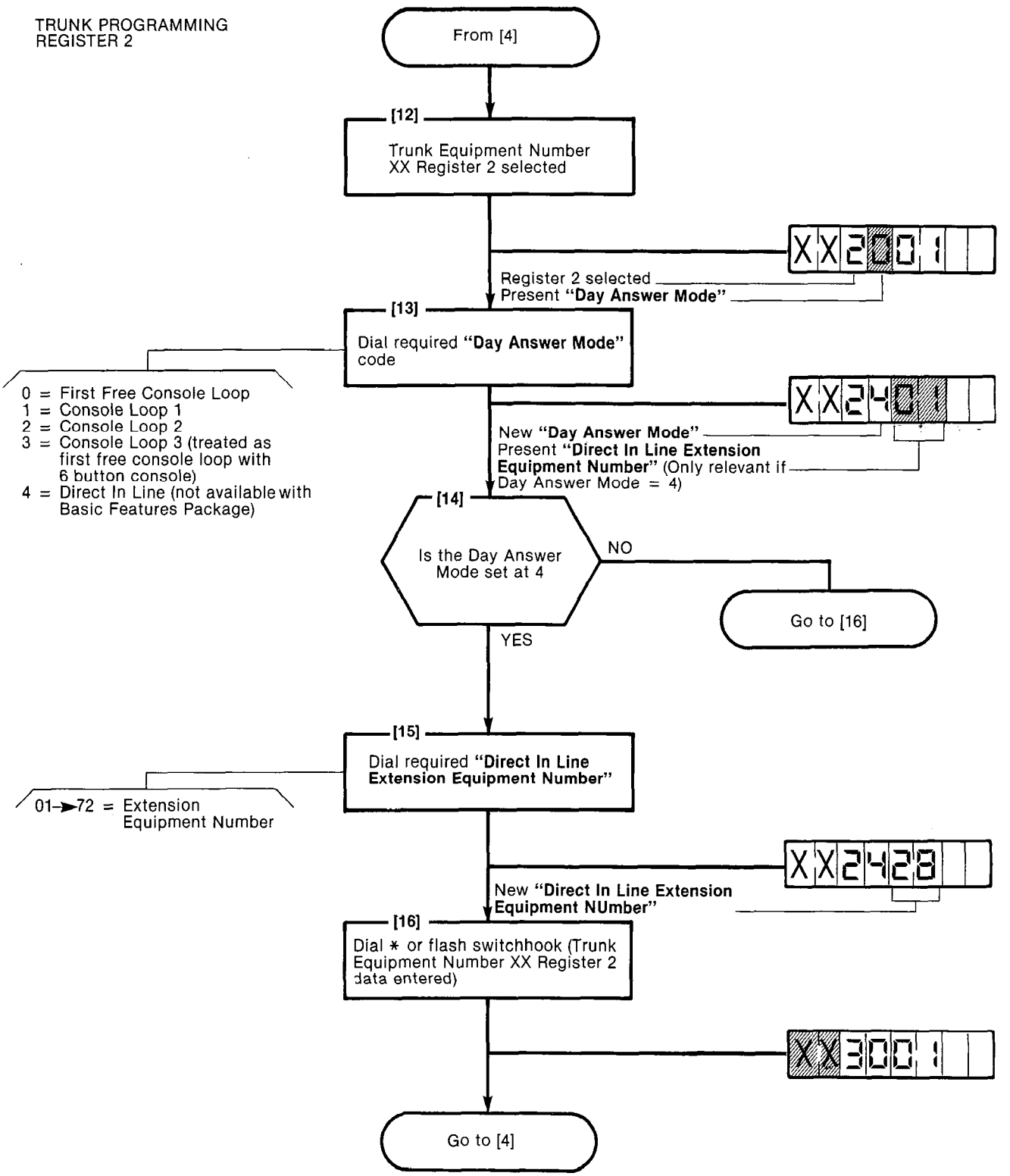

TRUNK PROGRAMMING
MAP210-007
Issue 1, May 1980
Sheet 5 of 6

TRUNK PROGRAMMING
REGISTER 3

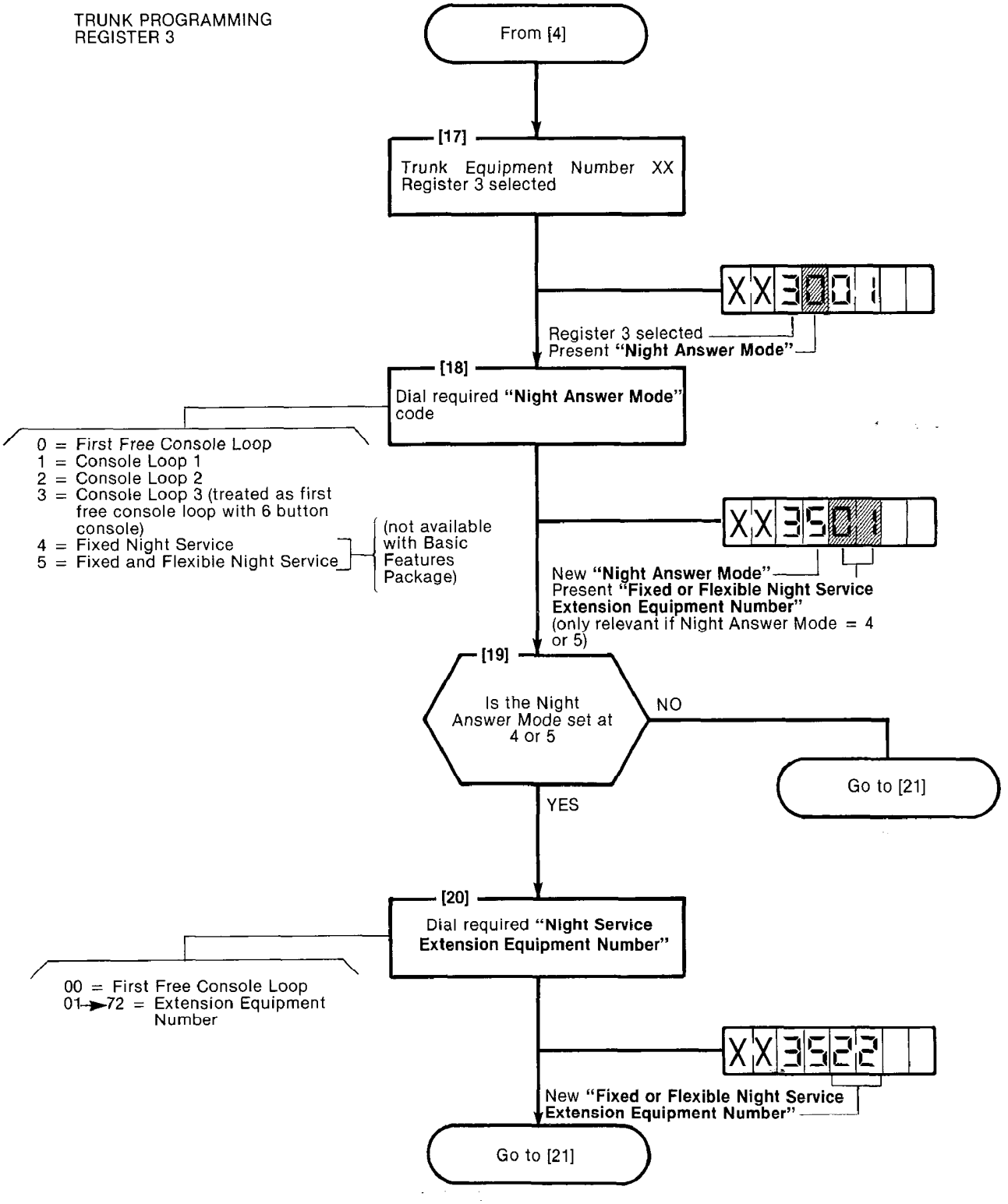

TRUNK PROGRAMMING
MAP210-007
Issue 1, May 1980
Sheet 6 of 6

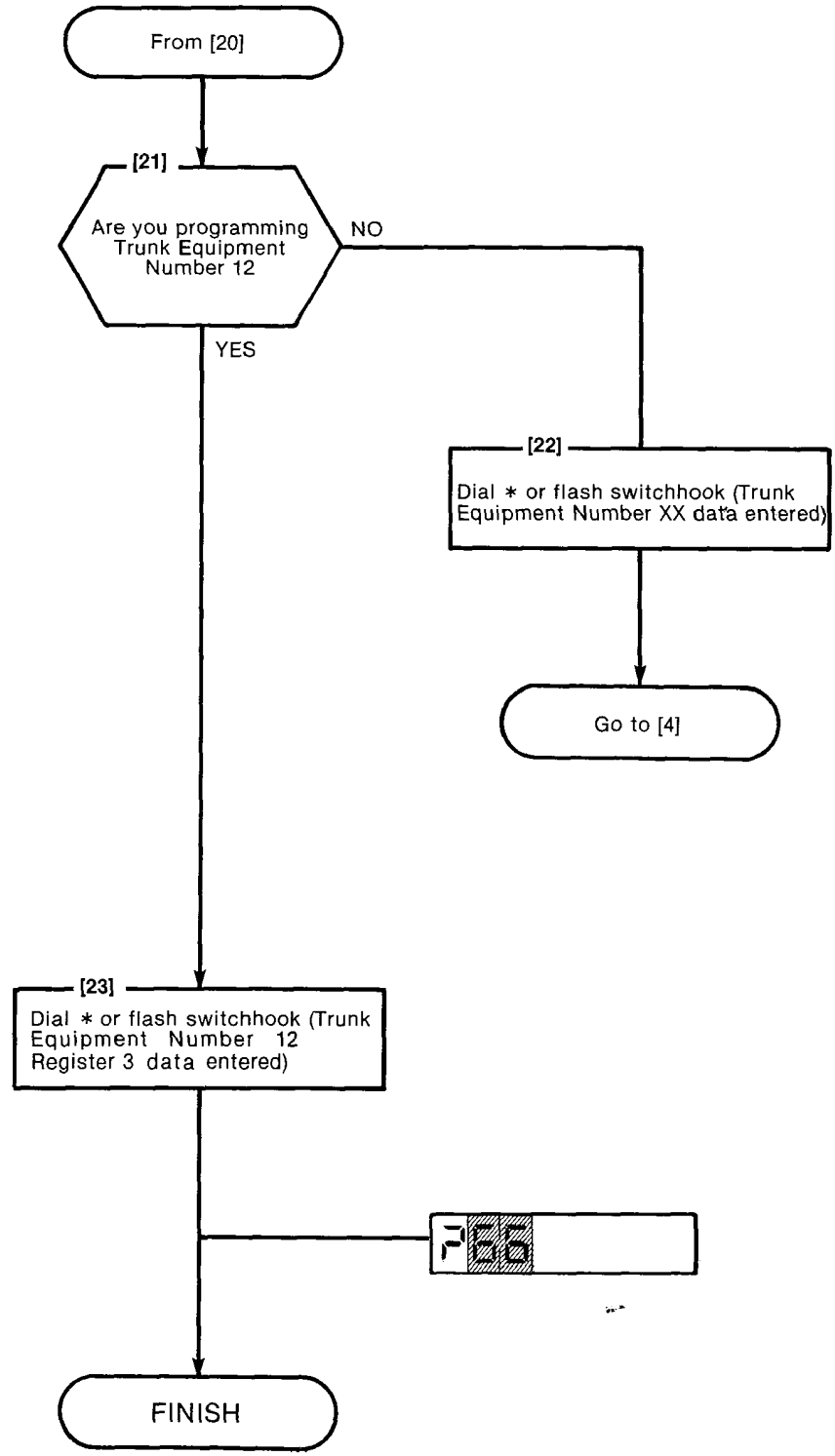

COS PROGRAMMING
MAP210-008
Issue 1, May 1980
Sheet 1 of 7

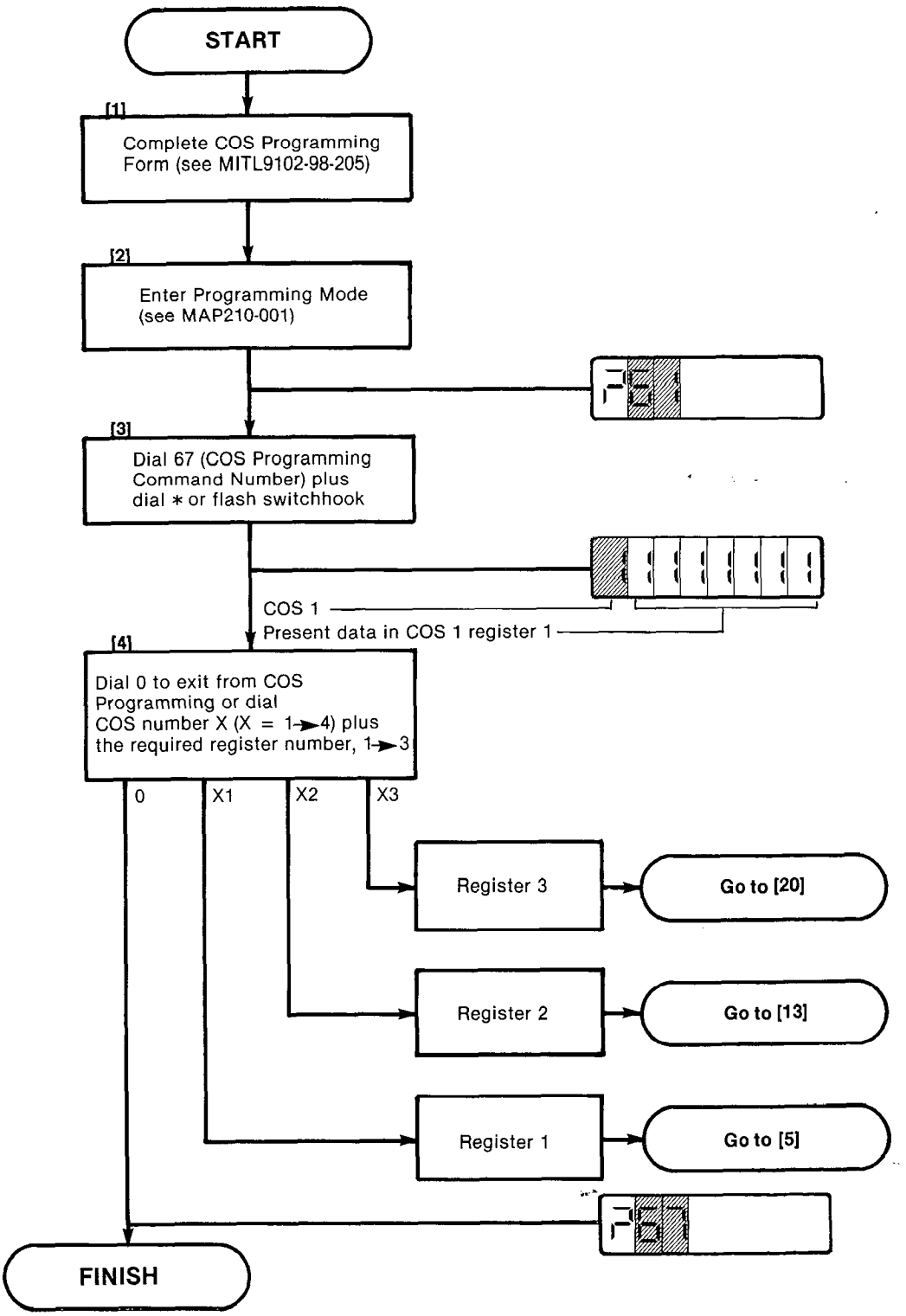

COS PROGRAMMING
MAP210-008
Issue 1, May 1980
Sheet 2 of 7

COS
REGISTER 1

May be programmed with
all features packages

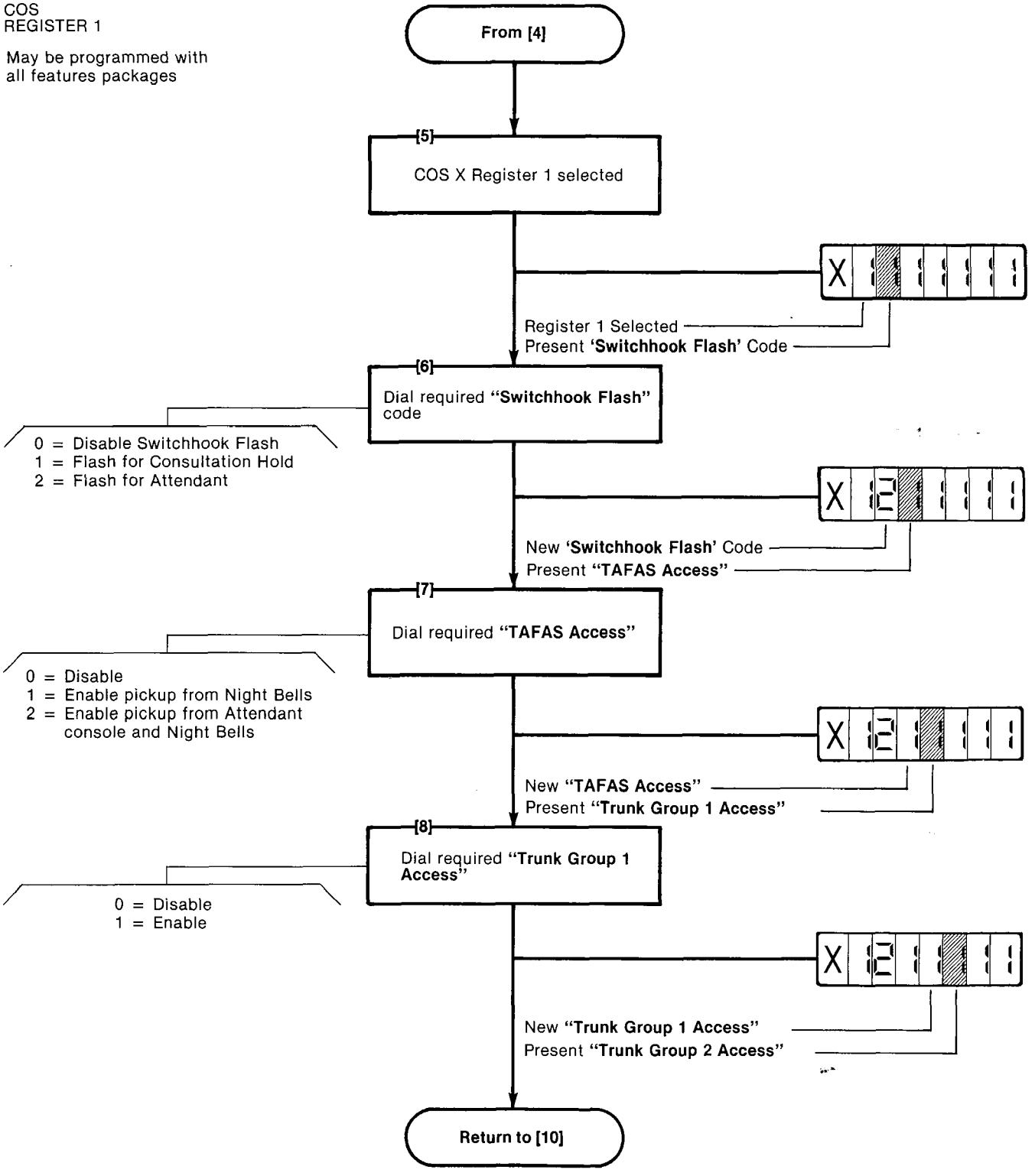

COS PROGRAMMING
MAP210-008
Issue 1, May 1980
Sheet 3 of 7

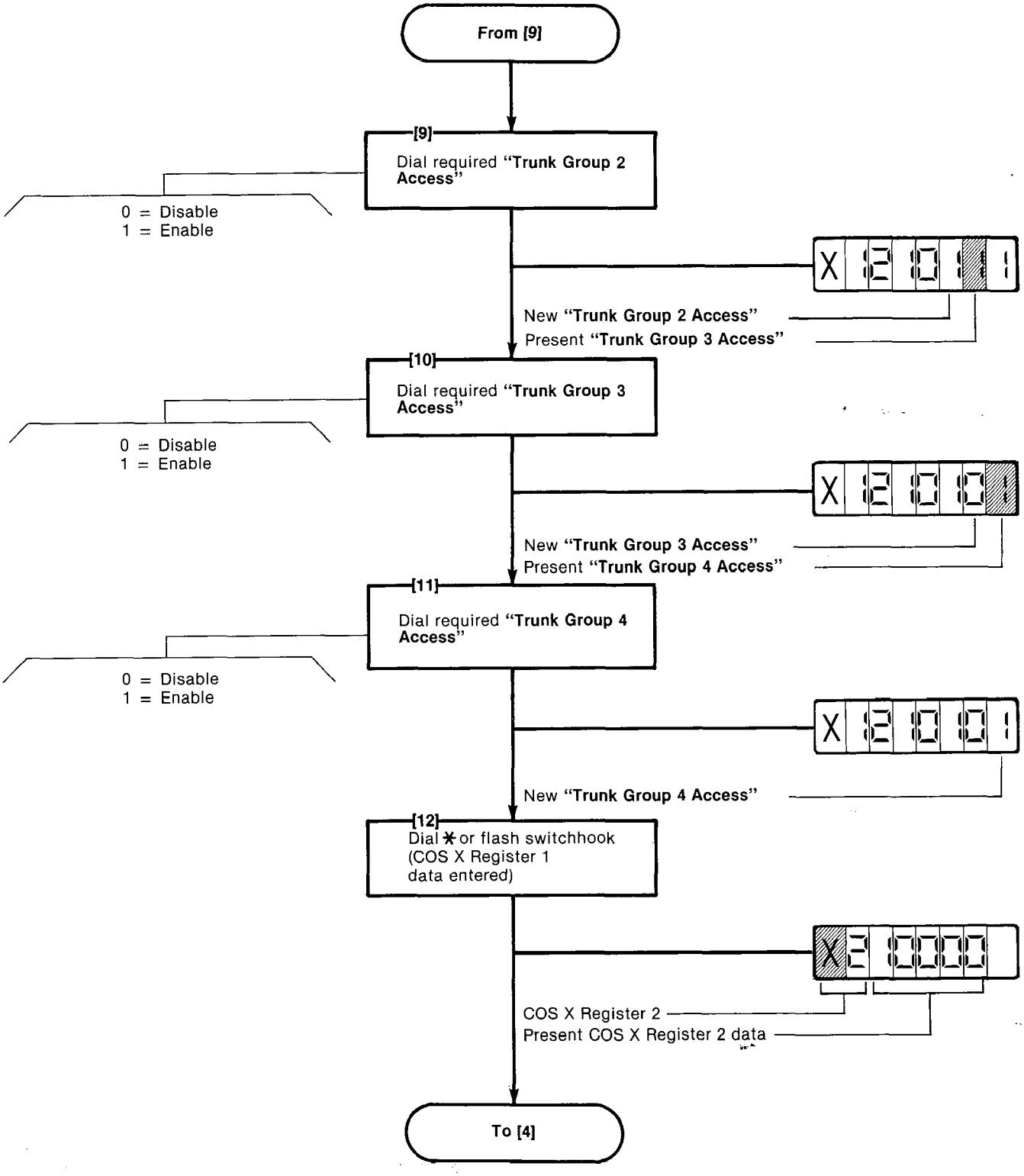

COS PROGRAMMING
MAP210-008
Issue 1, May 1980
Sheet 4 of 7

COS
REGISTER 2
(May be programmed with Hotel/Motel and Business Features Packages)

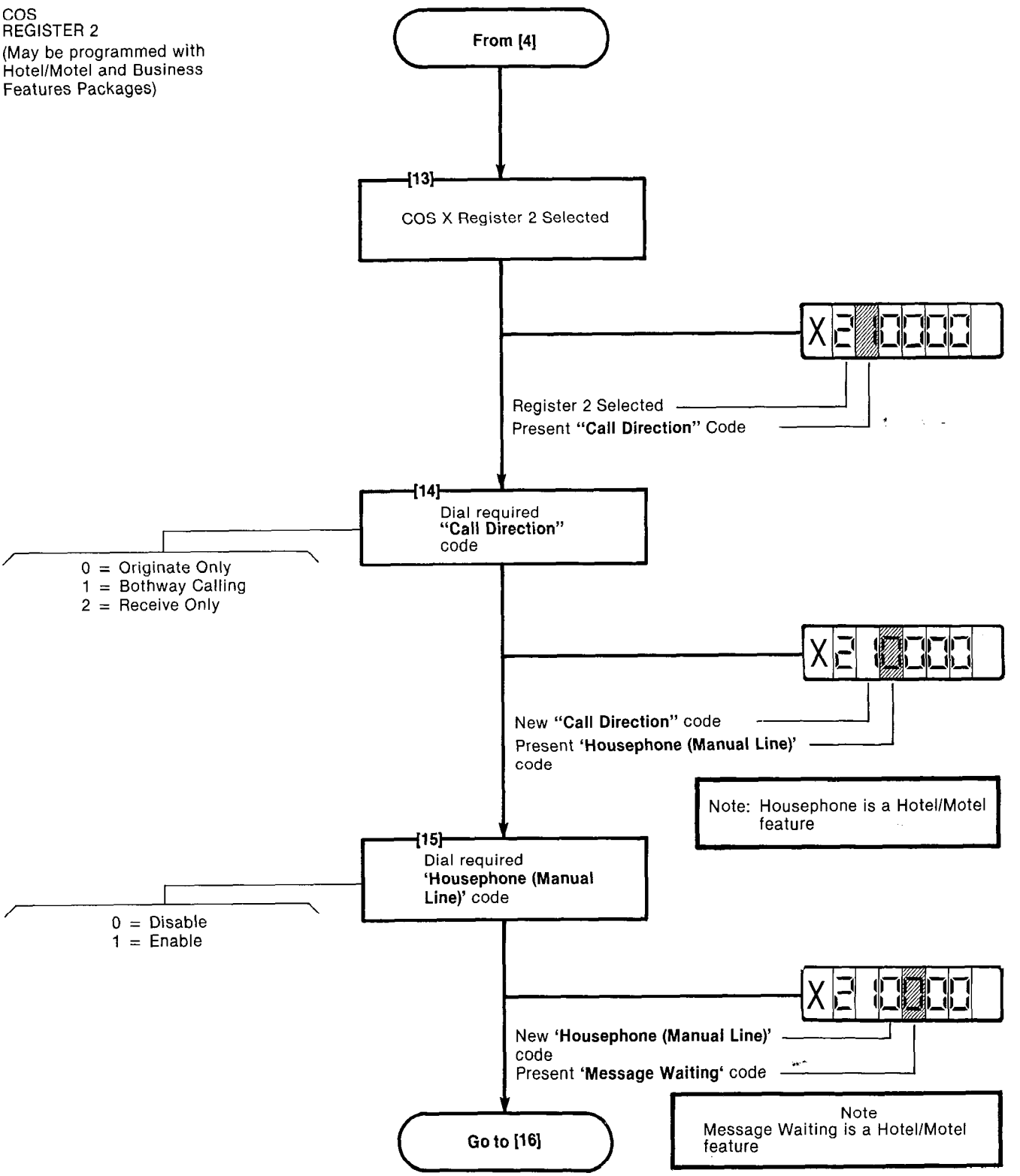

COS PROGRAMMING
MAP210-008
Issue 1, May 1980
Sheet 5 of 7

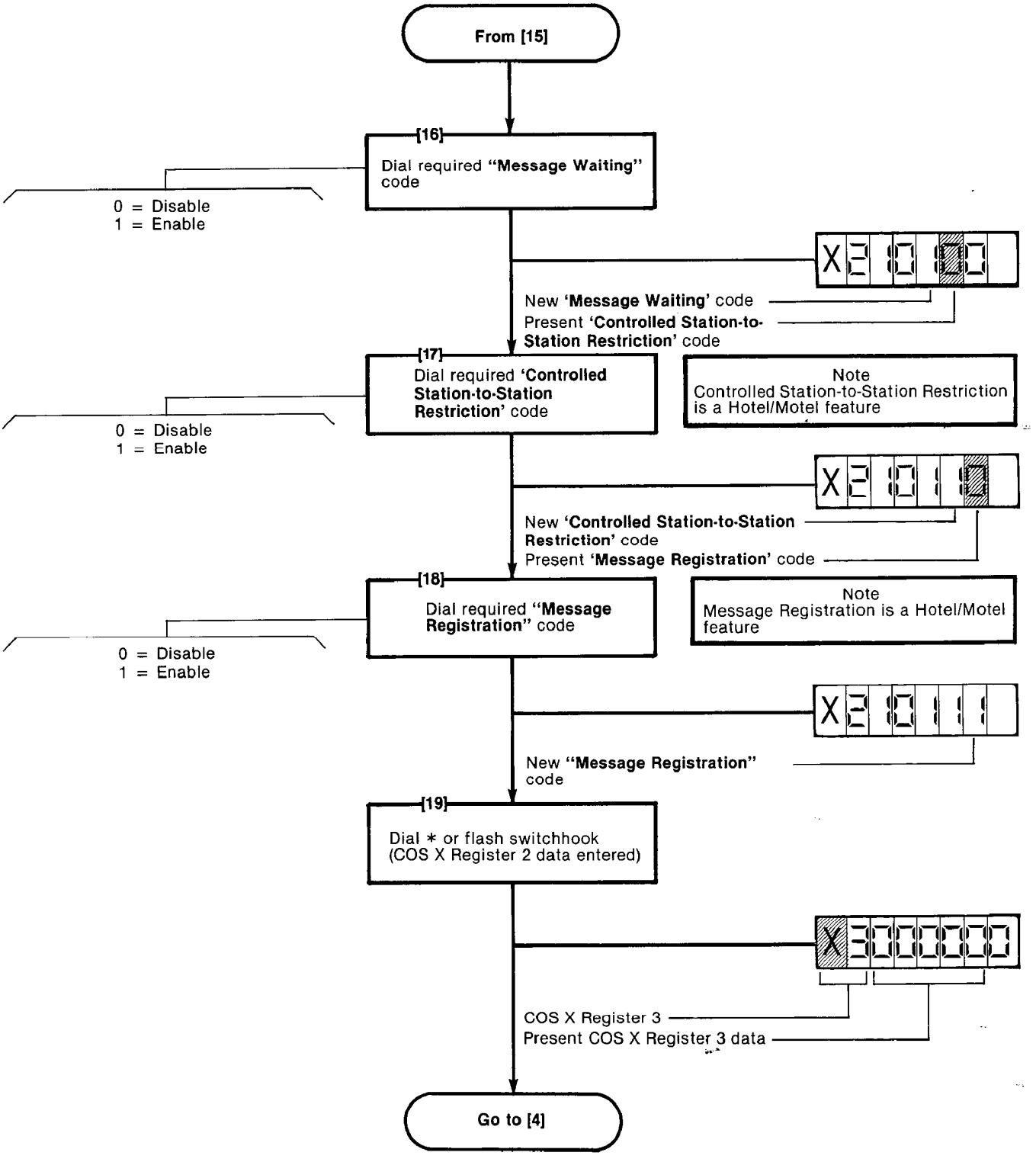

COS PROGRAMMING
MAP210-008
Issue 1, May 1980
Sheet 6 of 7

COS
REGISTER 3

May be programmed with
Hotel/Motel and Business
Features Packages

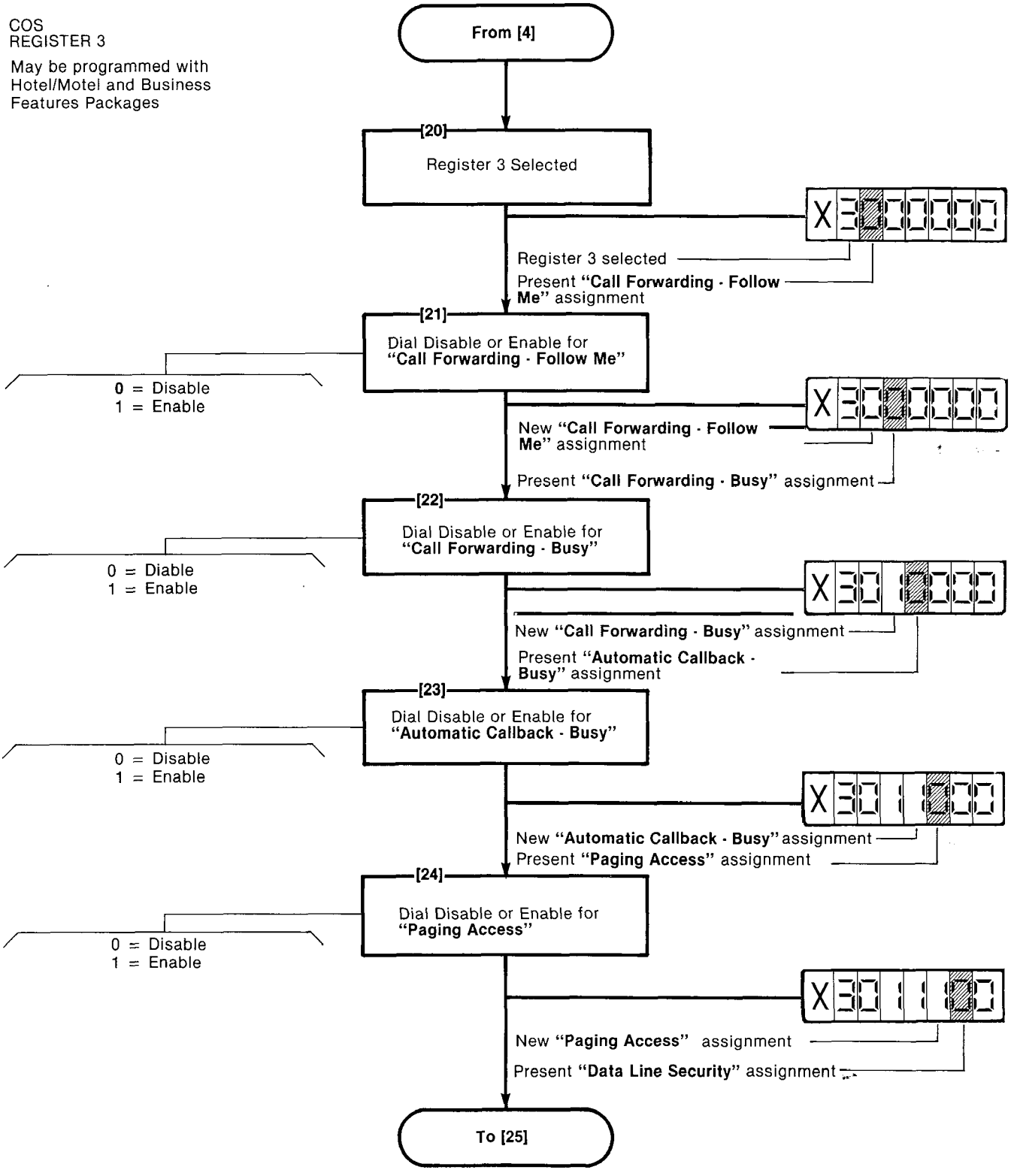

COS PROGRAMMING
MAP210-008
Issue 1, May 1980
Sheet 7 of 7

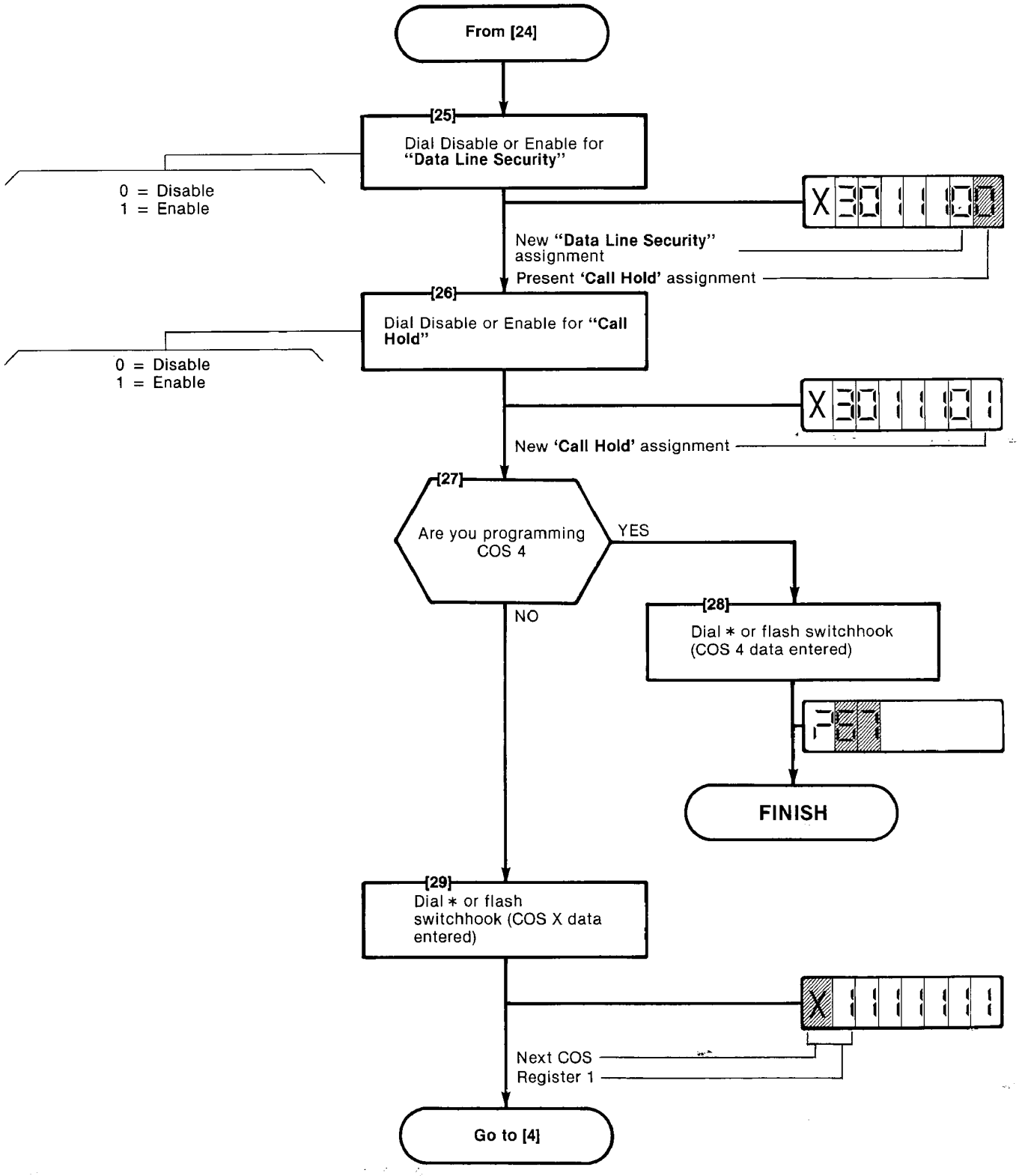

Extension Programming (Command Number 68) - each extension in the system may be programmed with a specific COS, Toll Restriction, Pickup Group (Business features only) and extension number (Hotel/Motel and Business features only).

EXTENSION PROGRAMMING
MAP210-009
Issue 1, May 1980
Sheet 1 of 3

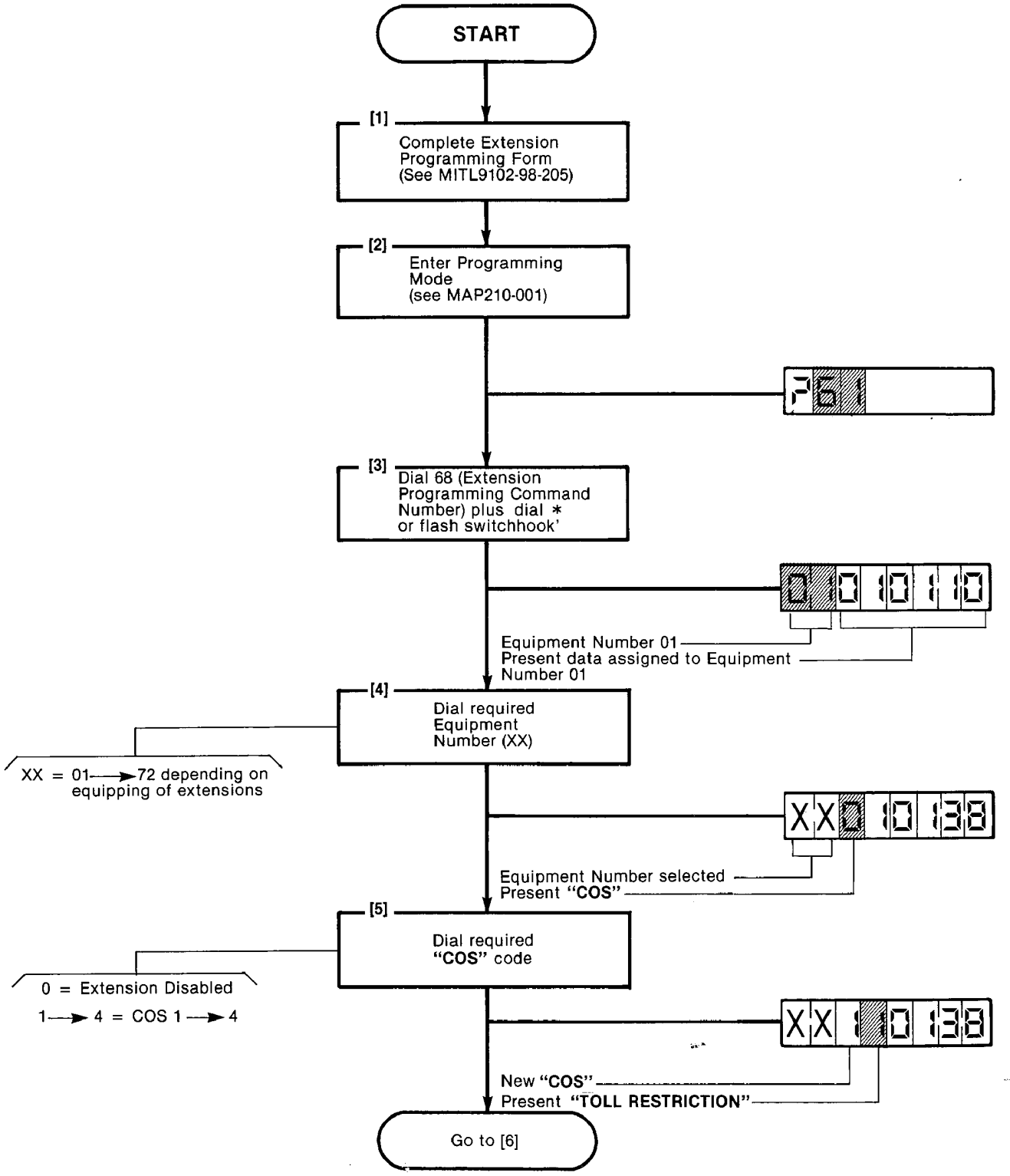

EXTENSION PROGRAMMING
MAP210-009
Issue 1, May 1980
Sheet 2 of 3

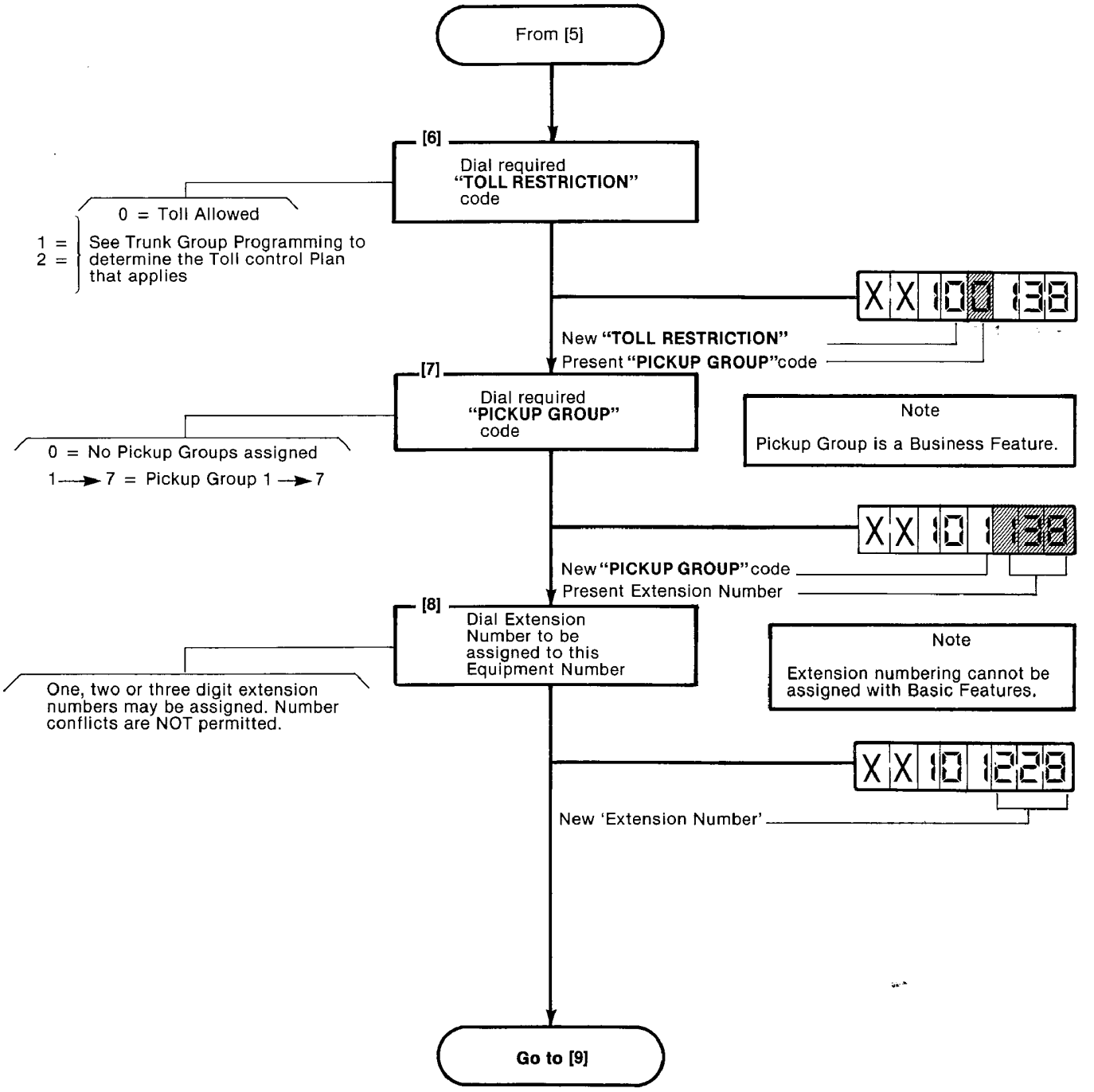

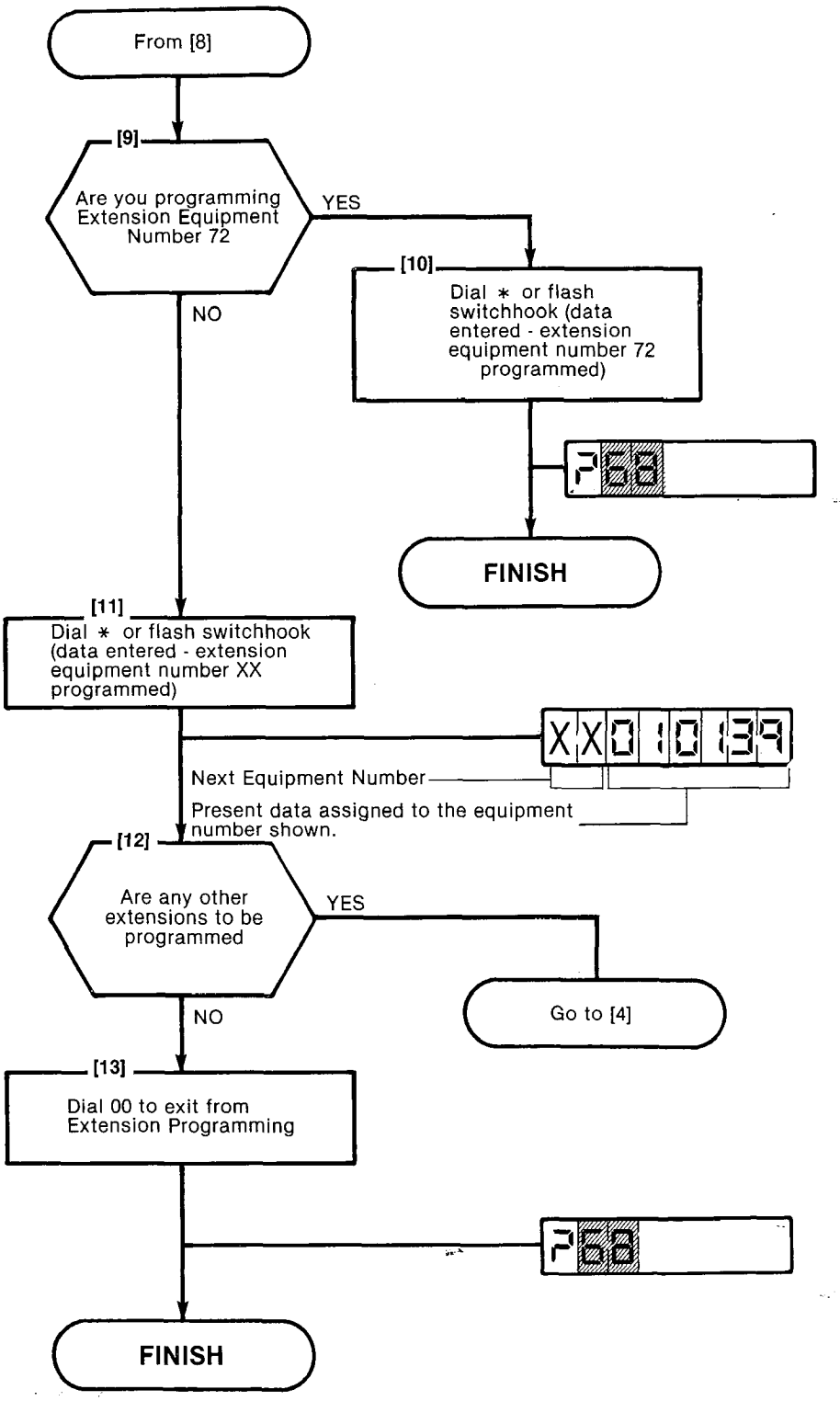
From [8]
[9]
Are you programming Extension Equipment Number 72
YES
NO
[10]
Dial * or flash switchhook (data entered - extension equipment number 72 programmed)
P88
FINISH
[11]
Dial * or flash switchhook (data entered - extension equipment number XX programmed)
XX0 10 139
Next Equipment Number
Present data assigned to the equipment number shown.
[12]
Are any other extensions to be programmed
YES
NO
Go to [4]
[13]
Dial 00 to exit from Extension Programming
P88
FINISH

EXTENSION NUMBERING - BLOCK PROGRAMMING
MAP210-010
Issue 1, May 1980
Sheet 1 of 2

Extension Numbering - Block Programming (Command Number 69) - where it is desireable to assign sequential extension numbers to sequential extension equipment numbers (i.e. a block of extensions), block programming may be used. In this case a block of numbers is assigned in the time taken to program an individual extension.

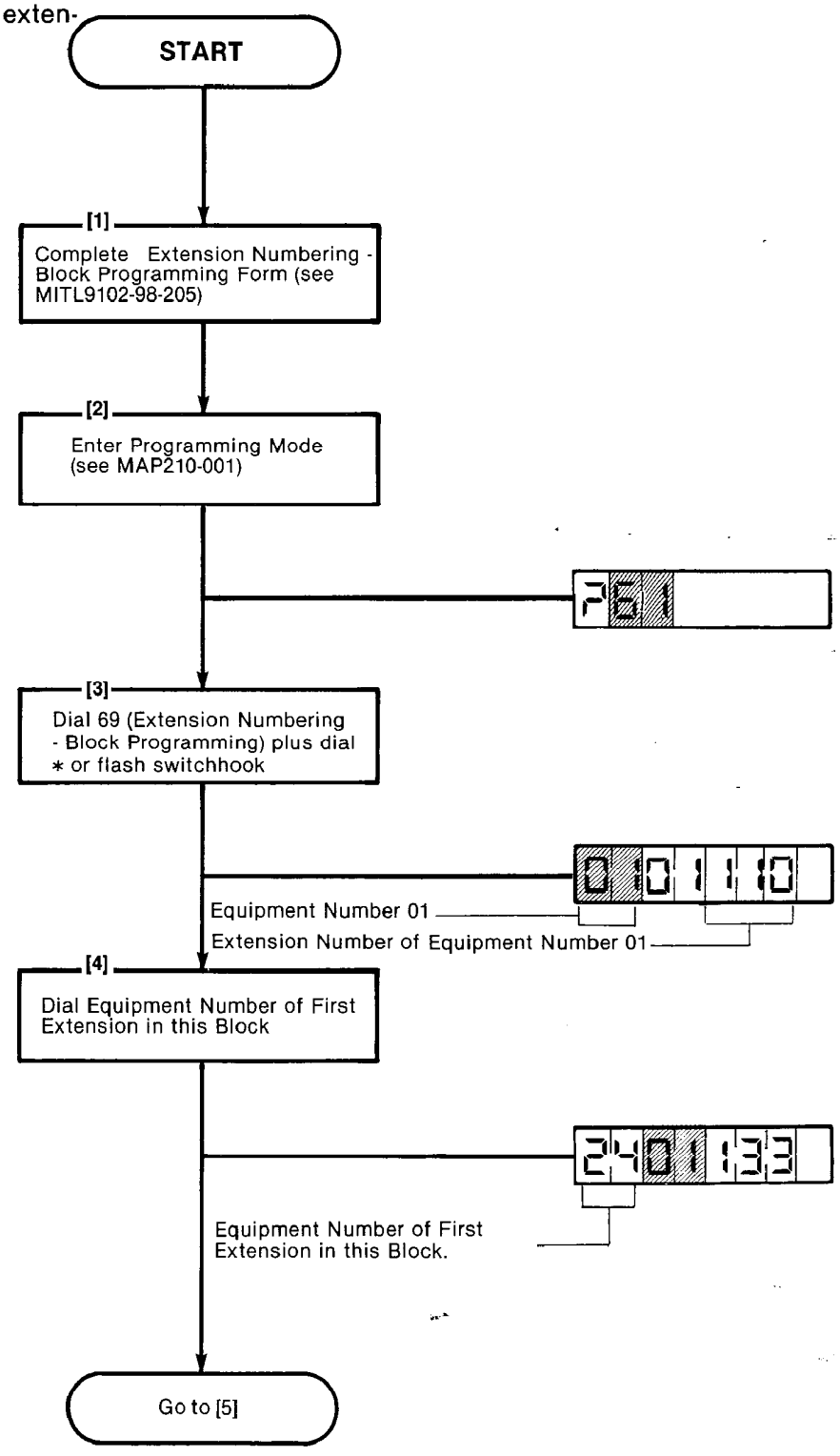

EXTENSION NUMBERING - BLOCK PROGRAMMING
MAP210-010
Issue 1, May 1980
Sheet 2 of 2

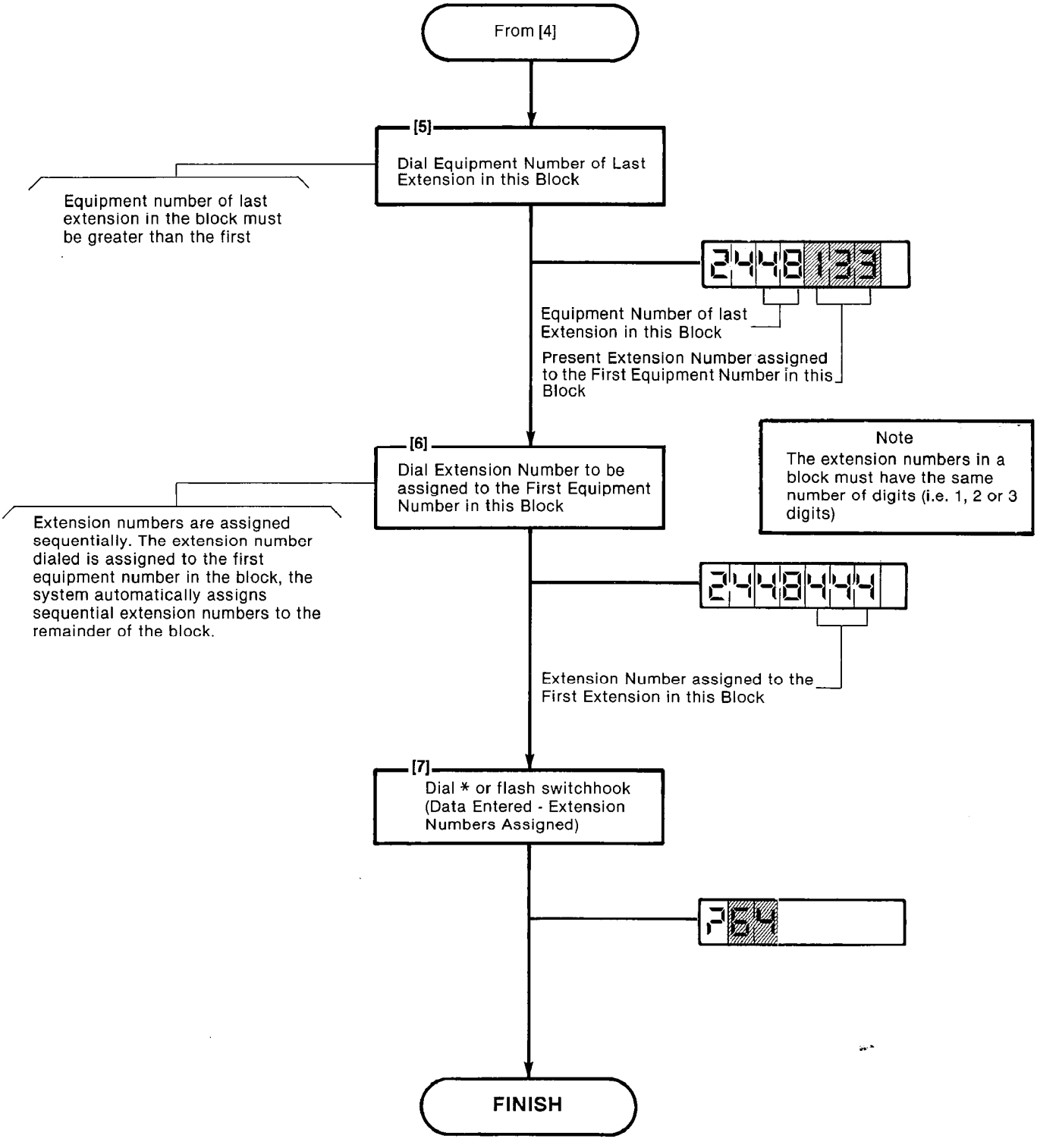

Extension COS, Toll Restriction and Pickup Group - Block Programming (Command Number 70) - this program allows the same COS, Toll Restriction and Pickup Group access to be assigned to a block of extension equipment numbers.

EXTENSION COS, TOLL RESTRICTION AND PICKUP GROUP - BLOCK PROGRAMMING
MAP210-011
Issue 1, June 1980
Sheet 1 of 2

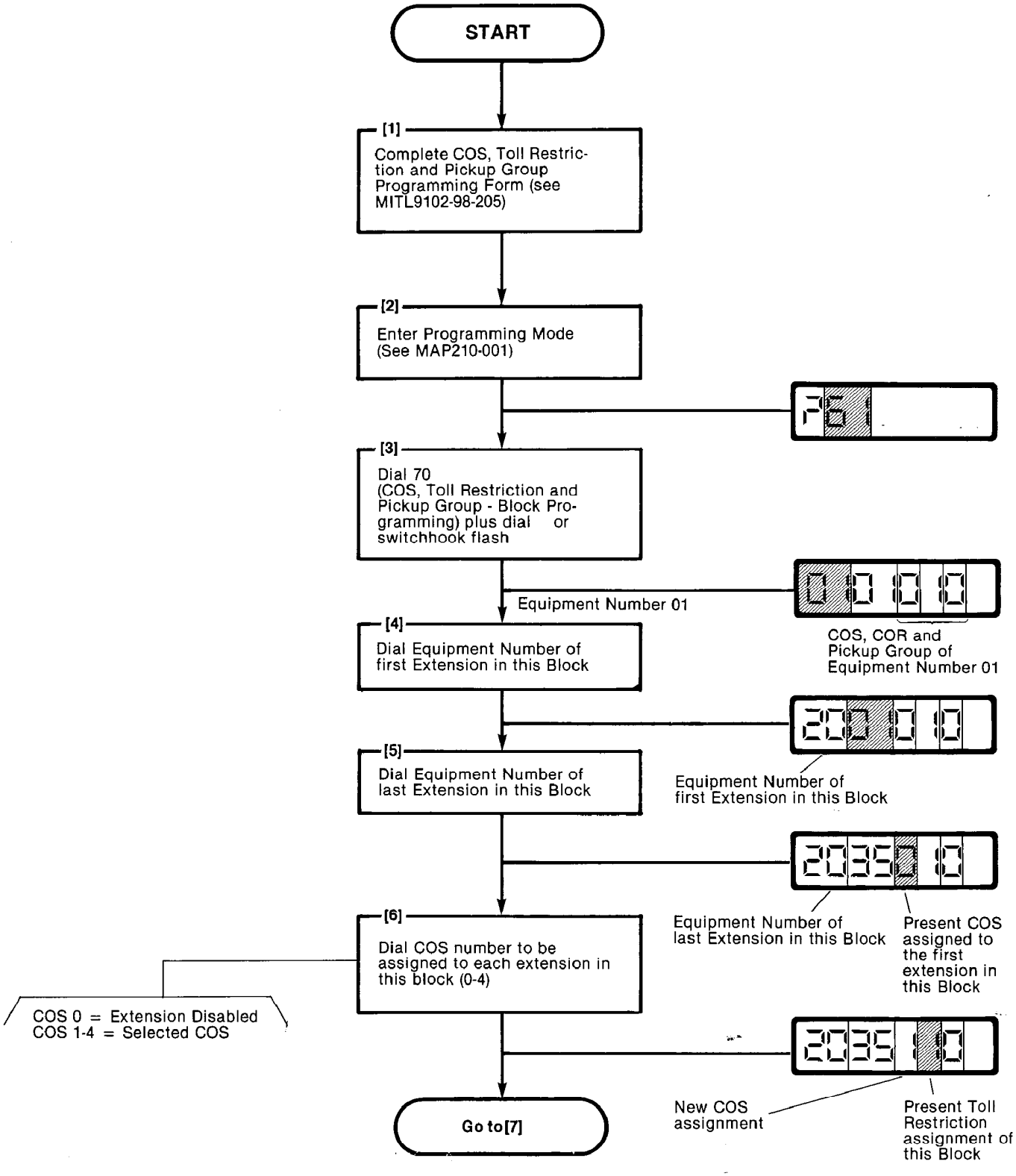

EXTENSION COS, TOLL RESTRICTION AND PICKUP GROUP - BLOCK PROGRAMMING
MAP210-011
Issue 1, June 1980
Sheet 2 of 2

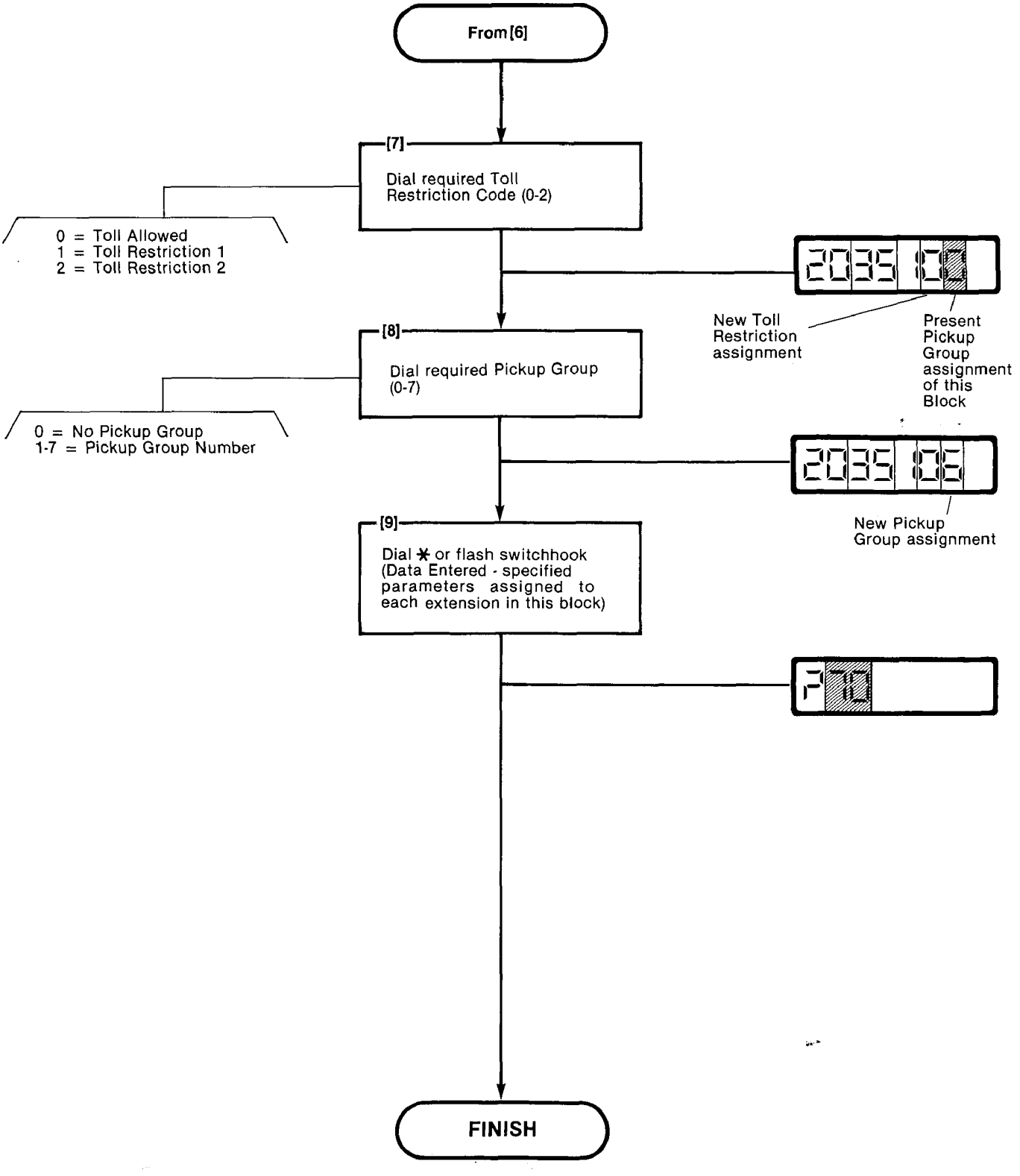

BUSY LAMP FIELD (Remote Display) PROGRAMMING
MAP210-012
Issue 1, May 1980
Sheet 1 of 2

Busy Lamp Field (Remote Display) Programming (Command Number 71) - in the Hotel/Motel and Business features packages the extension numbers displayed on the Busy Lamp Field (of the Remote Display) may be programmed. Command Number 71 allows the extension number (0 or a multiple of 10) assigned to the first lamp in each row of the Busy Lamp Field to be specified.

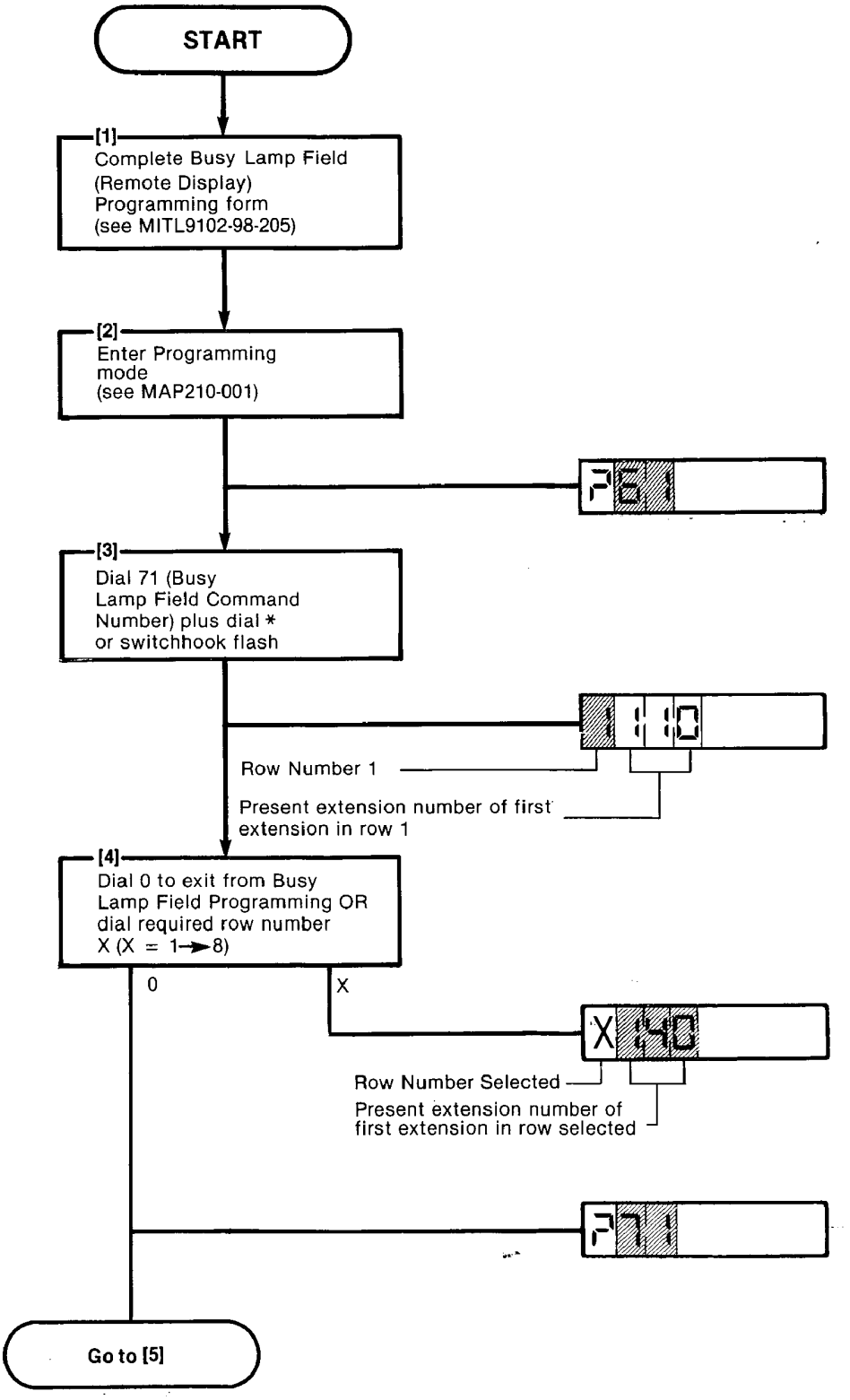

BUSY LAMP FIELD (Remote Display) PROGRAMMING
MAP210-012
Issue 1, May 1980
Sheet 2 of 2

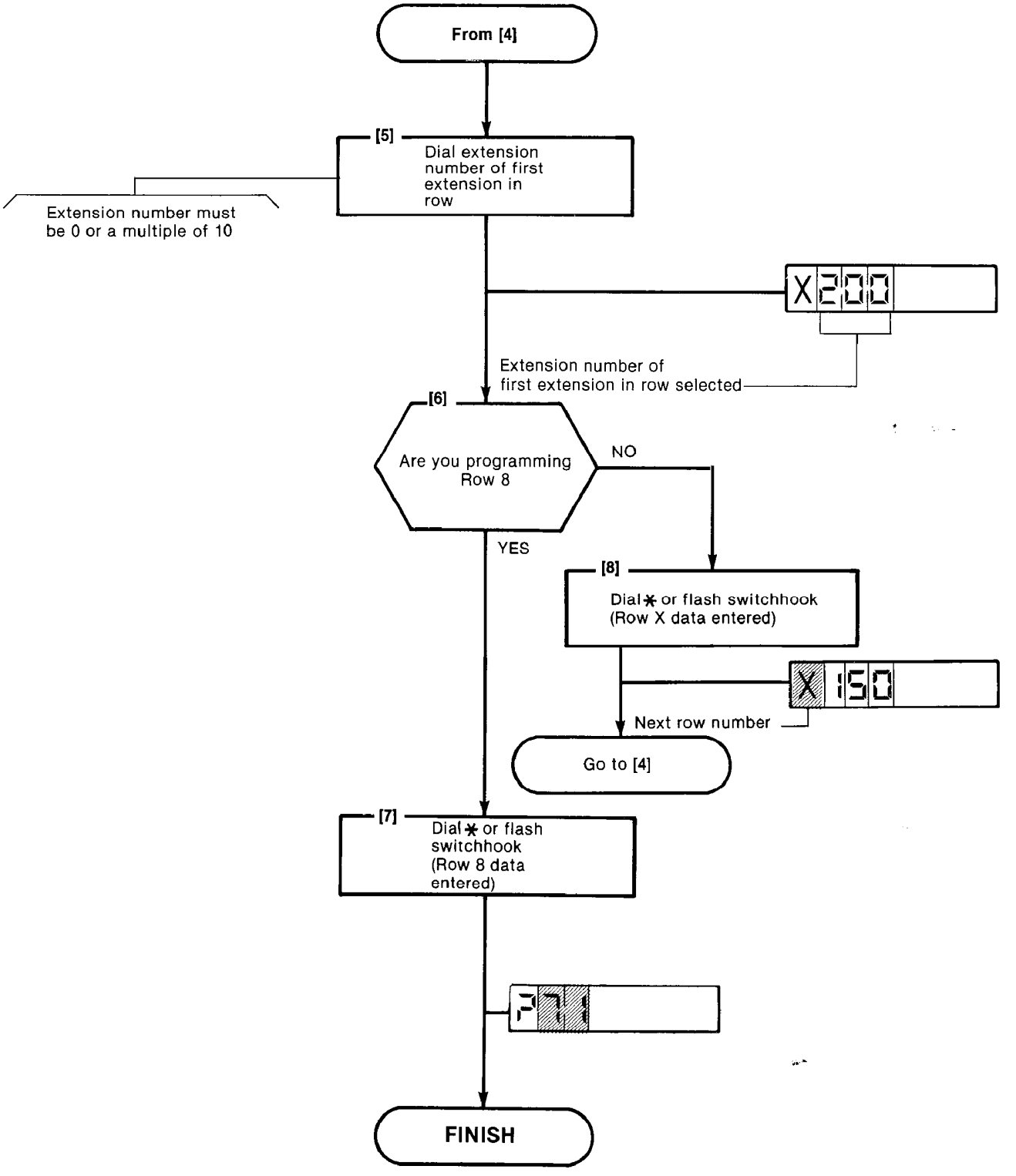

PROGRAMMING ERROR DETECTED BY THE PROGRAMMER
MAP210-050
Issue 1, June 1980
Sheet 1 of 2

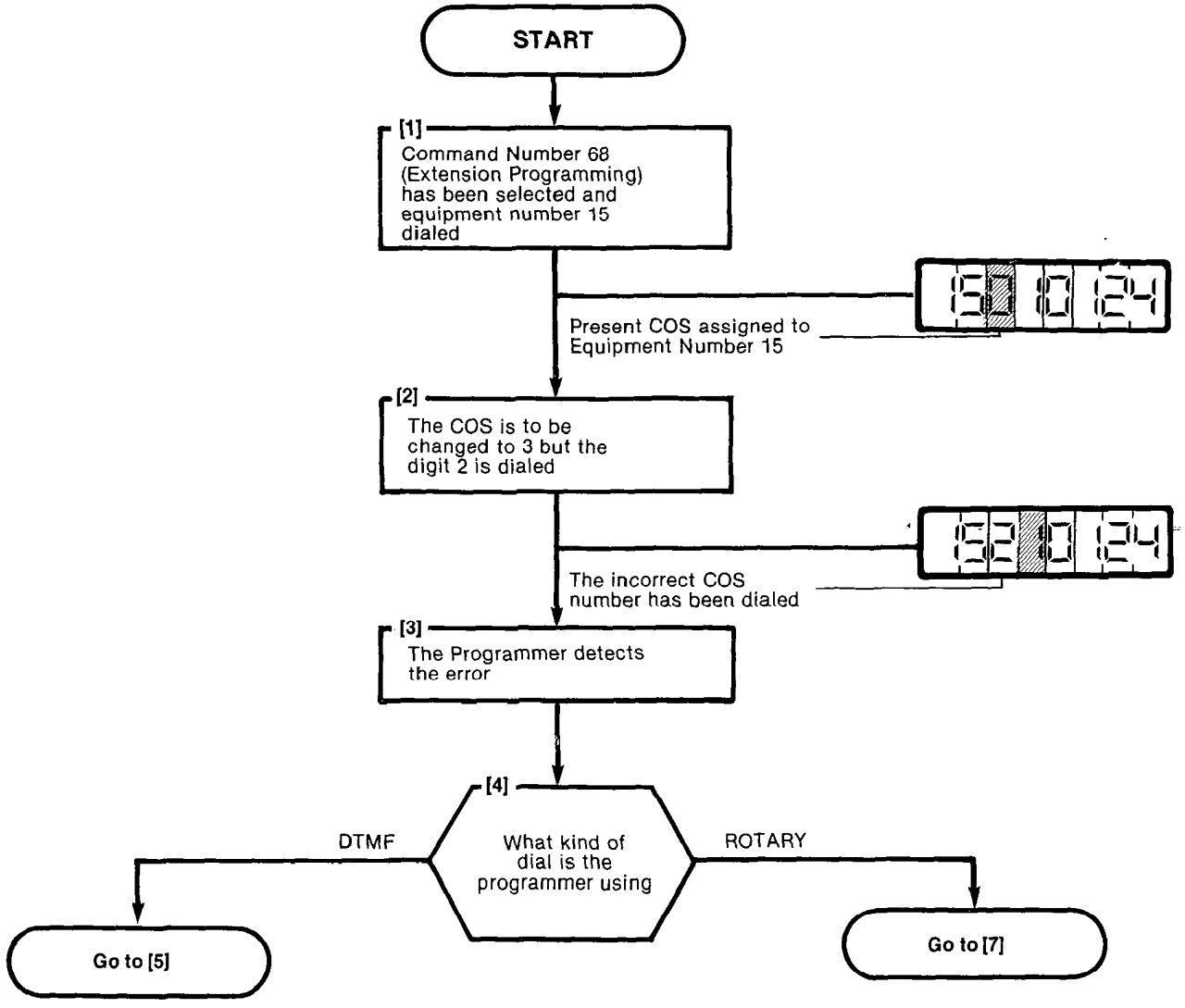

PROGRAMMING ERROR DETECTED BY THE PROGRAMMER
MAP210-050
Issue 1, June 1980
Sheet 2 of 2

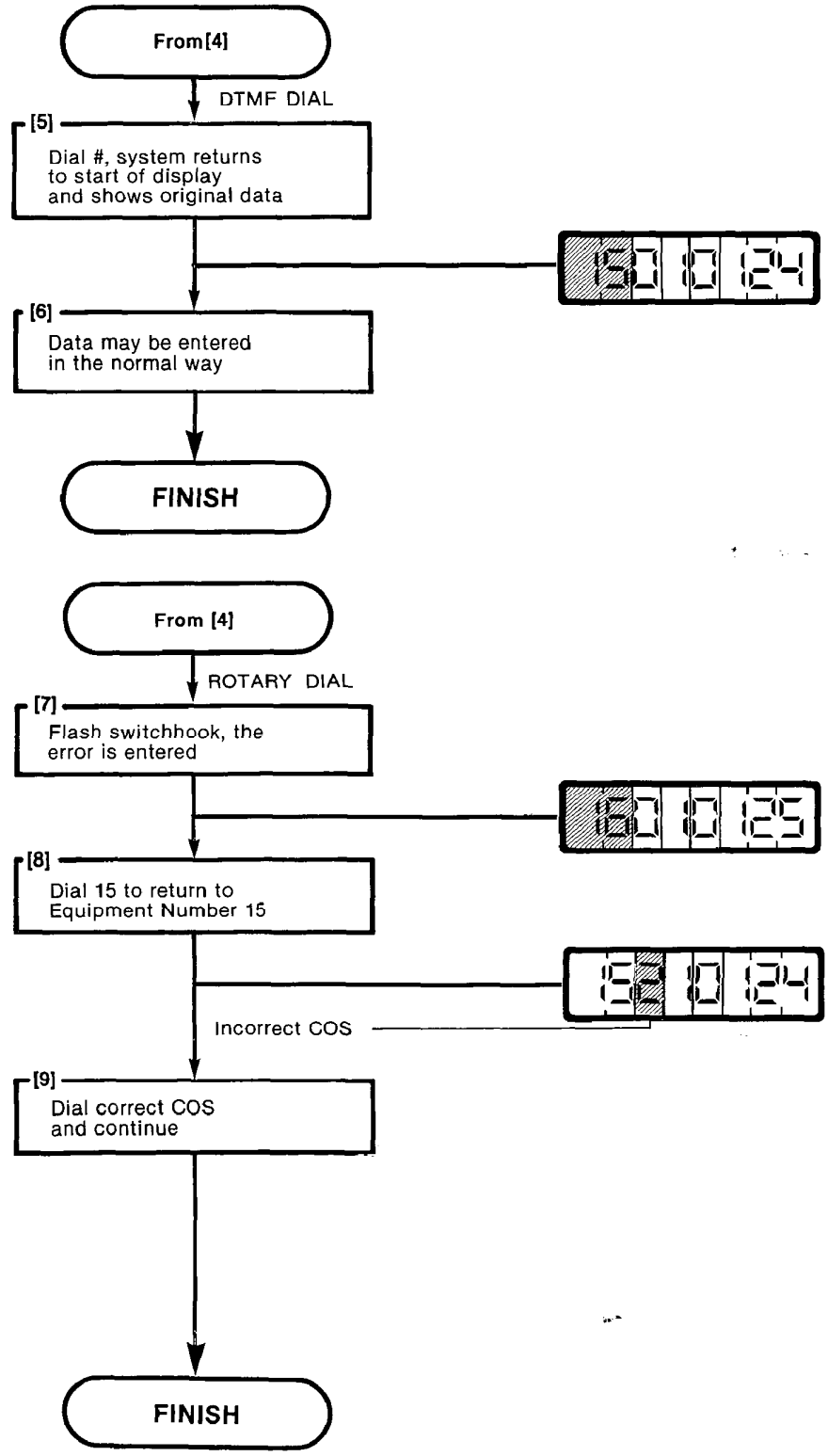

PROGRAMMING ERROR DETECTED BY THE SYSTEM
MAP210-051
Issue 1, June 1980
Sheet 1 of 2

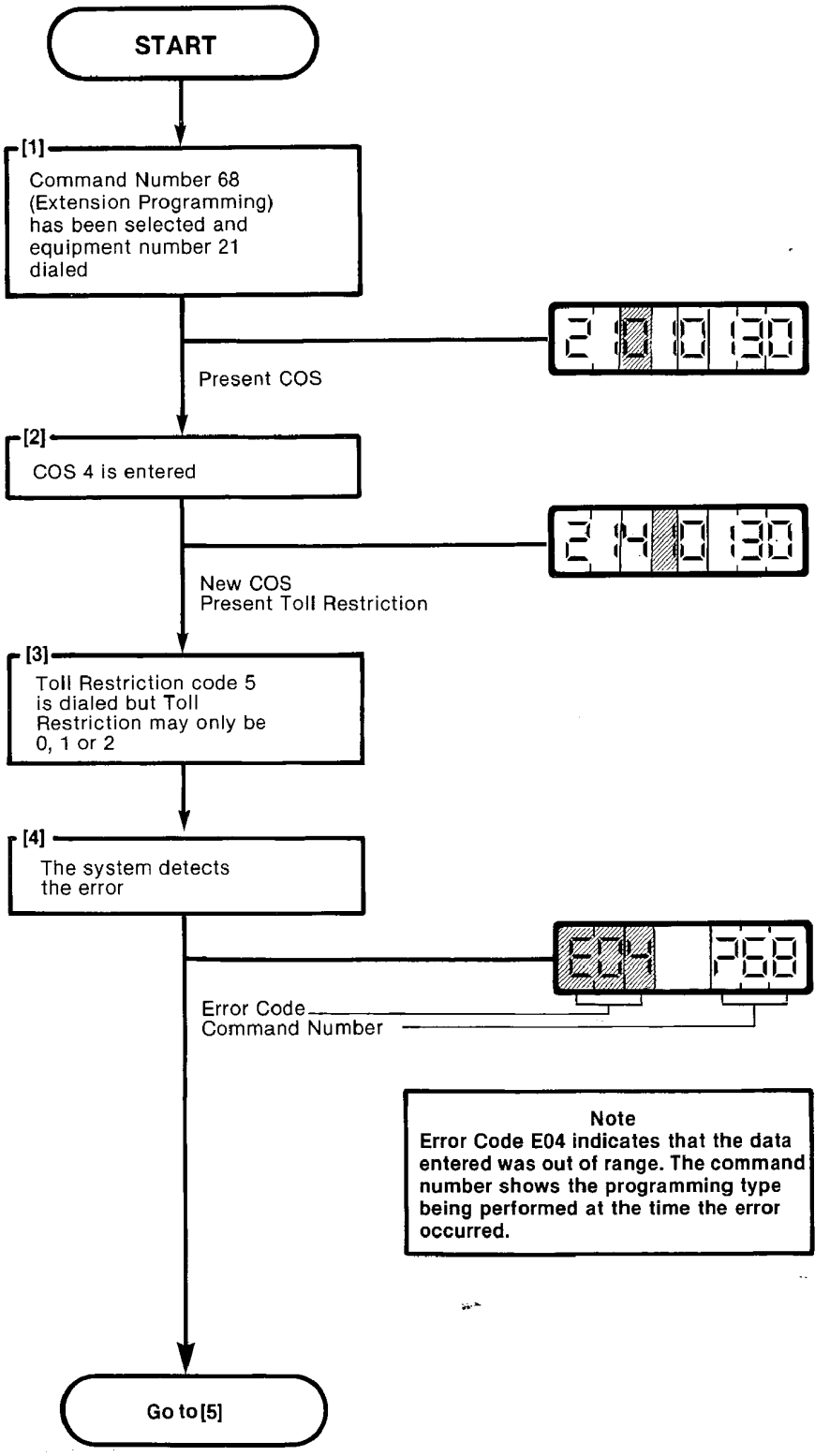

Note
Error Code E04 indicates that the data entered was out of range. The command number shows the programming type being performed at the time the error occurred.

PROGRAMMING ERROR DETECTED BY THE SYSTEM
MAP210-051
Issue 1, June 1980
Sheet 2 of 2

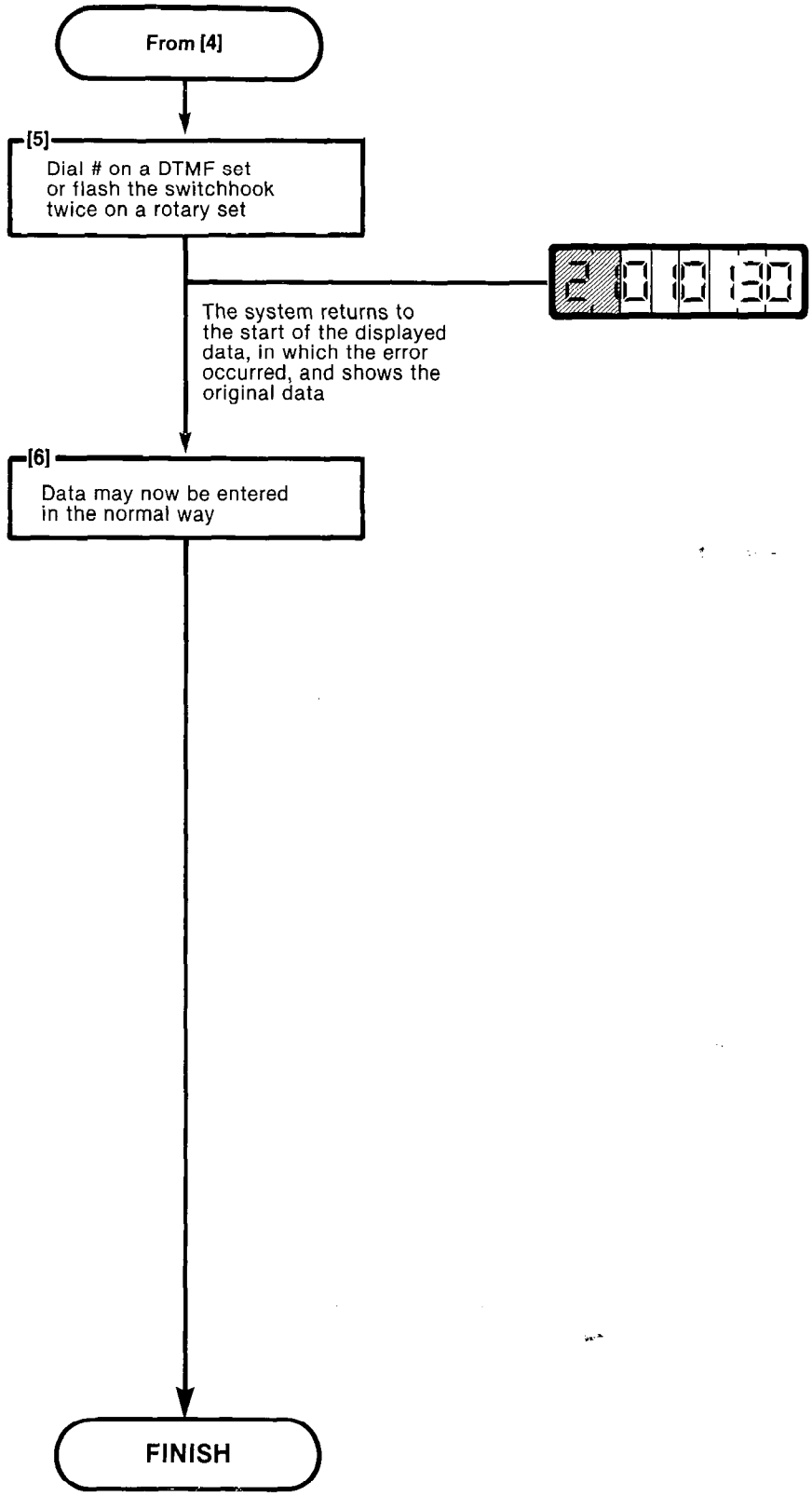

SX-20 COMMUNICATIONS SYSTEM

TROUBLESHOOTING

GENERAL

Introduction

1.01 This section contains fault location information to be used when troubleshooting the SX-20 Communications System. The section is divided into three parts, each part covering a different aspect of troubleshooting.

- Part 1 General - introduces the SX-20 troubleshooting philosophy
- Part 2 Maintenance Aids - this part introduces the maintenance and troubleshooting aids provided by the SX-20
- Part 3 Status Display and Special Functions - the use of the status display functions when troubleshooting are detailed in this part

Troubleshooting Philosophy

1.02 Troubleshooting the SX-20 Communications System is restricted to the replacement of defective printed cards or self contained units.

2. MAINTENANCE AIDS

General

2.01 The SX-20 provides two types of maintenance aids, LEDs which indicate a specific state of its associated equipment and the system display which may be used to display information indicating the condition of selected equipment.

2.02 Maitenance LEDs (Fig. 2-1).

(a) Power ON LED
This LED is located on the CPU card and when lit, indicates that the power supply is operating correctly.

(b) Watch Dog Timer LED
During normal system operations the 'Watch Dog Timer' monitors the system to ensure that the system is functioning correctly. If a malfunction is detected in the system software, the Watch Dog LED lights, the software is restarted, and if the malfunction is cleared the LED is turned off.

(c) Battery Pack LED
The LED held on the RAM Battery Pack lights to indicate that the batteries are charging and are in good condition.

(d) Equipment Busied LED
This LED is held on the Miscellaneous card and may be viewed through the status display window. During normal operation the system continuously checks its self to ensure that all circuits are operating correctly.

2.03 System Display. The system display may be used to indicate the status of selected equipment used during troubleshooting procedures as detailed in Part 3.

ATTENDANT FUNCTION CODES

General

The SX-20 provides a number of Attendant Functions Table 1, that may be accessed via the Attendant Console or the Test Line. These functions are designed for used by the attendant and the maintenance personnel. The system resources (Trunks, DTMF Generator, DTMF Receivers, Dial Tone Detectors and Speech Paths) may be 'Busied Out' by dialing the required Busy Out Code followed by the appropriate equipment number. The resource may be returned to normal service in a similar manner.

The following describes the means of access to attendant functions and each special attendant function code that is intended for use by maintenance personnel. Attendant functions, that are to be used by the attendant, are explainded in the "Console Operating Instructions" book.

A to Z KELLATRONICS, Inc.

[redacted] Tel: 800.766.3425
email: info@kellatronics.com Fax: 818.773.8899

Table 1

11		Night Service On
12		Night Service Off
*13		Alarm Reporting/Cancel Indications
14 +	(Time)	Set 12 hour clock
15 +	(Time)	Set 24 hour clock
*16		Lamp Test
17		Console Ringer On
18		Console Ringer Off
*19 +	(Trunk Equipment Number)	Access Trunks by Equipment Number
*20 +	(Trunk Equipment Number)	Trunk Emergency Release
*31		Alarm Clear/Cancel Alarm Indications
*32		Cancel All Alarms/Alarm Indications and Busy Outs
*41 +	(Trunk Equipment Number)	Busy Out Trunk
*42		Busy Out DTMF Generator
*43 +	(DTMF Receiver Number)	Busy Out DTMF Receiver
*44 +	(Dial Tone Detector Number)	Busy Out Dial Tone Detector
*45 +	(Speech Path Number)	Busy Out Speech Path
*51 +	(Trunk Equipment Number)	Unbusy Trunk
*52		Unbusy DTMF Generator
*53 +	(DTMF Receiver Number)	Unbusy DTMF Generator
*54 +	(Dial Tone Detector Number)	Unbusy Dial Tone Detector
*55 +	(Speech Path Number)	Unbusy Speech Path

* These functions are of assistance to maintenance personnel

Attendant functions can be performed from the console or the test line. If the console is used both the cabinet and remote call status displays show the necessary information (i.e. the 8 digit display). If the test line is used the cabinet display only shows the information, while the remote display is used as directed by the attendant console.

To access any attendant function it is necessary to dial * (DTMF set) or the Attendant Function Access code, at which time the display will show 'A'. The user may now input the attendant function code, etc, see below.

Alarms

There are three attendant functions associated with alarms:

13 Alarm Reporting/Cancel Indications

31 Alarm Clear/Cancel Indications

32 Cancel All Alarms, Alarm Indications and Busy Outs

The SX-20 indicates the presence of an alarm condition by the following means:

flashing the RELEASE button on the attendant console

displaying AL with the time on the system displays

closing a relay contact on the miscellaneous card (MITL9102-98-200)

Alarm Reporting/Cancel Indications (Code 13)

The most recent alarm condition is displayed, as below, and the audio-visual alarm indications are cancelled. The alarm condition is retained in the alarm store, which stores up to 8 alarms, and may be accessed using code 31.

Alarm display

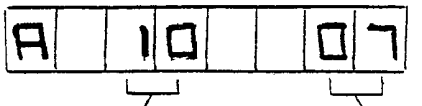

Alarm type

Device Number effected

Alarm Clear/Cancel Indications (Code 31)

The most recent alarm is displayed and deleted from the alarm store. If the audio-visual alarm indications have not previously been cancelled, this will occur. To step on and examine previous alarms dial any digit. When the alarm store is empty the following will be displayed.

A L - - - -

Cancel All Alarms, Alarm Indications and Busy Outs (Code 32)

Cancels all alarms in the alarm store, all audio-visual indications and all busy outs. This function restarts the system diagnostics. As a result of cancelling all busy outs the 'equipment busied' lamp will be unlit.

Lamp Test (Code 16)

The lamp test causes all lamps on the system displays, apart from the cabinet busy lamp field for stations, to be lit. All lamps on the attendant console are also lit.

Trunks

There are four attendant functions associated with trunks:

19 Access Trunks by Equipment Number

20 Trunk Emergency Release

41 Busy Out Trunk

51 Unbusy Trunk

Access Trunks by Equipment Number (Code 19 + Trunk Equipment Number)

This function gives a connection to the trunk equipment number dialed. If the trunk is busied out (trunk lamp flashing) or idle (trunk lamp off) dial tone will be received from the central office. If the trunk is busy (trunk lamp lit), busy tone will be heard. A busied out trunk accessed in this way remains busied out.

Trunk Emergency Release (Code 20 + Trunk Equipment Number)

This procedure is designed to release occupied trunk circuits for emergency reasons. This procedure will disconnect callers on the trunk and should therefore be used with caution. The trunk with the equipment number dialled is now free, and may be accessed.

Busy Out Trunk (Code 41 + Trunk Equipment Number)

The trunk is busied out and its associated trunk status lamp flashes. The trunk can only be accessed from the attendant console or the test line using code 20. If the trunk is busy when this code is used it will not be busied out until it is idle.

Unbusy Trunk (Code 51 + Trunk Equipment Number)

The trunk is released using this function. The trunk status lamp may take up to 45 seconds to go 'off', at which time the trunk is idle and may be accessed in the normal way.

System Resources

There are eight attendant functions associated with system resources:

Busy Out/Unbusy	DTMF Generator
Busy Out/Unbusy	DTMF Receiver
Busy Out/Unbusy	Dial Tone Detector
Busy Out/Unbusy	Speech Path

Busy Out DTMF Generator (Code 42)

Busying out the DTMF generator causes the diagnostics to bypass all tests that make use of it. The 'equipment busied' lamp is lit indicating that a system resource is busied.

Unbusy DTMF Generator (Code 52)

The diagnostics may now do tests that involve the DTMF generator. The 'Equipment Busied' lamp is turned 'off' if the generator was the only resource busied.

Busy Out DTMF Receiver (Code 43 + DTMF Receiver Number)

Busy Out Dial Tone Detector (Code 44 + Dial Tone Detector Number)

Busy Out Speech Path (Code 45 + Speech Path Number)

The procedure for busying out each of the above resources in the same. If a resource is being used by another party it will be busied out as soon as it becomes idle. If it is idle it will be busied out immediately. If the resource is being used by the party dialling the 'busy out' code it cannot be busied out. When busied out the equipment busied lamp will be lit.

Unbusy DTMF Receiver (Code 53 + DTMF Receiver Number)

Unbusy Dial Tone Detector (Code 54 + Dial Tone Detector Number)

Unbusy Speech Path (Code 55 + Speech Path Number)

The procedure for unbusying each of the above resources is the same. After dialling the required code and equipment number the resource will be idle. The equipment busied lamp will be turned off when the last busied resource is released.

SPECIAL FUNCTIONS

There are four special functions designed as advanced maintenance aids, that may be accessed under the programming and special function procedure. These special functions are designed to provide maintenance personnel with information regarding the status of the SX-20 equipment. The four functions are:

Status Display Function - Trunks

Status Display Function - Extensions

Status Display Function - System

Software Identity Display

To Access the Status Function Display

The Status Functions Display may be accessed from the attendant console or from the test line. When accessed from the attendant console both the integral and remote displays show the status information. If the test line is used to access the status functions the integral display shows the status information, allowing the remote display to be used by the attendant to process calls in the normal manner. The procedure used to access the status data is given in Appendix 1. A detailed description of the data contained in each register is described below. The means of accessing the status displays is the same as that used during programming of customer data. The attendant console or test line may be rotary or DTMF (if the optional DTMF receiver is used).

TRUNKS

(Command Number 90)

The SX-20 'Status Display Function - Trunks' allows maintenance personnel to access specific information for each trunk in the system.

Register 1

This register allows the maintenance personnel to specify the trunk equipment number which is to be interrogated.

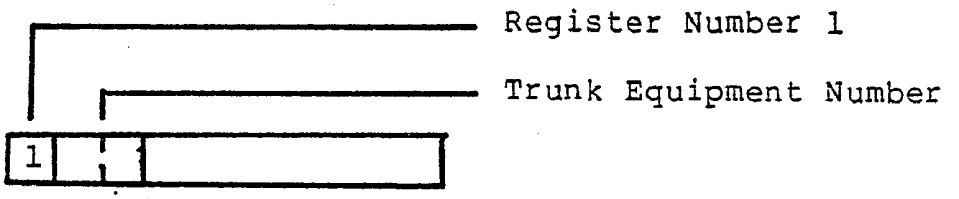

Register 2

Register 2 contains information detailing the state of the trunk software. This information is intended for in house use by MITEL, it is NOT intended for use by maintenance personnel.

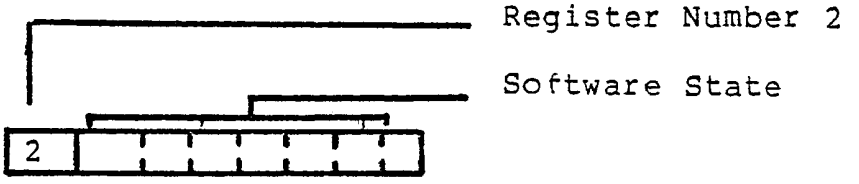

Register 3

This register shows the device numbers in use by the trunk at this time. A display of - or -- indicates that the specified device is not in use.

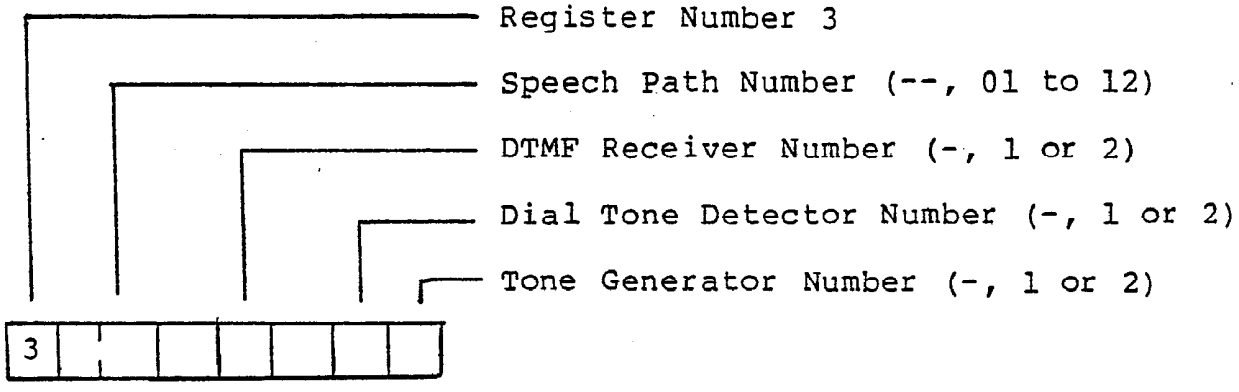

Register 4

This register displays the extension numbers (or attendant access code) of any party to which the trunk is connected. If only one party is connected with the trunk, the extension number is shown in positions 2, 3 and 4 of the display. If a second party is active in the connection, the extension number is shown in 6, 7 and 8 of the display. See the example of register 4 contents shown below.

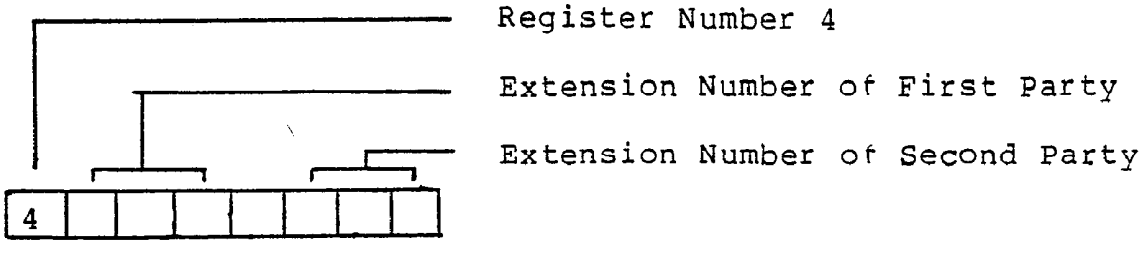

Examples of Register 4 Data

Trunk, is not connected to any extension or the attendant

Trunk is talking to or is held by attendant

Trunk is connected to extension 135 (not held by extension)

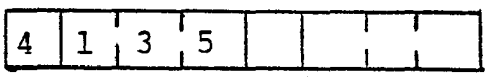

Extension 135 has added extension 168 to the connection, trunk is involved in a three way conversation

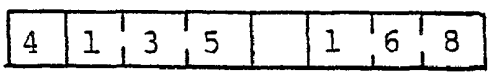

Extension 135 has released from the connection, trunk is connected to extension 168

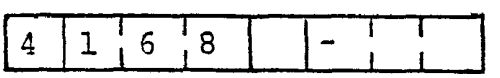

Register 5

Register 5 may be interrogated to determine specific information regarding the selected trunk.

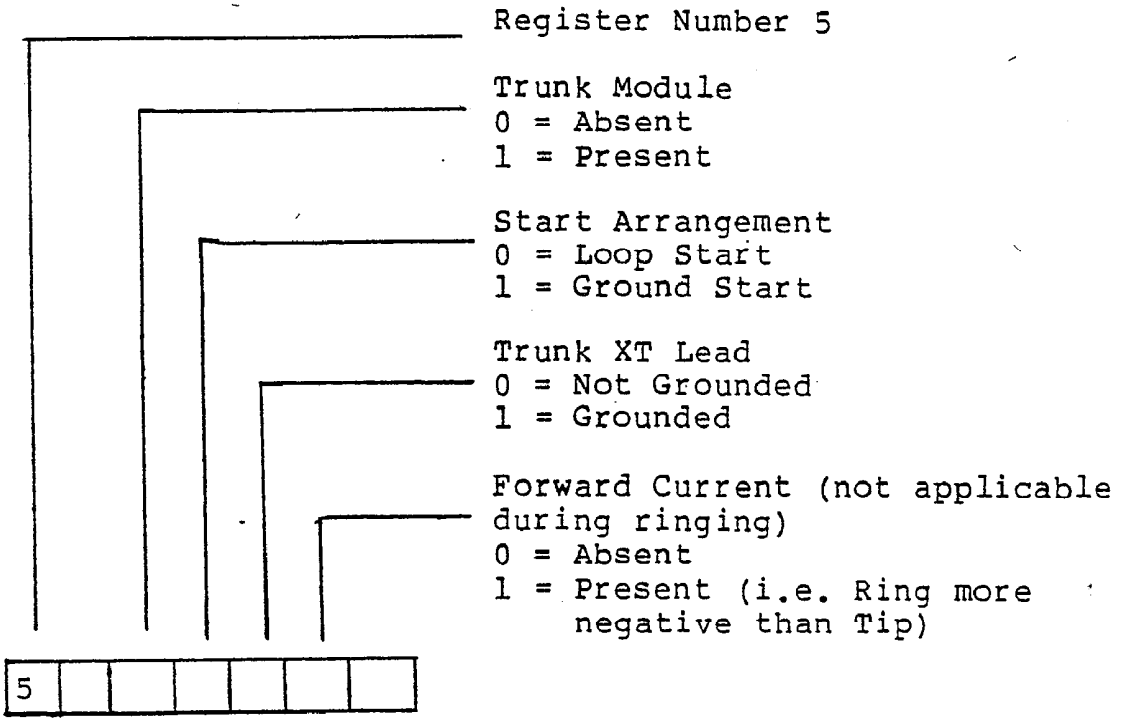

Register 6

This register provides additional data for the trunk selected.

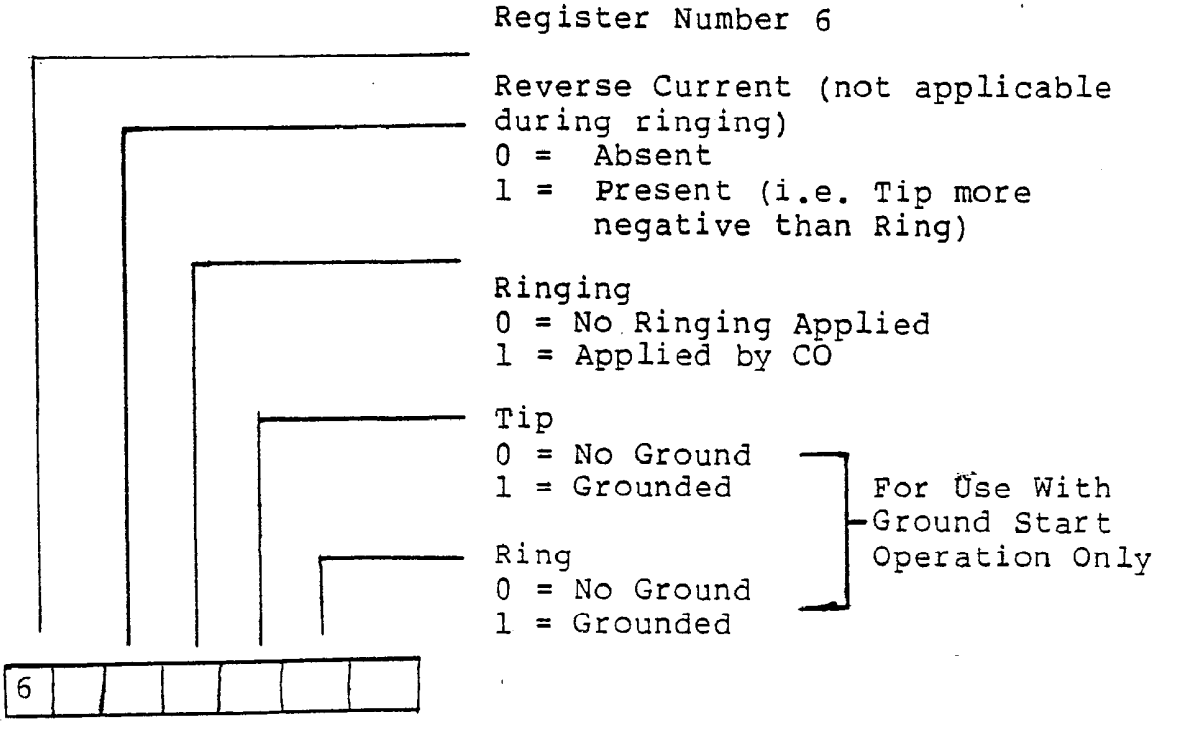

EXTENSIONS

(Command Number 91)

Command number 91 allows maintenance personnel to access and display the current status of any extension.

Register 1

This register allows maintenance personnel to specify the equipment number of the extension which is to be interrogated.

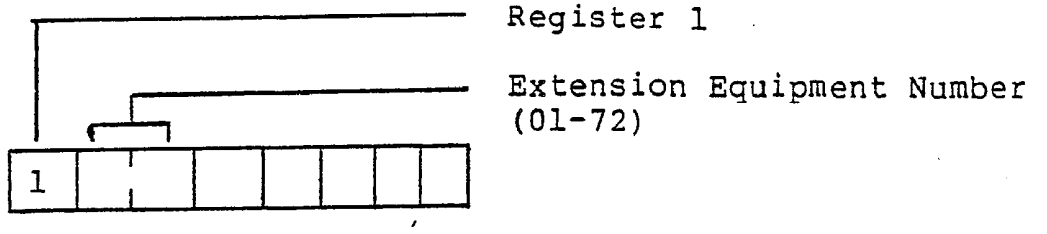

Register 2

Register 2 contains information detailing the state of the extension software. This information is intended for in house use by MITEL, it is not intended for use by maintenance personnel.

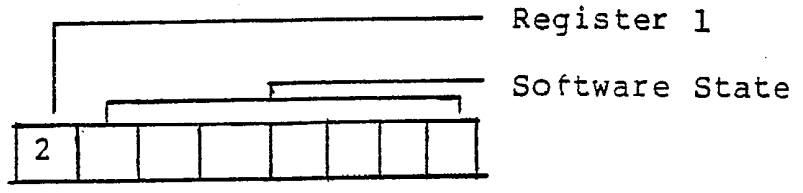

Register 3

This register is used to display the state of DTMF Receivers 1 and 2.

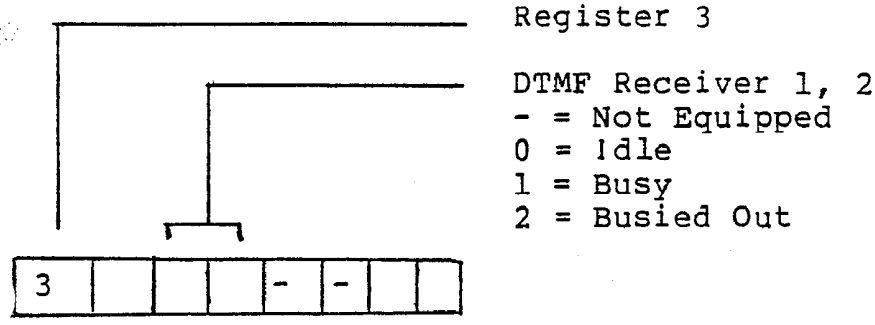

Register 4

This register displays the state of the Dial Tone Detectors and the supervisory tone generator.

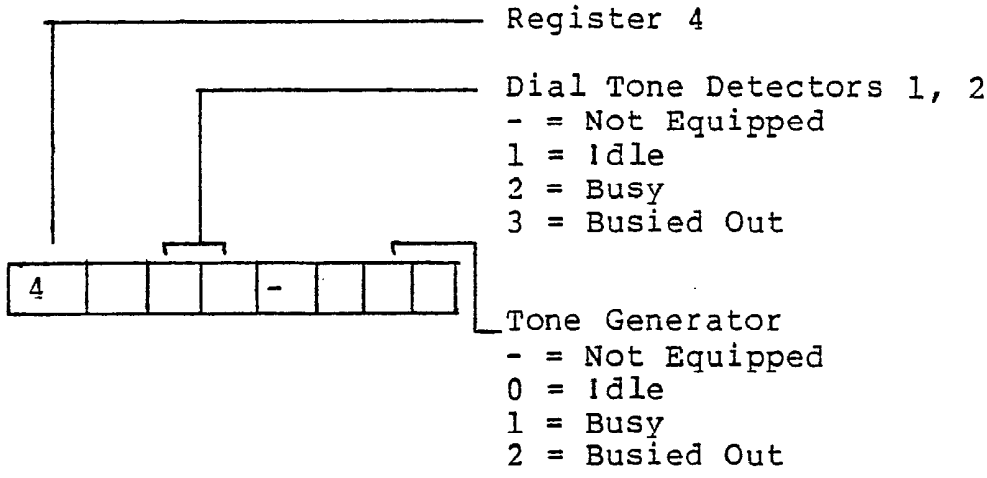

Software Identity Display (Command Number 99)

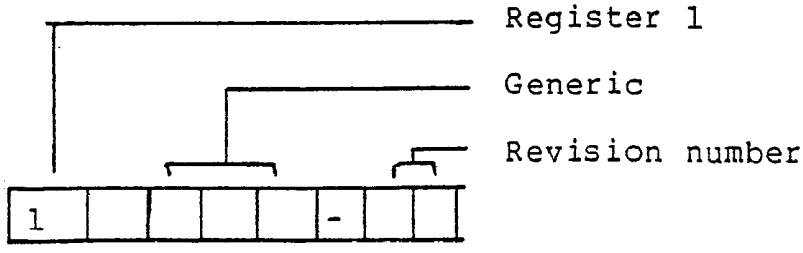

Examples of Register 4 Data

Extension is not connected to any other extension, trunk or other equipment

Extension is talking to or held by the attendant

Extension is talking to trunk 02

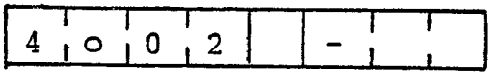

Extension is talking to trunk 02 and adds on Extension 168

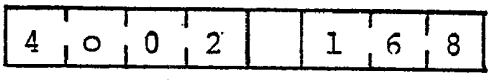

Register 5

Register 5 shows the active state of the selected extension.

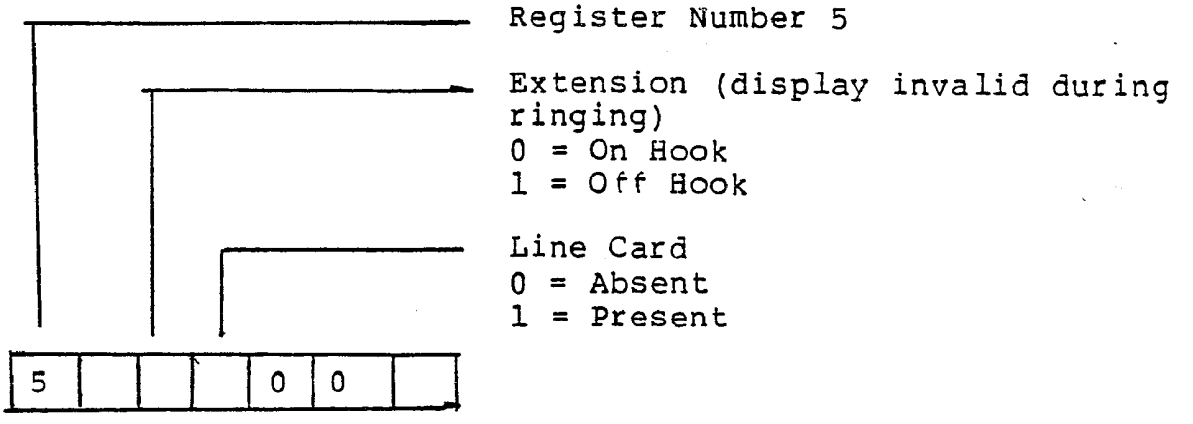

STATUS FUNCTION DISPLAY

SYSTEM

(Command Number 92)

Command Number 92 allows certain system data to be displayed.

Register 1 and Register 2

These registers allow the status of speech paths to be interrogated. Register 1 displays speech paths 1 through 6 and register 2, speech paths 7 through 12.

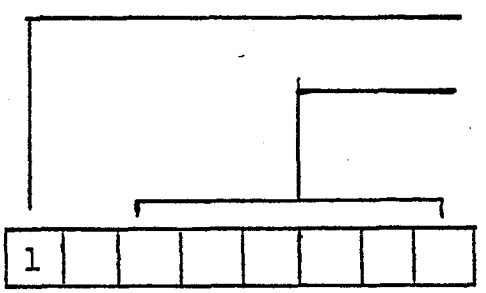

Register Number 1

Speech Path Numbers 1 through 6
0 = Idle
1 = Busy
2 = Busied Out

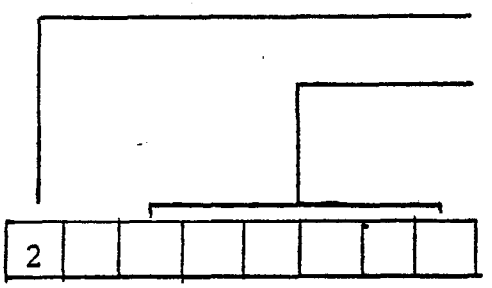

Register Number 2

Speech Path Numbers 7 through 12
0 = Idle
1 = Busy
2 = Busied Out

APPENDIX 1

SPECIAL FUNCTION ACCESS PROCEDURE

A to Z KELLATRONICS, Inc.

[redacted] Tel: 800.766.3425

email: info@kellatronics.com Fax: 818.773.8899

SPECIAL FUNCTION ACCESS PROCEDURE
MAP350-001
Issue 1, April 80
Sheet 1 of 6

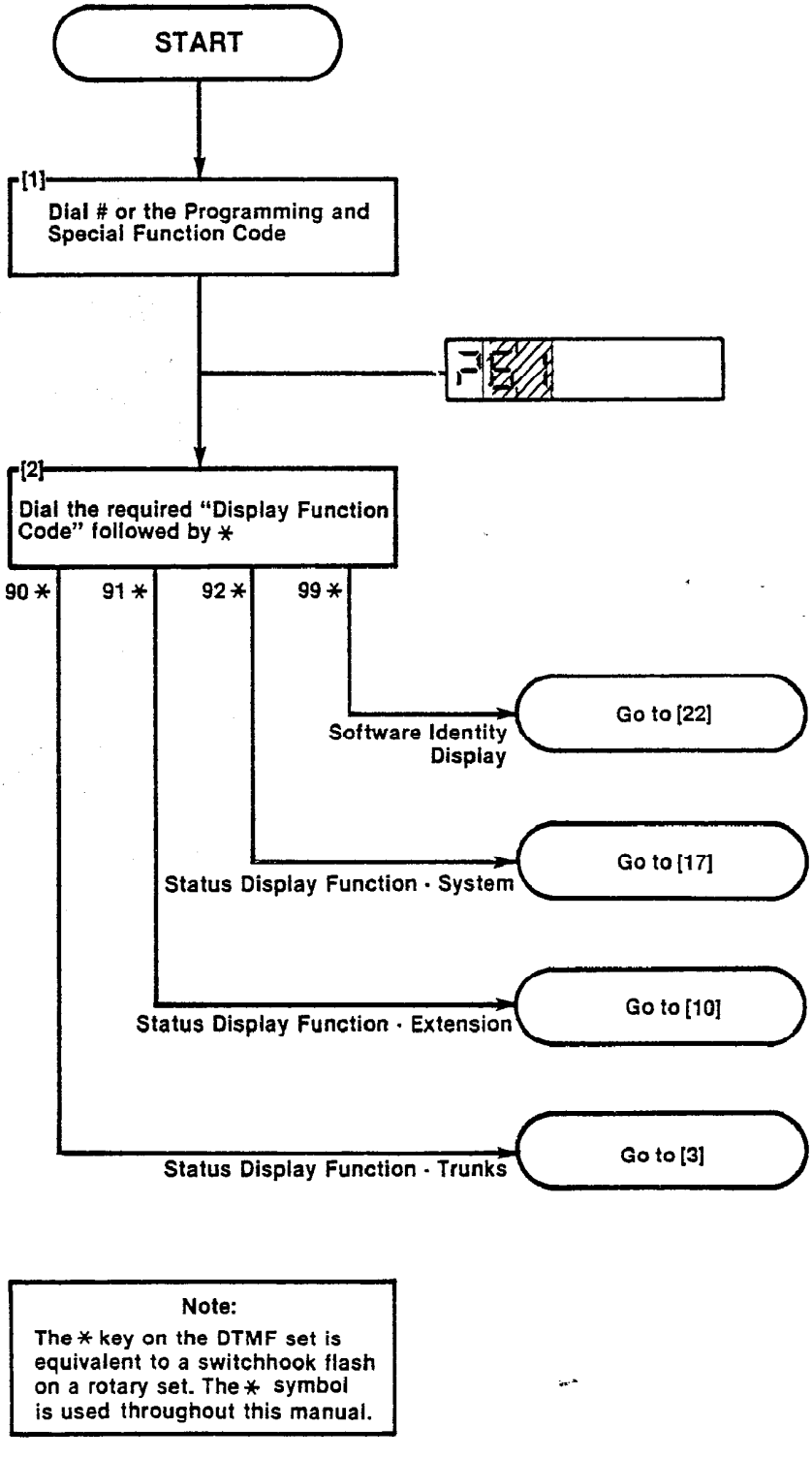

Note:
The * key on the DTMF set is equivalent to a switchhook flash on a rotary set. The * symbol is used throughout this manual.

STATUS DISPLAY FUNCTION — TRUNKS

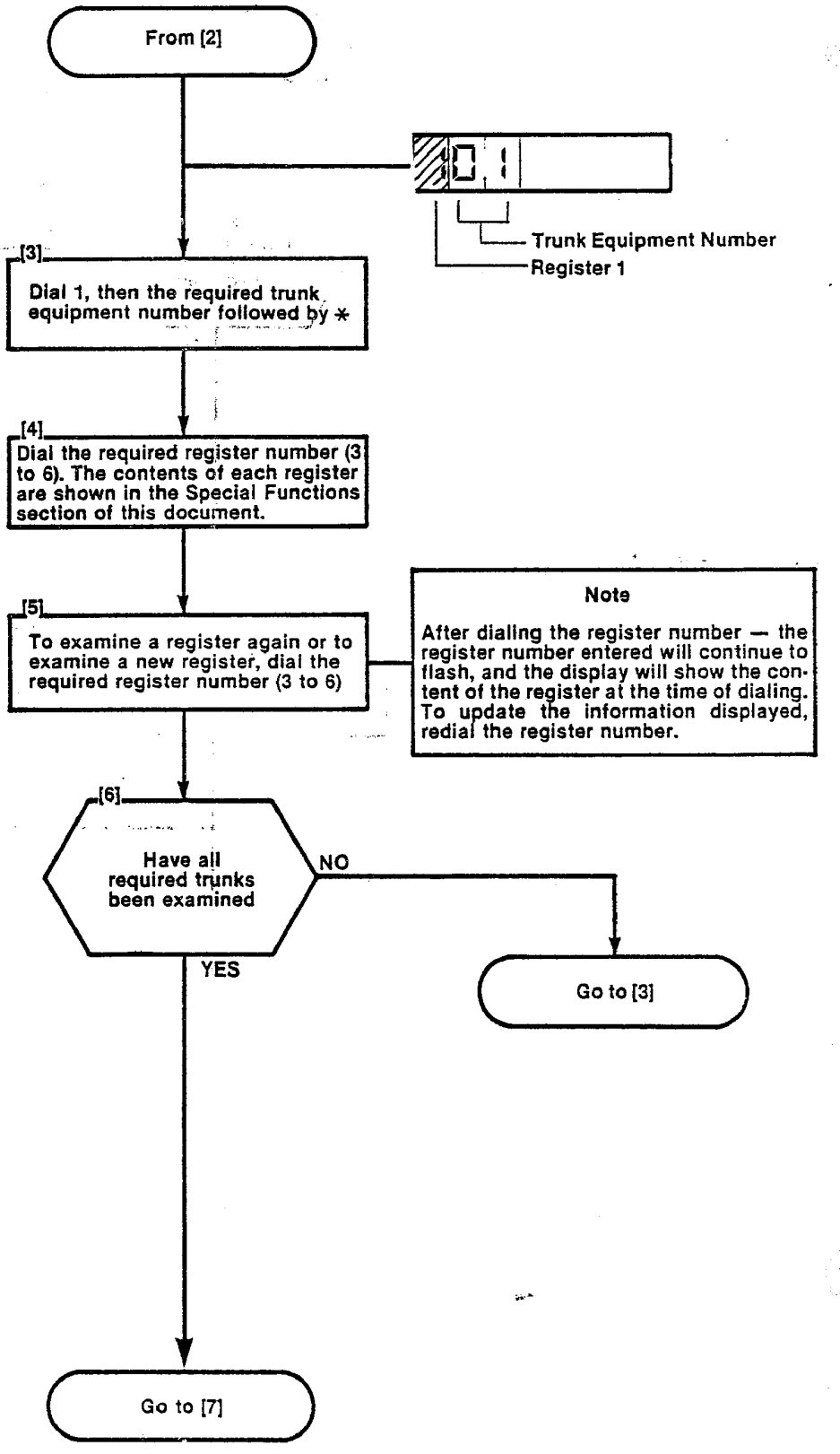

SPECIAL FUNCTION ACCESS PROCEDURE
MAP350-001
Issue 1, April 80
Sheet 3 of 6

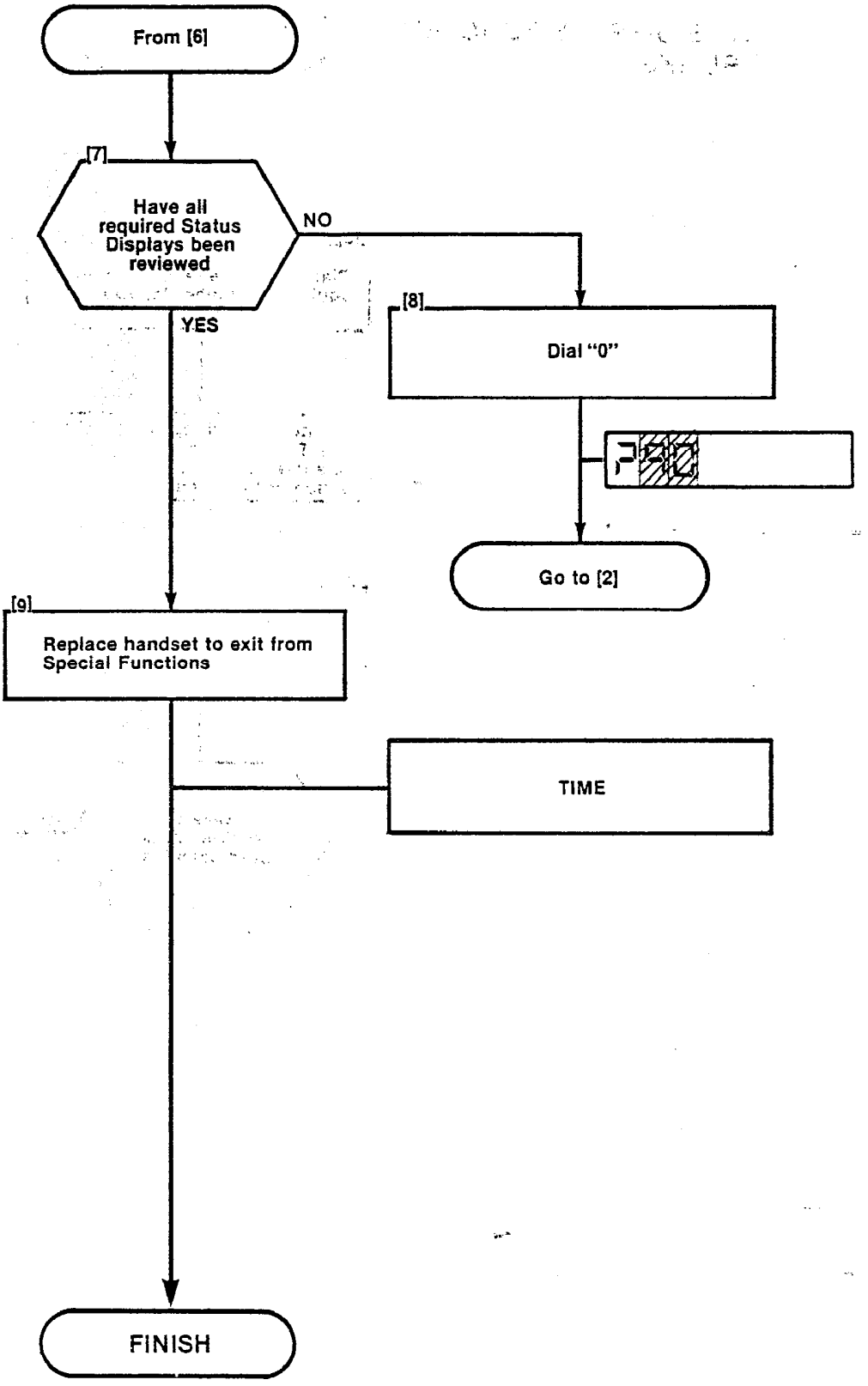

SPECIAL FUNCTION ACCESS PROCEDURE
MAP350-001
Issue 1, April 80
Sheet 4 of 6

STATUS DISPLAY FUNCTION — EXTENSIONS

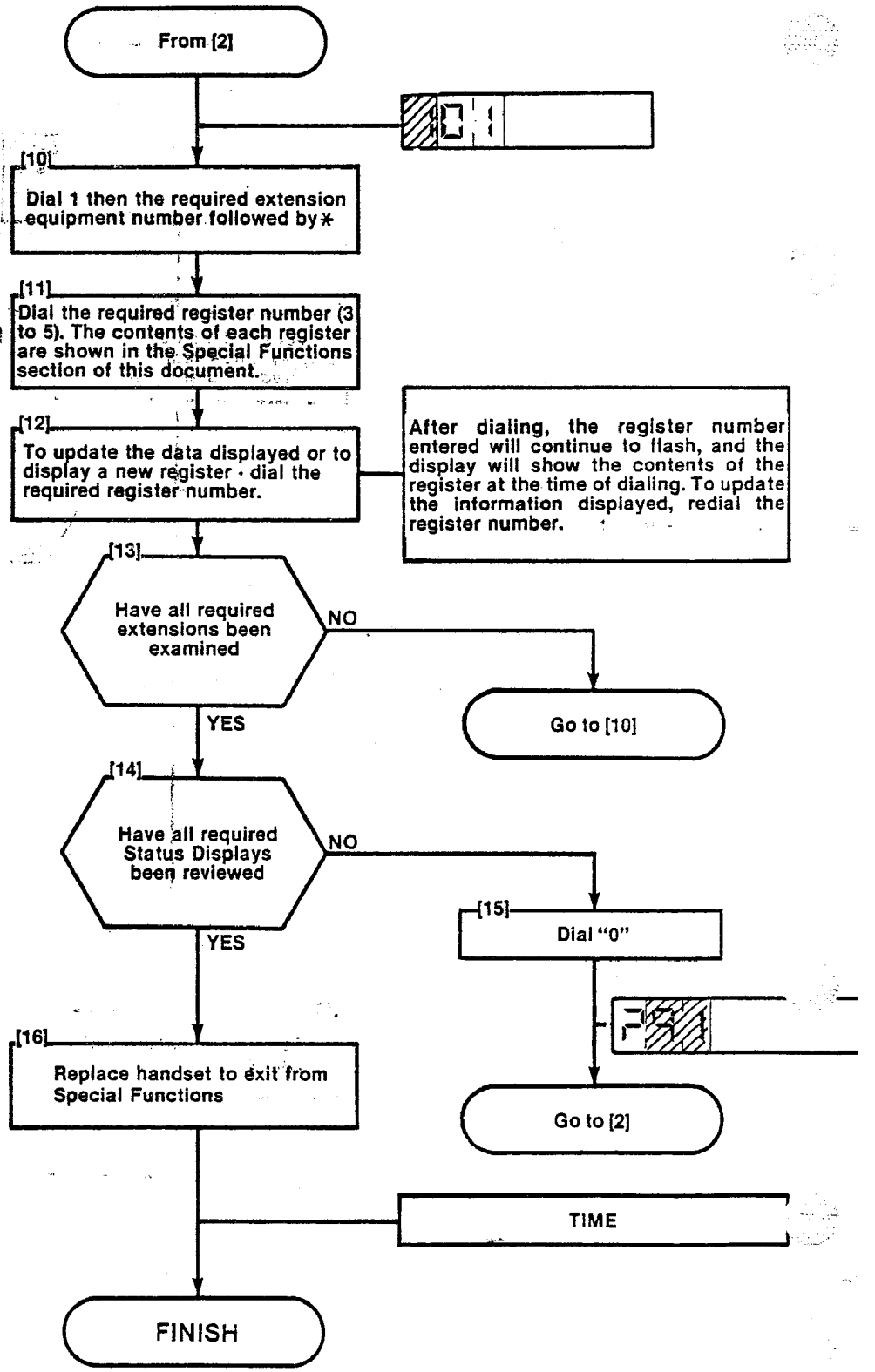

STATUS DISPLAY FUNCTION SYSTEM

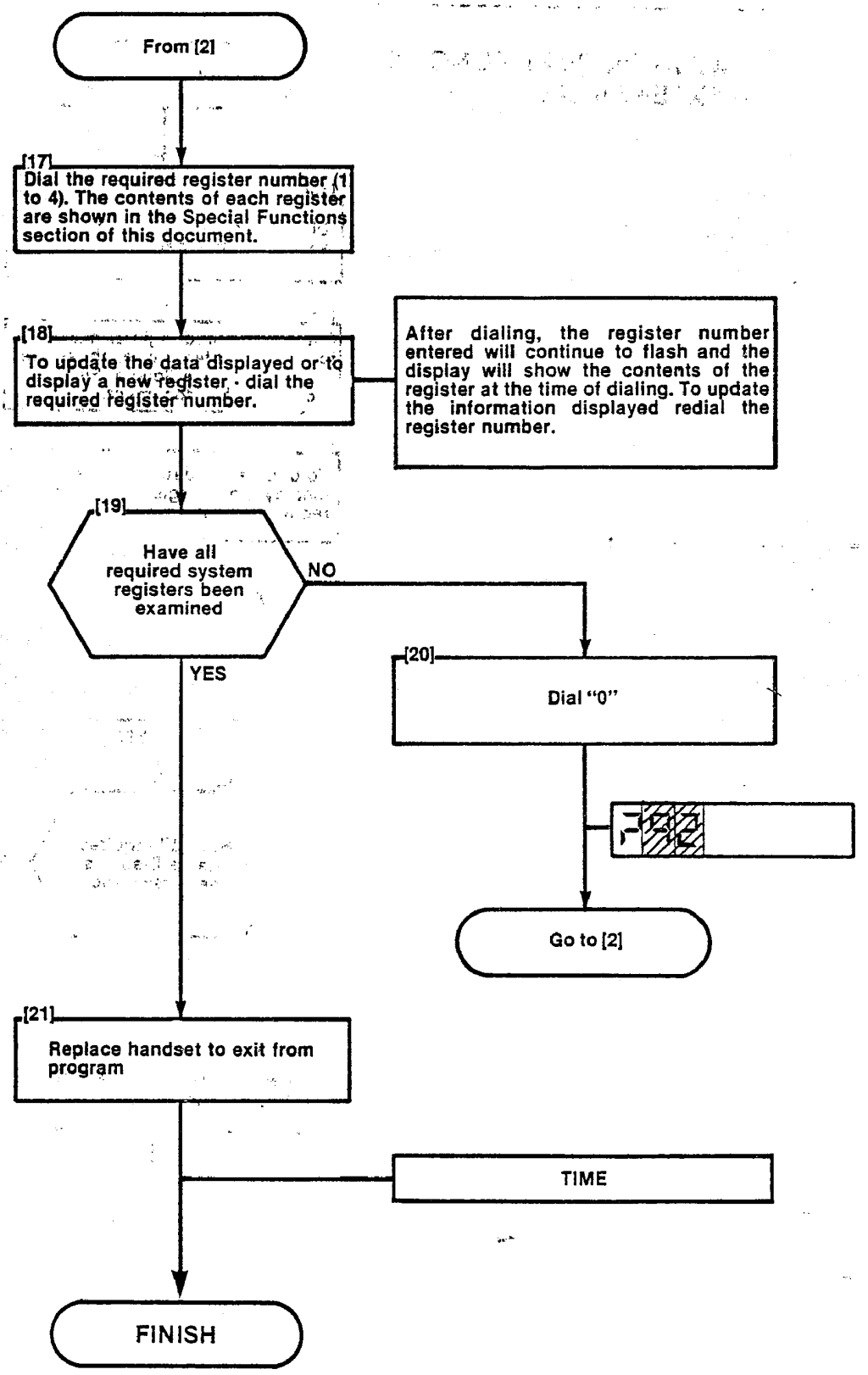

SPECIAL FUNCTION ACCESS PROCEDURE
MAP350-001
Issue 1, April 80
Sheet 6 of 6
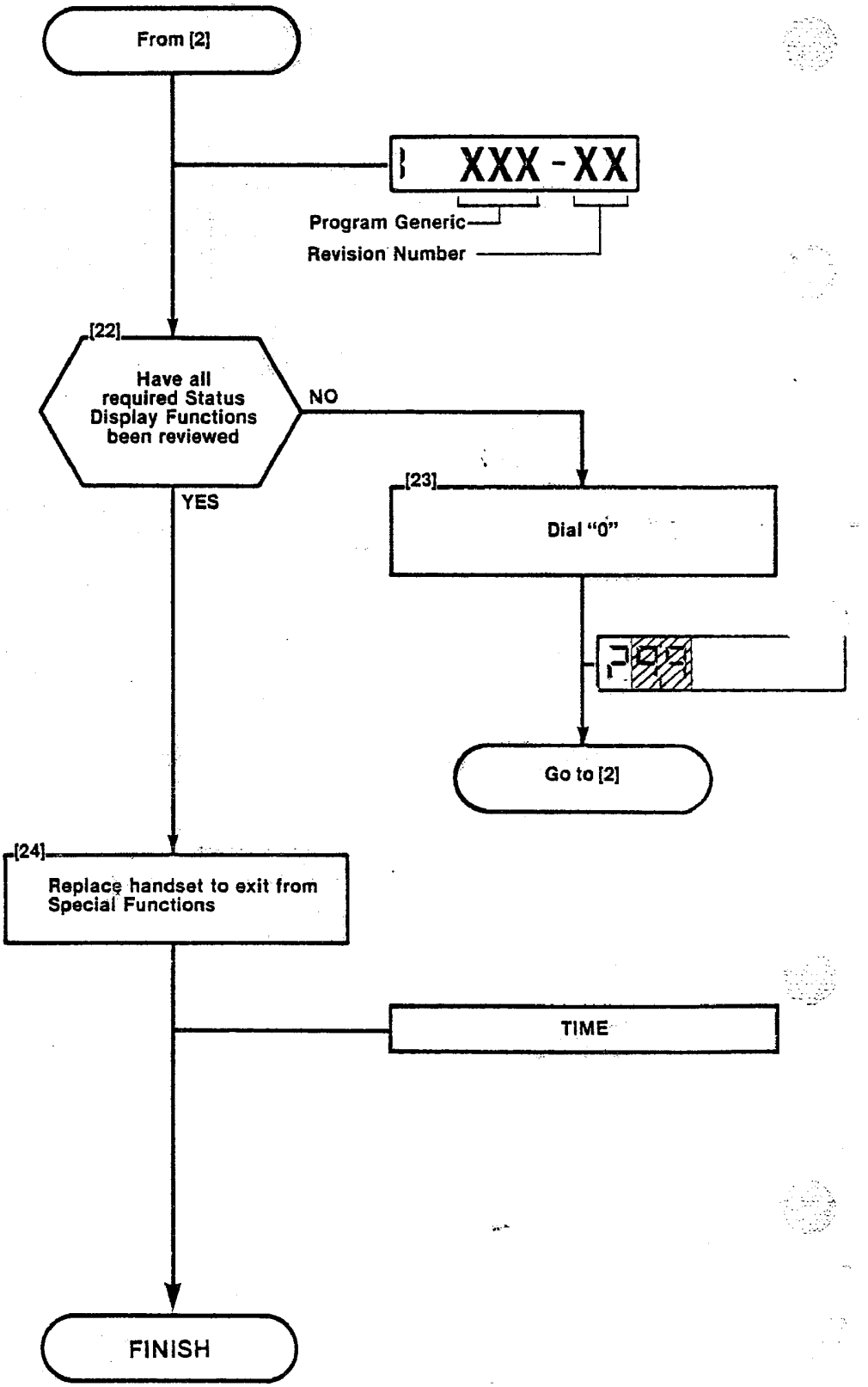
SOFTWARE IDENTITY DISPLAY