NITSUKO AMERICA
TELECOM DIVISION

NVM-202

Voice Mail with Automated Attendant

Release Notes for Versions 2.00.01, 2.00.02, 2.02, 3.0, 4.0

P/N 17570UPG08
Issue 1-0, October 1995
Printed in U.S.A. (183)

4 FOREST PARKWAY, SHELTON, CONNECTICUT 06484

TEL: 203-926-5400 FAX: 203-929-0535

This manual has been developed by Nitsuko America. It is intended for the use of its customers and service personnel, and should be read in its entirety before attempting to install or program the system. Any comments or suggestions for improving this manual would be appreciated. Forward your remarks to:

Nitsuko America, Telecom Division
4 Forest Parkway
Shelton, CT 06484

Attention: Manager, Technical Publications

Nothing contained in this manual shall be deemed to be, and this manual does not constitute, a warranty of, or representation with respect to, any of the equipment covered. This manual is subject to change without notice and Nitsuko America has no obligation to provide any updates or corrections to this manual. Further, Nitsuko America also reserves the right, without prior notice, to make changes in equipment design or components as it deems appropriate. No representation is made that this manual is complete or accurate in all respects and Nitsuko America shall not be liable for any errors or omissions. In no event shall Nitsuko America be liable for any incidental or consequential damages in connection with the use of this manual. This document contains proprietary information that is protected by copyright. All rights are reserved. No part of this document may be photocopied or reproduced without prior written consent of Nitsuko America.

©1995 by Nitsuko America. All Rights Reserved.
Printed in U.S.A.

Table of Contents

About This Supplement v

Additional Release Note For Versions 2.00.01 and Above 1

New Feature

Replacement Port Card 5

Release Notes For Versions 2.00.02 and 2.02 7

New and Changed Features

All features apply to Release 2.02. All features except the ones with a dagger apply to 2.00.02.

Hardware Changes 11
- Modified Cabinet (17570D Only) 11
- New Cabinet and Optional 4th Port (17570E Only) ‡ 11
- Larger Hard Drive 11
- Internal Modem 11
- Screen Saver 12

Bilingual Voice Prompts: An Overview 12
Answering FAX Calls 13
On the MAIN Menu 13
Installation Options 13
- Installation and Programming Notes for the Alliance Systems 13
- Default Bilingual Mode 14
- Number of Extensions and Trunks‡ 14

In System Options 14
- Transfer string‡ 14
- Play Ext. Number For Dir. Dialing‡ 14
- Hang up timer 14
- Default bilingual mode 15
- Meet-me page hold timer (For Alliance Systems Only) 15
- Call pickup string 16
- Fax detect dial string (For ONYX Only) 16

In Port Options 17
- About Enhanced Message Notification Callouts 17
- Allow Msg Notification Callouts‡ 17
- Allow Lamp Callouts‡ 17

In Mailbox Options 17
- About Help 17
- Name 17
- Transfer-only Mailbox 17
- Msg listen mode 18
- Alternate Next CRMB dial option 18
- Bilingual mode 18
- Time limit for dialing commands 18
- Use Remote Logon as Direct Logon 19
- Play Default Messages‡ 19
- Distribution Mailbox 19
- Modem Mailbox 20

Release Notes For Versions 2.00.02 and 2.02 (cont'd)

FAX Mailbox (FAX-On-Demand)‡ 24
Key Actions in Dial Action Table 25
Selecting a Language for Voice Prompts 25
Logging on to a Mailbox 25
Transferring to Non-Extensions 25
Recording a Message for a Distribution List 25
In Maintenance 25
Archive Database 26
De-Archive Database 26
Establish link with Comm Port 1 26
Set Up Serial Communications Ports 26
In Diagnostics
History Trace File Viewer‡ 26
User Features 27
Message Notification 27
Call Announcing 27
Sending Messages Using Mailbox Names 27
Changing the Listening Mode 28
Sending a Message to a Distribution List 28
On the Database Management Menu 28
On the System Administrator Menu 29
Recording Bilingual Voice Prompts 29
Miscellaneous 30
Hangup 30
Analyzed Pause 30
Voice Prompts 31

Figure 1: New NVM-202 Cabinet 11
Figure 2: Making Modem Connections on the 17570D Cabinet 21
Figure 3: Making Modem Connections on the 17570E Cabinet 21

Release Notes For Version 3.0 91

Part 1: New and Changed Features

Voice Mail Networking 95
Caller ID 95
Full Screen Editor 95
Installation Options 95
Number of Extensions and Trunks 95
Install Menu 95
System Options 96
Message backup/go-ahead time 96
Immediate Self Test of Ports (s) 96
Port Self Test timer 96
Lamp On string 96
Lamp Off string 97
Port Options 98
Self Test 98
Clear port's failure 98

Release Notes For Version 3.0 (cont'd)

Mailbox Options (cont'd)
Alternate Next CRMB dial option 98
Auto Forwarding 100
Notification Options 100
Digital pager callback number 100
Key Actions in Dial Action Table 100
Logging on to a Mailbox 100
Record a Message (With/Without a Greeting) 100
User Features 101
Enhanced Reply, Record and Send, and Message Forwarding Features 101
Auto Time-Stamp 101
Auto Help 101
Auto Forward 101
Multiple Mailbox Greetings 102
Recording Options for Automated Attendant Callers 102
Voice Prompts 103

Part 2: More About Using Full Screen Editor

Introduction 107
About Part 2 107
Getting the Main Menu for the Full Screen Editor 107
Getting Help 108
Using a Menu 109
Using the System Password 109
Moving Around the Screens and Database Options 109
The NVM-202 Menu Tree for the Full Screen Editor 112
Using the Exit Command on the Main Menu 113
Shutting Down NVM-202 113
Switching Between the Full Screen Editor and Line Editor 113
Exiting NVM-202 113
Installing NVM-202 113
Selecting Mailbox Options, Port Options, Answering Schedule Tables, and Dial Action Tables 114
More About Mailbox Options 115
Using Distribution Lists 117
Using Reports 118

Release Notes For Version 4.0 119

New and Changed Features

Pre-Installed Voice Prompts in English, French, Spanish 123
Expanded Install Menu 125
Changed COM1 Baud Rate 125
Modified Start Up Mode 125
Voice Prompts 125

About This Supplement

This supplement describes the new and enhanced features in the following NVM-2000 Software Releases:

- Release 2.00.02
- Release 2.02
- Release 3.0
- Release 4.0

This supplement also contains one additional note that applies to Releases 2.00.01 and above.

NITSUKO AMERICA
TELECOM DIVISION

NVM-202
Voice Mail
with Automated Attendant

Additional Release Note for Version 2.00.01

Table of Contents

Replacement Port Card..... 5

Replacement Port Card

The half-size port card (P/N 17574) can replace a full-size port card in the following NVM-202 cabinets:

- 17570D cabinets with Software Version 2.00.01 and 2.00.02
- 17570E and 17570G cabinets with Software Version 3.0 and above

Simply remove the screws on the back of the cabinet that secure the cover, remove the cover, remove the port card, then replace it with the 17574. No special strapping is required.

NITSUKO AMERICA
TELECOM DIVISION

NVM-202
Voice Mail
with Automated Attendant

Release Notes for Version 2.00.02 (17570D)
Release Notes for Version 2.02 (17570E & E/F)

All features apply to Release 2.02. All features except the ones with a dagger apply to 2.00.02.

New and Changed Features

Hardware Changes 11
- Modified Cabinet (17570D Only) 11
- New Cabinet and Optional 4th Port (17570E Only) ‡ 11
- Larger Hard Drive 11
- Internal Modem 11
- Screen Saver 12

Bilingual Voice Prompts: An Overview 12
Answering FAX Calls 13
On the MAIN Menu 13
Installation Options 13
- Installation and Programming Notes for the Alliance Systems 13
- Default Bilingual Mode 14
- Number of Extensions and Trunks‡ 14

In System Options 14
- Transfer string‡ 14
- Play Ext. Number For Dir. Dialing‡ 14
- Hang up timer 14
- Default bilingual mode 15
- Meet-me page hold timer (For Alliance Systems Only) 15
- Call pickup string 16
- Fax detect dial string (For ONYX Only) 16

In Port Options 17
- About Enhanced Message Notification Callouts 17
- Allow Msg Notification Callouts‡ 17
- Allow Lamp Callouts‡ 17

In Mailbox Options 17
- About Help 17
- Name 17
- Transfer-only Mailbox 17
- Msg listen mode 18
- Alternate Next CRMB dial option 18
- Bilingual mode 18
- Time limit for dialing commands 18
- Use Remote Logon as Direct Logon 19
- Play Default Messages‡ 19
- Distribution Mailbox 19
- Modem Mailbox 20
- FAX Mailbox (FAX-On-Demand)‡ 24

Key Actions in Dial Action Table 25
- Selecting a Language for Voice Prompts 25
- Logging on to a Mailbox 25
- Transferring to Non-Extensions 25
- Recording a Message for a Distribution List 25

In Maintenance 25
- Archive Database 26
- De-Archive Database 26
- Establish link with Comm Port 1 26
- Set Up Serial Communications Ports 26

In Diagnostics
History Trace File Viewer‡ 26
User Features 27
Message Notification 27
Call Announcing 27
Sending Messages Using Mailbox Names 27
Changing the Listening Mode 28
Sending a Message to a Distribution List 28
On the Database Management Menu 28
On the System Administrator Menu 29
Recording Bilingual Voice Prompts 29
Miscellaneous 30
Hangup 30
Analyzed Pause 30
Voice Prompts 31

Figure 1: New NVM-202 Cabinet 11
Figure 2: Making Modem Connections on the 17570D Cabinet 21
Figure 3: Making Modem Connections on the 17570E Cabinet 21

Hardware Changes

➤ Modified Cabinet (For 17570D Only)

The NVM-202 cabinet for Release 2.02 software is a little different than the cabinet shown in the NVM-202 Installation and Programming Guides. The ON/OFF and Reset buttons have been repositioned. The ON/OFF button is the rightmost button on the front of the cabinet and the Reset button is the middle button.

➤ New Cabinet and Optional 4th Port (For 17570E Only)

The new NVM-202 cabinet is shown below. It comes with 3 ports and requires a VGA monitor. A fourth port is available if you connect a MemoPlug to the printer port. You must also enable the port in system programming (*Customize Database* Menu, *Port Options*).

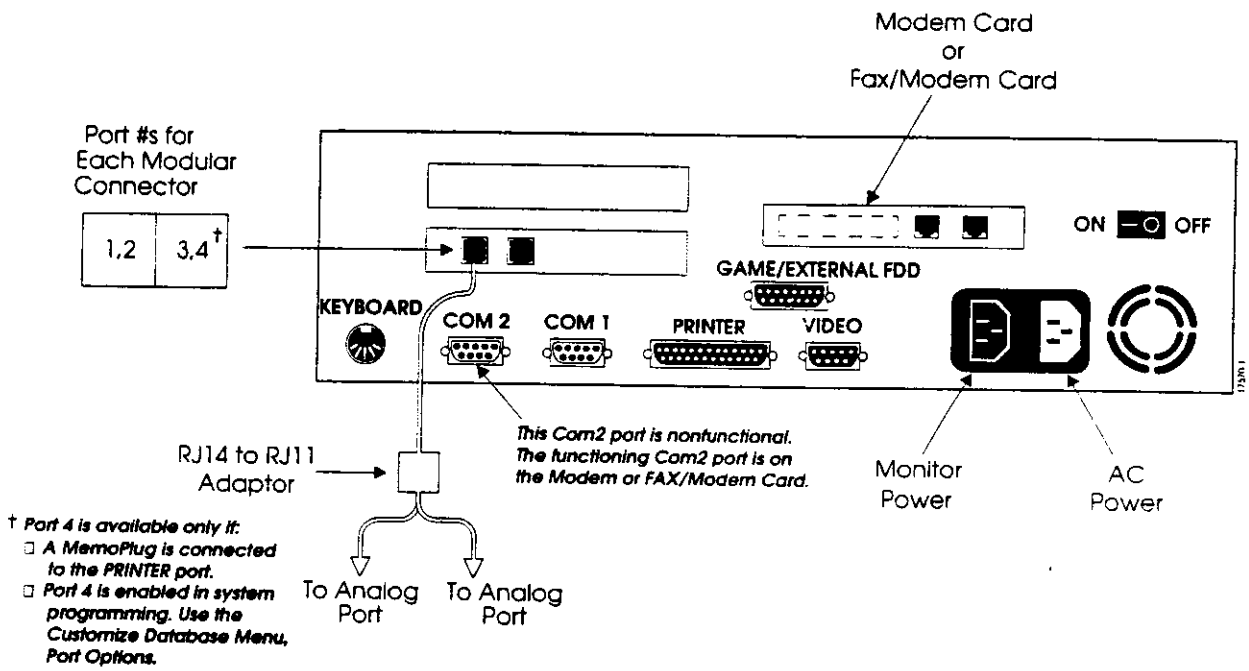

FIGURE 1: New NVM-202 Cabinet

Note: The Line cords from the adaptor are labeled L1 and L2. L1 connects to the lower-numbered port in the connector. If desired, you can use an RJ14 jack instead of the adaptor. In this case, the RD/GR pair connects to the lower-numbered port, the BK/YL pair to the other port.

➤ Larger Hard Drive

For 17570D, the hard drive now provides 6 hours of storage time.
For 17570E, the hard drive now provides 12 hours of storage time.

➤ Internal Modem

The NVM-202 cabinet will now come with a pre-installed Modem Card. You access the internal modem (on the card) through the Automated Attendant (see page 20).

Hardware Changes (cont'd)

➤ Screen Saver

The NVM-202 cabinet will now come with a pre-installed Modem Card. You access the internal modem (on the card) through the Automated Attendant (see page 20).

Bilingual Voice Prompts: An Overview

NVM-202 can now accommodate voice prompts in two languages. NVM-202 comes with at least one language installed and can come with two languages; it depends on which languages are required (see your Account Representative). The System Administrator can:

- Use the *System Prompt Customization* feature to record the voice prompts in any two languages. Or, if the default (factory-installed) language meets one of the language requirements, the System Administrator can record voice prompts in the second language only (see also *In System Administrator Menu [Recording Bilingual Prompts]* on page 29.
- Use the INSTALL SYSTEM Menu to assign a *Default Bilingual Mode* during NVM-202 installation (see also page 14). This *Default Bilingual Mode* gets assigned to:
  - The System Option, *Default bilingual mode* (see the next bullet)
  - The Mailbox Option, *Bilingual mode* (see 3rd & 4th bullets)
- Select the default system language (see also *In System Options [Default bilingual mode]* on page 15). This language gets assigned to all the voice prompts that play to the following types of callers: (1) An Automated Attendant caller on any port (2) People who call NVM-202 by dialing the master extension number from an extension, and (3) Callers who are sent to NVM-202 by the phone system (i.e, recalls). A few of these voice prompts are as follows: ***Please hold a moment.*** and, ***Extension XXX is busy. To leave a message press 1. For other options press 2.***, and. ***Goodbye***, etc. NVM-2002 plays this language unless the caller's trunk has been assigned the other language (see next bullet).
- Select the language for a trunk (see also *In Mailbox Options [Bilingual mode]* on page 18). NVM-202 uses this language for all voice prompts that play on the trunk. A few of these voice prompts are as follows: ***Please hold a moment.***, and ***Extension XXX is busy. To leave a message press 1. For other options press 2.***, and ***Goodbye***, etc. This setting overrides the default system language (above).
- Assign a language to any Subscriber, Guest, or Message Center Mailbox (see also *In Mailbox Options [Bilingual mode]* on page 18). People will hear this language when they call (log on to) these mailboxes (regardless of what language they heard prior to logging on).
- Set up a Call Routing Mailbox that lets an Automated Attendant caller press a key to select voice prompts in the other language (see also *Dial Action Table* on page 25. The language assigned to the key gets assigned to all the system voice prompts that the caller hears until the caller hangs up. If, however, pressing the key logs the caller onto a Subscriber, Guest, or Message Center Mailbox, the caller will hear the language programmed for that mailbox (see above).

Answering FAX Calls

This feature lets the NVM-202 Automated Attendant handle an incoming FAX transmission. For example, suppose someone calls your company's Automated Attendant number, waits for an answer, then presses the START key on their FAX machine. Upon detecting the FAX carrier tone, NVM-202 can transfer the call to your company's FAX machine so that the FAX transmission can come through.

NVM-202 will transfer the call to the FAX machine only if:

- The caller is calling from a FAX machine that sends a CNG tone (1100 Hz, with an on/off time of 0.5/3 sec).
- The FAX machine is connected to an extension in the phone system.
- The System Option, *FAX detect dial string*, contains the extension number of the FAX machine (see also page 16).
- A Call Routing Mailbox answered the call (for details, see *How the Automated Attendant Answers Calls* in Chapter 4 of the Installation and Programming Guide).
- The *Time limit for dialing commands* for the Call Routing Mailbox is at least 30 seconds (see *In Mailbox Options* on page 18).

Note: This feature does not apply to the Alliance phone systems.

On the MAIN Menu

There is one new item on the MAIN Menu:

- **SD - Shut Down Voice Mail System**
  You must shut down NVM-202 before you reset NVM-202 or before you turn off NVM-202 power. If you do not, the NVM-202 database may get corrupted.

Installation Options ➤ Installation and Programming Notes for the Alliance Systems

NVM-202 is now compatible with the Alliance-S, Alliance-M/L. Make note of the following:

- Program the Alliance for Voice Mail (see the Alliance Manuals)
- Set the System Option, *Meet-me-Page hold timer* (see page 15).
- Default values for the following System Options are as follows:
  - *Hold retrieval string* = FP*7, *Flash timer* = .5 sec
  - *Wait for first/subsequent protocol digit* = 3 sec/3sec
  - *Wait after last protocol digit* = 1 sec
- Default *Park/Paging string* for Subscriber Mbxes = FW/77MM
- The following options do not apply to the Alliance:
  - *Ringdown string* (in System Options)
  - *Status Monitor* (in Port Options)
  - *ACD Mailbox* (in Mailbox Options)
- The Alliance does not use ASIs.
  - To use NVM-202 port 1 in the 17570D cabinet, connect a modular cord from port 1 to an analog station port in the Alliance. To use NVM-202 ports 2 and 3, connect a modular cord from the port connector to an RJ14 jack. Then connect the RD/GR pair to one analog station and the BK/YL pair to another.
    To connect the Alliance to the 17570E cabinet, see Figure 1.
    To make the connections to the modem, see Figures 2 & 3.

Installation Options (cont'd)

➤ Default Bilingual Mode

When you install NVM-202 for a phone system, the screen now asks you to select a *Default Bilingual Mode*. The language you select for the *Default Bilingual Mode* gets assigned to:

- The System Option, *Default bilingual mode* (see *In System Options*) in these Release Notes.
- The Mailbox Option, *Bilingual mode* (see *In Mailbox Options* in these Release Notes).

To toggle between language 1 and language 2, press L.

➤ Number of Extensions and Trunks (For 2.02 Only)

The installation procedure now lets you enter the number of extensions and trunks in the phone system. NVM-202 will create an equal number of Subscriber and Trunk Mailboxes, respectively.

In System Options

➤ Transfer string (For 2.02 Only)

This is the string that NVM-202 must dial to initiate a transfer to an extension. After dialing this string, NVM-202 dials the extension number.

The default string will work for all phone systems and does not need to be changed. If, however, you do a software update and the Automated Attendant is not transferring calls correctly, enter FP for the string.

DEFAULT: FP
ENTRIES: N - None
Up to 20 digits including the codes below. Use the string your phone system uses to take a call off of Hold.
F - Flash
W - Wait for dial tone
S - Wait for any type of sound
P - Pause (NVM-202 pauses 2 sec, dial next digit)
M - Monitored pause (NVM-202 pauses 2 sec, dials next digit only if no busy/reorder tone. Otherwise, NVM-202 terminates the call.)
A - Analyzed pause (NVM-202 pauses 4 sec, dials next digit only if no busy/reorder tone. If busy/reorder tone, NVM-202 terminates call.)

➤ Play Ext. Number For Dir. Dialing (For 2.02 Only)

This option determines which voice prompts play after an Auto Attendant caller name-dials an extension through a Call Routing or Directory Dialing Mailbox. If this option is enabled, NVM-202 will play the extension number after the extension user's name.

DEFAULT: N
ENTRIES: Y - Yes
N - No

➤ Hang up timer

The Hang up timer is the amount of time NVM-202 must stay on hook in order for the phone system to recognize the time interval as a "Hang up" instead of a Flash. It is recommended that you enter a value equal to three times the Flash value.

DEFAULT: 150
ENTRIES: 1-999 (1 = 10ms)

System Options (cont'd)

➤ Default bilingual mode

This is the language (Language 1 or Language 2) that NVM-202 uses for the voice prompts that play to the following types of callers: (1) An Automated Attendant caller on any port (2) People who call NVM-202 by dialing the master extension number from an extension, and (3) Callers who are sent to NVM-202 by the phone system (i.e, recalls). A few of these voice prompts are as follows: ***Please hold a moment.*** and, ***Extension XXX is busy. To leave a message press 1. For other options press 2.*** and, ***Goodbye***, etc.

In a single-language system, Language 1 and Language 2 are identical. In a two-language system, Language 1 is the language that appears first on the list below and Language 2 is the language that appears second:
English
Spanish
French
Italian
German
Russian
Portuguese
Greek
Polish
Norwegian
Swedish
Belgian
Dutch
Swiss
Japanese
Chinese
Thai
Korean
Arabic

Callers will hear the language selected for the *Default bilingual mode* unless they:

- Are using a trunk that has been assigned the other language (see also *In Mailbox Options [Bilingual mode]* on page 18).
- Press a dialpad key that has been programmed to play the voice prompts in the other language (see also *Dial Action Table* on page 25.
- Log on to a Subscriber, Guest, or Message Center Mailbox that has been programmed for the other language (see also *In Mailbox Options [Bilingual mode]* on page 18).

See also *Bilingual Voice Prompts: An Overview* on page 12.

DEFAULT: Language 1
ENTRIES: L - toggle between languages

➤ Meet-me page hold timer (For Alliance Phone Systems Only)

This is the amount of time a person has to pick up a call that has been parked by the NVM-202 (see Subscriber Mailboxes [*Park/Paging string*] in Chapter 6 of the Installation and Programming Guide).

DEFAULT: 120 sec
ENTRIES: 1-240 sec

System Options (cont'd)

➤ Call pickup string

The Call Pickup string is used for:

- An Automated Attendant caller who tries to access the internal modem while being on a non-modem port
- An Automated Attendant caller who tries to access the FAX-On-Demand feature while being on a non-FAX port (this applies to Release 2.02 only)

This string transfers the caller from a non-modem port to a modem port or non-FAX port to a FAX port so that the caller can use the internal modem or FAX-On-Demand feature, respectively.

The entry you make for this string is based on the Call Pickup code in the phone system. If, for example, the Call Pickup code is 7, enter W7 for the Call pickup string.

DEFAULT: ONYX: W *
Alliance: None

ENTRIES: N - None
Or, up to 20 digits including:
F - Flash (To set the duration of the Flash, use System Options. See also *System Options* in Chapter 5 in the Installation and Programming Guide for details.)
W - Wait for dial tone
S - Wait for any type of sound
P - Pause (NVM-202 pauses 2 sec, dials next digit)
M - Monitored pause (NVM-202 pauses 2 sec, dials next digit only if no busy/reorder tone. If busy/reorder tone, NVM-202 terminates the call.)
A - Analyzed pause (NVM-202 pauses 4 sec, dials next digit only if no busy/reorder tone. If busy/reorder tone, NVM-202 terminates the call.)

➤ FAX detect dial string (For ONYX Only)

This is the string that NVM-202 automatically dials when the Automated Attendant answers an outside call and hears FAX carrier tone. You typically enter the extension number for the FAX machine. For more information, see *Answering FAX Calls* on page 13.

Note: NVM-202 flashes the line before dialing the *FAX detect dial string*. Therefore, there is no need to enter a Flash in the dial string.

DEFAULT: None

ENTRIES: N - None
Or, up to 20 digits including:
F - Flash (To set the duration of the Flash, use System Options. See also *System Options* in Chapter 5 in the Installation and Programming Guide for more details.)
W - Wait for dial tone
S - Wait for any type of sound
P - Pause (NVM-202 pauses 2 sec, dials next digit)
M - Monitored pause (NVM-202 pauses 2 sec, dials next digit only if no busy/reorder tone. If busy/reorder tone, NVM-202 terminates the call.)
A - Analyzed pause (NVM-202 pauses 4 sec, dials next digit only if no busy/reorder tone. If busy/reorder tone, NVM-202 terminates the call.)

In Port Options

➤ About Enhanced Message Notification Callouts

NVM-202 can now send out more than one Message Notification call at a time (as long as Message Notification callouts are allowed for more than one port). For example, suppose Message Notification callouts are allowed for ports 1 and 2. This lets NVM-202 simultaneously send two different notification calls: One callout for Mailbox A on port 1 and another callout for Mailbox B on port 2.

➤ Allow Msg Notification callouts (For 2.02 Only)

This option allows Msg Notification calls through the port.

DEFAULT: Yes for all ports
ENTRIES: Y - Yes
N - No

➤ Allow Lamp callouts (For 2.02 Only)

This option allows the port to be used for updating (turning on/off) the Msg Waiting Lamps at the extensions.

DEFAULT: Y, but only for the highest number installed port. For example, if 2 ports are installed, *Lamp callouts* will be allowed for port 2.
ENTRIES: Y - Yes
N - No

In Mailbox Options

➤ About Help

At the CUSTOMIZE prompt, you can now request a mailbox help screen that lists, at the bottom, only the options available to a particular type of mailbox. For example: To get a help screen on Subscriber Mailboxes, you type the following at the CUSTOMIZE prompt: H MO S. The code (s) you enter after MO are simply the codes you enter to assign a type to a mailbox (e.g., enter MC for Message Center.)

➤ Name

A mailbox's name can now be entered when recording and sending a message to that mailbox. This way, the person recording the message does not have to remember mailbox numbers to receive the message (see also page 27).

➤ Transfer-only Mailbox

This option applies to Subscriber, Guest, and Message Center Mailboxes. It lets an Automated Attendant caller **only** transfer to a Subscriber, Guest, or Message Center extension. This means that the caller cannot leave a message in the extension's mailbox (if the transfer is incomplete) nor use other Automated Attendant features (e.g., Call Queuing, Park/Page, Call Waiting, Quick Message). If the transfer is incomplete, NVM-202 lets the caller know the extension status (e.g., ***Extension ____is busy***) and automatically returns the caller to the Welcome Message for the Call Routing or Directory Dialing Mailbox that transferred the call. The *Transfer-only Mailbox* option is commonly used for Hunt Group extension numbers, extensions with FAX machines, or single line extensions that should not have receive messages through the Automated Attendant. Make sure you enter the desired extension number in the mailbox's Extension field.

DEFAULT: No
ENTRIES: Y - Yes
N - No

In Mailbox Options (cont'd)

➤ Msg listen mode

This option applies to Subscriber, Guest, and Message Center Mailboxes. It selects the type of messages that will play when a person presses L to listen to their messages. The listen modes are as follows:

- **New Messages**
  These are messages that have not been listened to.
- **Saved Messages**
  These are messages that have been saved in a previous session.
- **Held Messages**
  These are messages that have been partially listened to (and not saved) in a previous session.
- **All Messages**
  These are the new, saved, and held messages.

The user can override this listen mode on a per call basis (see *Changing the Listen Mode* on page 28 of this supplement).

DEFAULT: A
ENTRIES: N - New A - All
S - Saved H - Held

➤ Alternate Next CRMB dial option

This option applies to Subscriber and Message Center Mailboxes that have a Next Call Routing Mailbox. When enabled, this option lets a caller use Keys 0-9 (not just Key 0) during or after the greeting plays in the Subscriber or Message Center Mailbox. This lets a caller dial another extension, for example, after leaving a message in a Subscriber or Message Center Mailbox.

DEFAULT: No
ENTRIES: Y - Yes
N - No

➤ Bilingual mode

Bilingual mode applies to Subscriber, Message Center, and Guest Mailboxes. *Bilingual mode* is the language that NVM-202 uses for all the voice prompts that play after a person calls (logs on to) one of these mailboxes (e.g., ***You have 3 messages.***)

See also *Bilingual Voice Prompts: An Overview* on page 12.

DEFAULT: Language 1
ENTRIES: L - Toggle language

➤ Time limit for dialing commands

This option has been added to Call Routing and Directory Dialing Mailboxes. This time limit is the amount of time a caller has to respond to the prompts that play in those mailboxes. If the caller does not dial a code within this time limit, NVM-202 replays the prompt. This time limit overrides the *Time limit for dialing commands* in System Options.

DEFAULT: 5 seconds
ENTRIES: 1-99 seconds

In Mailbox Options (cont'd)

➤ Use Remote Logon as Direct logon

This option applies to Subscriber, Message Center, and Guest Mailboxes. It lets a person dial an NVM-202 extension number from a Subscriber, Guest, or Message Center extension to log on to the mailbox assigned to that extension. This way, the person does not have to dial the mailbox number to log on. For instructions on calling (logging on to) a mailbox, see the User's Guide.

DEFAULT: No
ENTRIES: Y - Yes
N - No

➤ Play Default Messages (For 2.02 Only)

This option applies to Call Routing Mailboxes. It determines whether NVM-202 plays the default Welcome Message and Instruction Menu for a new Call Routing Mailbox. The default Welcome Message is ***Thank you for calling.*** The default Instruction Menu is ***If you are calling from a touch tone phone, please dial the extension number you wish to reach or dial 0 for assistance. If you are calling from a rotary dial phone, please stay on the line for assistance.***

If the *Play Default Messages* option is enabled and you erase a customized Welcome Message and/or Instruction Menu, NVM-202 will automatically substitute the default recordings for the Call Routing Mailbox.

DEFAULT: Y
ENTRIES: Y - Yes
N -No

➤ Distribution Mailbox

Name

The name can now be used to send a message to the associated Distribution List. That is, Subscriber and Guest Mailbox users can now enter the Distribution Mailbox name when recording and sending a message to the associated Distribution List. They simply call their mailbox, press RS, then follow the voice prompts for entering a mailbox name. There are some restrictions (see *Directory List* below).

Directory List

This code determines whether a Subscriber or Guest Mailbox user can enter the Distribution Mailbox name to send a message to the assigned Distribution List. See also the *Name* field above.

DEFAULT: N
ENTRIES: 1-100 - Allow name-dialing by Subscriber/Guest Mailbox users that have a *Directory List* entry of 1-100 (respectively) or A
A - Allow name-dialing by Subscriber/Guest Mailbox users with any *Directory List* entry except N
N - Not allow name-dialing of the Distribution Mailbox

In Mailbox Options (cont'd)

➤ Modem Mailbox

This topic is divided into the following parts:

- Introduction
- Required Equipment
- Connecting the Modem Card to NVM-202 Port 1
- Customizing Modem Mailbox Options
- Providing Callers With Access to the Modem Mailbox
- Customizing the Call Pickup String
- Assigning Extension Numbers to Ports

Introduction

A Modem Mailbox lets an Automated Attendant caller access the NVM-202 internal modem, which in turn provides access to the NVM-202 programming menus. This way, you can remotely program NVM-202 without having to call into an external modem on a separate (non-Automated Attendant) line.

The internal modem is on the pre-installed Modem Card. There are three things to note about the Modem Card: (1) COM2 is on the Modem Card. Do **not** change the parameters for COM2 (using the *Serial Communications Ports* command on the Maintenance Menu). (2) The Modem Card must be connected to NVM-202 port 1. (3) The dip switches on the Modem card must not be reset.

Required Equipment

- *When the phone system is an ONYX*: A 2500 set interface (e.g., ASI) and an RJ14-to-RJ11 adaptor (e.g., Radio Shack RJ14-to-RJ11 adaptor, Catalog Number 279-401 or Suttel Part # SE-174)
  When the phone system is an Alliance: An RJ14 Jack and 2-pair station wire
- A Parallel Circuit Adaptor, two 4-wire modular line cords, a RJ14-to-RJ11 Adaptor that can plug into the Parallel Circuit Adaptor. Or, enough wiring and modular jacks to complete the necessary parallel circuit (see Figures 2 & 3)

Connecting the Modem Card to NVM-202 Port 1

1. Plug one end of a modular cord into the NVM-202 connector for Voice Mail ports 1 and 2 (see Figures 2 & 3). Plug the other end into the Parallel Circuit Adaptor.
2. Plug the appropriate RJ14-to-RJ11 Adaptor into the Parallel Circuit Adaptor.
3. Plug cord L1 (from the RJ14-to-RJ11 Adaptor in step 2) into the LINE jack on the Modem Card. Modular cord L1 connects the card to NVM-202 port 1. Do not connect L2 to anything.
4. Plug one end of the other modular line cord into the empty modular connector on the Parallel Circuit Adaptor. Connect the other end to an RJ14 adaptor or an RJ14 jack.
   - If you connect to an adaptor, simply connect L1 to one analog station and L2 to another.
   - If you connect to an RJ14 jack, connect the RD/GR pair to one analog station and the BK/YL to another.

   If you are connecting to an ONYX, L1 or the RD/GR pair must be connected to port associated with the master extension number for the UCD Hunt Group that contains the Voice Mail extensions.
5. Do not change the dip switches on the Modem Card.

In Mailbox Options (cont'd)

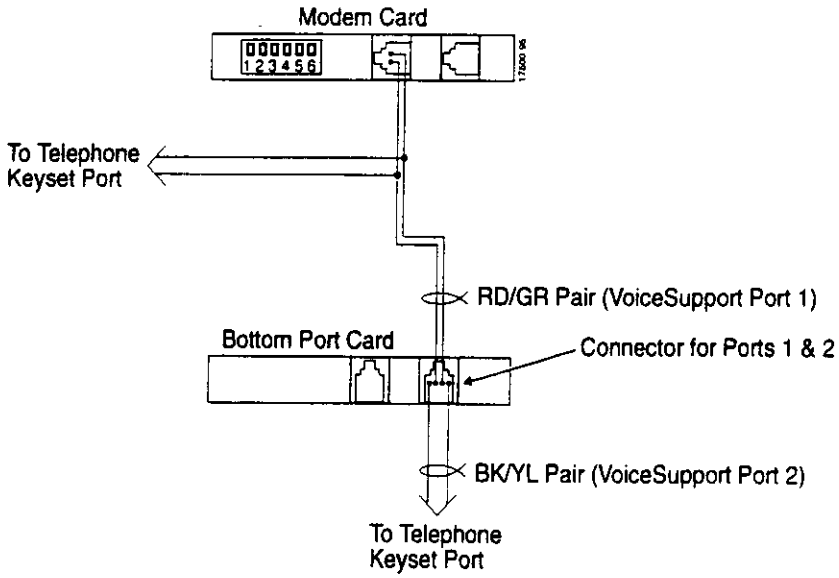

FIGURE 2: Making Modem Connections on the 17570E Cabinet

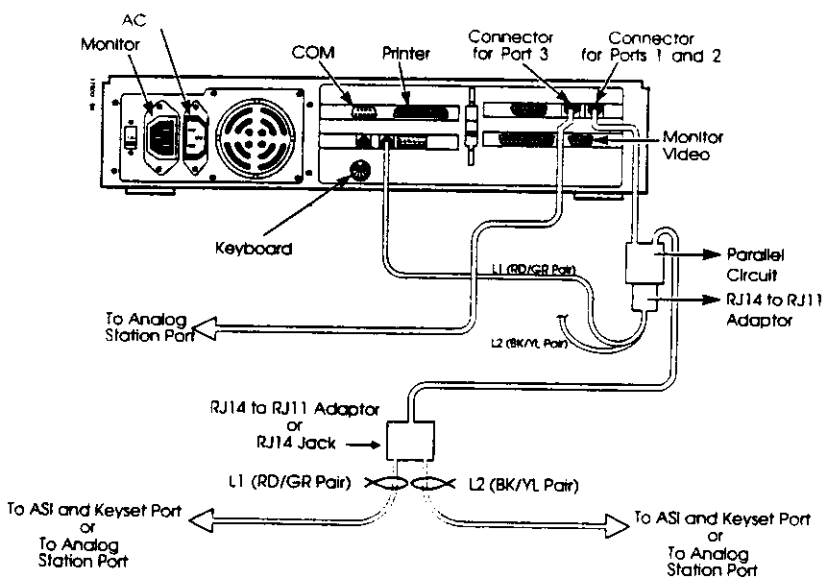

FIGURE 3: Making Modem Connections on the 17570D Cabinet

In Mailbox Options (cont'd) ➤ Modem Mailbox (cont'd)

Customizing the Modem Mailbox Options

Security Code
This is a code that the caller must dial to access the internal modem.

DEFAULT: N
ENTRIES: Up to 6 digits
N - None

Name
This option lets you assign a name to the Modem Mailbox. The name appears in system reports. The name is also used for Directory Dialing. A caller dials this name from a Directory Dialing Mailbox to reach this Modem Mailbox. For more information on Directory Dialing, see *Directory Dialing Mailboxes* in Chapter 6 of the Installation and Programming Guide.

A caller also dials this name from an Extension Name Directory to transfer to this Modem Mailbox. For more information, see *How the Automated Attendant Provides Routing Options (Route to an Extension Name Directory)* in Chapter 4 of the Installation and Programming Guide.

DEFAULT: None
ENTRIES: Up to 25 characters (numbers, letters, blanks, punctuation). The first character must not be a blank or a punctuation mark if name-dialing is allowed.
N - None

Department
This option identifies the department for the Modem Mailbox, if any.

DEFAULT: N
ENTRIES: Up to 10 characters (numbers, letters, blanks, punctuation)
N - None

Next Call Routing Mailbox
NVM-202 uses this Call Routing Mailbox to route a caller who tries to access the Modem Mailbox when port 1 is busy. NVM-202 routes the caller using the Key 0 Action of Next Call Routing Mailbox's Dial Action Table.

DEFAULT: N
ENTRIES: Any Call Routing Mailbox Number
N - None

Also make sure to:

- Use *Mailbox Options* (on the Customize Menu) to create the Call Routing Mailbox that should be used as the Next Call Routing Mailbox. Assign a Dial Action Table to the mailbox.
- Use *Dial Action Table* (on the Customize Menu) to assign an action to Key 0 for the Next Call Routing Mailbox's Dial Action Table.

In Mailbox Options (cont'd) ➤ Modem Mailbox (cont'd)

Customizing the Modem Mailbox Options (cont'd)

Tenant
This is the tenant number for the Modem Mailbox.

DEFAULT: 1
ENTRIES: 1-4

Directory List
This list code determines whether a caller can name-dial this Modem Mailbox or extension from:

- A Directory Dialing Mailbox
- A Call Routing Mailbox programmed for an Extension Name Directory (DIRF or DIRL in the Dial Action Table)

For more information on Directory Dialing Mailboxes, see Chapter 6 in the Installation and Programming Guide. For more information on an Extension Name Directory, see *How the Automated Attendant Provides Routing Options* in Chapter 4.

DEFAULT: A
ENTRIES: 1-100 - Allow caller to name-dial this Modem Mailbox only from a Directory Dialing Mailbox or Extension Name Directory with a *Directory List to use* entry of 1-100 (respectively) or "A"
A - Allow caller to name-dial this Modem Mailbox from any Directory Dialing Mailbox or Extension Name Directory that does not have a *Directory List to use* entry of N
N - Not allow caller to name-dial this Modem Mailbox

Time limit for dialing commands
This option sets the amount of time a caller has to respond to a Modem Mailbox voice prompt before NVM-202 repeats it. This option overrides the same-named time limit in System Options.

DEFAULT: 5 sec
ENTRIES: 1-99 sec

Providing Callers With Access to the Modem Mailbox

To let a caller access the Modem Mailbox, place the mailbox in:

- A Dial Action Table. This let a caller press one or more keys to access the mailbox. Or.
- An Answering Schedule Table. This gives the caller access to the mailbox as soon as NVM-202 answers their call.

For more information on Dial Action and Answering Schedule Tables, see Chapter 7 in the Installation and Programming Guide.

Customizing the Call Pickup String

The Call Pickup string is used for an Automated Attendant caller who tries to access the internal modem while being on a non-modem port (which is any port except port 1). The NVM-202 system dials this string to transfer the caller to the modem port (port 1). For details, see *System Options (Call pickup string)* on page 16 in this supplement.

In Mailbox Options (cont'd)

➤ Modem Mailbox (cont'd)

Assigning Extension Numbers to NVM-202 Ports

Make sure that each NVM-202 port has a Voice Mail extension assignment in programming. For example, if Voice Mail extension 303 is connected to NVM-202 port 2, assign 303 to port 2 using the *Port Options* command on the *Customize Database* Menu.

➤ FAX Mailbox/FAX-On-Demand (For 2.02 Only)

The FAX-On-Demand feature lets NVM-202 store documents on its hard disk and FAX them to callers. An Automated Attendant caller selects the documents by pressing keys on their touch tone phone. NVM-202 then sends the documents to the caller's FAX machine. NVM-202 can FAX documents in two different ways: By FAX Callbacks and/or FAX Same-Call Transactions. The FAX-On Demand feature also provides FAX Distribution Lists, which allows scheduled FAX calls.

About FAX "Callbacks"

NVM-202 requests the caller's FAX number, then calls the person back at that number and FAXes the document. If the callback doesn't go through, NVM-202 will retry the call. The amount of time NVM-202 waits before retrying **and** the number of retries is programmable. In addition, you can allow or prevent long distance callbacks. If you allow long distance callbacks, you can still restrict callbacks to four different areas codes. This prevents, for example, callbacks to overseas numbers.

About FAX "Same-Call" Transactions

NVM-202 can FAX the document to the caller while the caller is on line, as long as the caller is using a FAX telephone.

About the Documents

A caller can order up to 10 documents in any one session. If desired, you record an announcement that lists the documents for the callers. And, for documents with sensitive information, you can require that the caller enter a security code.

NVM-202 can store up to 100 documents, and there is no restriction on the number of pages in a document. You can load documents into the system from a floppy disk or from a hard copy.

About FAX Distribution Lists

The FAX-ON-DEMAND feature also includes FAX Distribution Lists. A FAX Distribution List lets NVM-202 FAX up to 10 different documents to 100 FAX numbers (maximum) on the date and time you select. This makes it easy, for example, to send update information on several products to each of your branch offices.

For more information on FAX-On-Demand, see the FAX-Setup Guide provided with the FAX Card.

Key Actions in Dial Action Table

➤ Selecting a Language for Voice Prompts

Key Action:

LANG 1 Lets a caller press the selected key to go to a mailbox and, from that point on, hear all the system voice prompts in Language 1. Enter the mailbox number in the *Key # (0-9, *, #) Number* field. See also example below.

LANG 2 Lets a caller press the selected key to go to a mailbox and, from that point on, hear all the system voice prompts in Language 2. Enter the mailbox number in the *Key # (0-9, *, #) Number* field. See also example below.

For example, suppose the following:

- The two languages are English and Spanish
- The default (system) bilingual mode is English and the trunk bilingual mode is English
- Call Routing Mailbox XXX is answering calls

When mailbox XXX answers a call, the caller will hear the system voice prompts (e.g., ***Please hold a moment***) in English. A caller can, however, press a key to go to a Call Routing Mailbox that plays its system voice prompts in Spanish. In addition, every other system voice prompt that the caller hears before hanging up will be in Spanish. And, if desired, the Spanish Call Routing Mailbox can have a key that will send a caller to an "English" mailbox.

See also *Bilingual Voice Prompts: An Overview* on page 12.

➤ Logging on to a Mailbox

Key Action:

LOGON Lets a caller press the selected key and their mailbox number to log on to their mailbox. No entry is required in the *Key # (0-9, *) Number* field. (In previous releases, LOGON was only available for the pound key).

➤ Transferring to Non-Extensions

Key Action:

UTRF Allows transfers to numbers outside the extension numbering plan

➤ Recording a Message for a Distribution List (For 2.02 Only)

Key Action:

GOTO, REC, TRF, UTRF Now lets an Automated Attendant caller access a Distribution Mailbox and record a message for its Distribution List. When the caller accesses the Distribution Mailbox, NVM-202 says: ***At the tone, you can record your message for*** (Distribution Mailbox number or name). When the caller finishes recording and hangs up, NVM-202 sends the message to each mailbox on the Distribution List.

In Maintenance

The Maintenance Menu has three new items on it:

- ARC - Archive Database
- DARC - De-Archive Database
- LINK - Establish link with Comm Port 1

In addition, one field has been added and one field has changed under the menu item, *Set Up Serial Communications Ports*.

In Maintenance (cont'd)

➤ Archive Database

This menu item shuts down NVM-202 and copies the system database to a directory on the NVM-202 hard disk.

DEFAULT: N/A
ENTRIES: Press ARC, Enter. Then follow the instructions on the screen.

➤ De-Archive Database

This menu item shuts down NVM-202 and replaces the current NVM-202 database with the archived database (see above). The De-Archive procedure does not restore any messages that were in the mailboxes (that is, the messages will be erased). Welcome Messages, Mailbox Greetings, Instruction Menus, etc. do get restored.

DEFAULT: N/A
ENTRIES: Press DARC, Enter. Then follow the instructions on the screen.

➤ Establish link with Comm Port 1

The menu item establishes a two-way link on NVM-202 COM1 without affecting NVM-202 operation. This lets you connect a device to COM1 and communicate with it through the NVM-202 cabinet. For example, you can connect the ONYX phone system's COM Card to COM1, then program the phone system through NVM-202.

Before you establish the link, you must allow the link mode for COM1. To do this, use the *Set Up Serial Communications Ports* command on the Maintenance Menu. Select COM1 and enter Y for the *Enable Link Mode* option. Also make sure the rest of the parameters for COM1 are compatible with the device you will be connecting to COM1. Do not, however, use a Baud Rate higher than 2400.

To cancel Link Mode once it has been activated, press Ctrl-R.

➤ Set Up Serial Communications Ports

Modem Initialization string

The modem initialization string for COM2 has been changed to be compatible with the internal modem. It is now: AT&FS0=9S2=255E0Q1&C1&D1^M. Avoid changing it.

Enable Link Mode

This option allows a two-way communications link on COM1. After you allow the link, you activate it by using the command *Establish link with Comm Port 1* on the Maintenance Menu (see also above).

In Diagnostics

➤ History Trace File Viewer (For 2.02 Only)

The History Trace File Viewer captures system history (events) in a file that can be viewed page by page or line by line. The Trace Viewer describes each event using an abbreviated format, which sometimes may consist solely of codes. In some cases you may need to contact Nitsuko America support staff to interpret the codes. The Trace Viewer also displays the date (once an hour), the time each event occurred, and a diamond marker (♦) to indicate the most recent event. The event listed just before the marker is the most recent event.

In Diagnostics (cont'd)

➤ History Trace File Viewer (For 2.02 Only)

The Trace Viewer file can store up to 3.5 mb of data. When the file reaches maximum size, the Trace Viewer goes back to the beginning of the file and records the new events over the old events, where the oldest event would be listed after the diamond marker; then the next oldest, and so on.

To activate the Trace Viewer from the Main Menu:

1. Select *Diagnostics Menu.*
2. Type password, if system asks for it, press ENTER. Default password is CTL. To change it, use *System Options.*
3. Type TV, ENTER. The screen shows a page of system activity. You can press F1 for instructions on moving around the Trace Viewer.
4. To exit the Trace mode, press ESC.

In User Features

➤ Message Notification

Message Notification can now call a user at three different numbers during the day. For each number, the user specifies the time of day that NVM-202 should start and stop calling that number. For example, the user may want NVM-202 to call their home number only from 6PM to 8AM. Once the schedules are set up, the user must select which notification numbers should be active. NVM-202 only calls notification numbers that are active. (The three notification numbers are referred to [in the voice prompts] as the first, second, and third notification groups.)

➤ Call Announcing

The user can now turn Call Announcing on or off through their mailbox (as long as Call Announcing has been enabled for the mailbox through terminal programming).

To turn on/off the mailbox OPtion called, Call Announcing:

1. Call your mailbox (see User's Guide).
2. Press **O P** (6 7).
3. Press **C A** (2 2).
4. Follow the voice prompts.

➤ Sending Messages Using Mailbox Names

After you record a message, you can now enter the mailbox **names** to receive the message, up to 10. This applies to messages you record by pressing:

- RS (Record and Send)
- MF (Message Forward While Listening)
- FD (Future Delivery Message)

The voice prompts tell you how to enter the names. And, NVM-202 still gives you the option of entering the mailbox numbers.

In User Features (cont'd)

➤ Changing the Listening Mode

This feature applies to Subscriber, Guest, and Message Center Mailboxes. NVM-202 now assigns a default listen mode to each mailbox (see page 18 in this supplement). The listen mode determines the type of messages that play when the user presses L to listen to their messages (see listen modes below). Users can change (override) the default listen mode, on a per call basis, right after they call their mailbox or while they are listening to their messages. When the user hangs up, NVM-202 reverts to the default listen mode.

The listen modes are as follows:

- **New Messages**
  These are messages that have not been listened to.
- **Saved Messages**
  These are messages that have been saved in a previous session.
- **Held Messages**
  These are messages that have been partially listened to in a previous session.
- **All Messages**
  These are the new, saved, and held messages.

To select the listen mode:

1. Call mailbox. NVM-202 tells the user how many new, held and/or saved messages there are.
2. Select the listen mode now or after pressing L to listen:
   Press 1 H to select held messages.
   Press 1 S to select saved messages.
   Press 1 N to select new messages.
   Press 1 A to select all messages.

Note: A message that a user (or the system) saves does not get placed in the "saved" message list until the user exits their mailbox. In other words, if the user presses SA to save a message, then 1S (in the same session) to listen to saved messages, NVM-202 will not play the message that was just saved. The user will only hear messages that were saved in a previous mailbox session. The same concept applies to held messages.

➤ Sending a Message to a Distribution List

Subscriber and Guest Mailbox users can now record and send a message to a Distribution List by entering the Distribution Mailbox name. The mailbox user calls their mailbox, presses RS as usual, then simply follows the voice prompts for entering a name. For programming details, see page 19.

On the Database Management Menu

Some changes have been made to the Database Management Menu (the system programming menu accessible through a System Administrator Mailbox). They are as follows:

- The System Initialization Menu:
  - Initialize Voice Mail for a Particular Phone System (1)
  - Hear Current System Configuration (2)
  - Configure in Favor of Msg Storage Capacity (3)
  - Configure in Favor Msg Sound Quality (4)
  - Re-initialize Voice Mail Database for Current Phone System (5)

  The initialization and re-initialization procedures install the default database and mailbox numbering plan.

On the Database Management Menu (cont'd)

- System Options Menu has a new item:
  - Assign Daily Department Schedule to Port (AS)
  By default Daily Department Schedule 1 is assigned to each port.

- Dial Action Tables Menu has two new items:
  - Primary Language (PL) GOTO
  - Alternate Language (AL) GOTO

  These options apply to systems that have voice prompts in two languages. You assign PL or AL and a mailbox number to a dialpad key. This lets a caller press the key to go to that mailbox ***and****, from that point on (until hang-up), hear all the system voice prompts in the Primary or Alternate Language (also referred to as Language 1 and Language 2).*

On the System Administrator Menu

➤ Recording Bilingual Prompts

NVM-202 can accommodate voice prompts in two languages. The NVM-202 *System Prompt Customization* feature lets **you** record the voice prompts in any two languages you choose. Or, if the factory-installed language meets one of your language requirements, you can use the *System Prompt Customization* feature to record voice prompts in the second language.

NVM-202 refers to the two languages as Language 1 and Language 2. In systems with one default (factory-installed) language, Language 1 and Language 2 are the same. In systems with two default languages or in systems that should have two languages, Language 1 is the language that appears first on the list below and Language 2 is the one that appears second:

English
Spanish
French
Italian
German
Russian
Portuguese
Greek
Polish
Norwegian
Swedish
Belgian
Dutch
Swiss
Japanese
Chinese
Thai
Korean
Arabic

If you record a substitute for a default prompt, then erase the substitute, NVM-202 will revert back to using the default prompt for the selected language.

See also *Bilingual Voice Prompts: An Overview* on page 12.

On the System Administrator Menu (cont'd)

Using a System Administrator Mailbox, you can record voice prompts for Language 1 or Language 2 as follows:

1. Call System Administrator Mailbox from any extension:
   For NVM-202: Dial NVM-202 master extension + Wait for answer + Dial Sys Admin Mailbox + Dial security code

   For NVM-2003: Lift handset + Press NVM-2003 Line key + Wait for answer + Dial Sys Admin Mailbox + Dial security code

   For other calling methods, see *Calling Your Subscriber Mailbox* in the User's Guide.

2. Press **S A** (7 2) for System Administrator Menu.

3. Press **P C** (7 2) for System Prompt Customization.

4. Press 1 for Language 1 or press 2 for Language 2 (see list on previous page).

5. To select a programmable prompt, enter the number of the prompt, then press the pound key. (The prompt numbers are on the prompt list located at the end of the Release Notes.)
   To go to the first programmable prompt, press the star key.
   To exit, press only the pound key.

6. To hear only the current prompt number, press N.
   To listen to the default prompt, press L
   To record a substitute prompt, press R.
   To verify the substitute prompt, press V.
   To erase the substitute prompt, press E.
   To select another programmable prompt, press the pound key.
   To go to the next programmable prompt, press the star key.
   To exit this feature, press the pound key twice.

Miscellaneous

➤ Hangup

Any number or string that can contain the "Special Codes" (e.g., Pause) can now also contain a Hangup (H). A Hangup forces NVM-202 to go on-hook for a certain interval of time. The length of the interval is determined by the Hangup timer in System Options.

➤ Analyzed Pause

Any number or string that can contain the "Special Codes" (e.g., Pause) can now also contain an Analyzed Pause (A). An Analyzed Pause is a 4-second pause. NVM-202 then dials the next digit only if there is no busy or reorder tone. Otherwise, NVM-202 terminates the call.

Voice Prompts

1. Thank you for calling.
2. Please hold a moment.
3. Please enter the mailbox number associated with the name.
4. Extension _____
5. Zero (last)
6. One (last)
7. Two (last)
8. Three (last)
9. Four (last)
10. Five (last)
11. Six (last)
12. Seven (last)
13. Eight (last)
14. Nine (last)
15. Ten
16. Eleven
17. Twelve
18. Thirteen
19. Fourteen

Voice Prompts (cont'd)

20. Fifteen

21. Sixteen

22. Seventeen

23. Eighteen

24. Nineteen

25. _____ is not available.

26. Start recording at the tone and press the pound key when you are done.

27. The record feature is not available at the moment because the system is storing the maximum number of messages. Please notify the system administrator.

28. Recording has been paused due to silence.
    To continue recording, press the star key.

29. Recording has been paused.
    To continue recording, press the star key.

30. Recording has been paused.
    To continue recording, press the star key.
    To listen to the message you recorded, press L.
    To erase the message and record a new one, press E.
    To send the message, press the pound key or hang up.

31. The message has been sent.

32. That is an invalid entry.

33. Mailbox _____

34. You have reached the recording limit.

35. Start recording at the tone. When you are done, press the pound key or hang up.

Voice Prompts (cont'd)

36. There is a problem with the system disk. Please notify the system administrator.

37. There is a problem with the system line card. Please notify the system administrator.

38. There is a problem with system memory. Please notify the system administrator.

39. Please enter your mailbox number.

40. Please enter your security code.

41. You have _____

42. _____ message.

43. _____ messages.

44. Ready

45. For a help message, press zero.

46. No

47. _____ is busy.

48. _____ does not answer.

49. To leave a message, press one.
For other options, press two.

50. Connecting

51. If you are calling from a Touch Tone phone, please dial the extension number you wish to reach or dial zero for assistance. If you are calling from a rotary dial phone, please stay on the line for assistance.

52. Please try again.

Voice Prompts (cont'd)

53. _____ does not exist.

54. Goodbye.

55. Star

56. Pound

57. Oh

58. Nineteen

59. Two Thousand

60. To accept this call, press 1. Otherwise, press the pound key.

61. Not programmable

62. Not programmable

63. Not programmable

64. Not programmable

65. Hundred

66. Thousand

67. Million

68. Billion

69. Your mailbox is almost full.

70. Your mailbox is full.

71. Please erase some messages.

Voice Prompts (cont'd)

72. There are no more messages. Ready to play the first message.

73. To exit your mailbox, press X again.
To return to the automated attendant, press the star key.
To return to your mailbox, press the pound key.

74. _____ messages will be erased when you exit your mailbox.

75. The message will be erased when you exit your mailbox.

76. The message has been saved.

77. from _____.

78. There are no more messages. Ready to play the last message.

79. Volume Up

80. This is maximum volume.

81. Volume Down

82. This is minimum volume.

83. This is normal volume.

84. Recording

85. Hello. I have a call for _____ .

86. Not programmable

87. To listen to the mailbox name, press L.
To record a new name, press R.
To erase the name, press E.
To go to another mailbox, press the pound key.
To exit this feature, press the pound key twice.

Voice Prompts (cont'd)

88. There is no name recorded for this mailbox.
To record a name, press R.
To go to another mailbox, press the pound key.
To exit this feature, press the pound key twice.

89. AM

90. PM

91. ____of January

92. ____ of February

93. ____ of March

94. ____ of April

95. ____ of May

96. ____ of June

97. ____ of July

98. ____ of August

99. ____ of September

100. ____ of October

101. ____ of November

102. ____ of December

103. To accept this call, press 1. Otherwise, hang up.

104. The message has been erased.

105. Listening has been paused. To continue listening, press the star key.

Voice Prompts (cont'd)

106. Please enter the mailbox numbers to receive this message, up to ten.
To use mailbox NAMES to specify the recipients, press star N.
To erase the message, press the star key twice.

107. Enter another mailbox number or do one of the following:
To send the message, press the pound key.
To specify recipients by name, press star N
To cancel the previous mailbox, press only the star key.
To erase the message, press the star key twice.

108. The previous mailbox number has been canceled.

109. You have already entered the maximum number of mailboxes.

110. That mailbox does not exist.

111. That mailbox cannot receive messages.

112. That mailbox is full.

113. That message has not been sent.

114. That list is empty.

115. The record feature is not available at the moment because there is no more space on the system disk. Please notify the system administrator.

116. To exit your mailbox, press X again.
To return to your mailbox, press the pound key.

117. To send the message, press the pound key.
To erase the message, press the star key twice.

118. The greeting is on.

119. The greeting is off.

120. The greeting has been erased.

Voice Prompts (cont'd)

121. To listen to your greeting, press L.
To turn your greeting off or on, press O.
To record a new greeting, press R.
To exit this feature, press the pound key.

122. There is no greeting for your mailbox.
To record a greeting, press R.
To exit this feature, press the pound key.

123. Please enter that person's mailbox number.

124. These are the options you have while listening to a recording:

To backup five seconds and listen, press B.
To backup to the beginning and listen, press B B.
To go ahead five seconds and listen, press G.
To pause while listening, press the star key.
To continue listening after a pause, press the star key.
To turn the volume up, press V U.
To turn the volume down, press V D.
To restore the volume to normal, press V N.
To exit the listen mode, press the pound key.

125. These are the options you have while making a recording:

To backup five seconds and listen to the recording, press B.
To backup to the beginning and listen to the recording, press B B.
To pause while recording, press the star key.
To continue recording after a pause, press the star key.
To erase the recording, press E.
To end recording, press the pound key.

126. To listen to your mailbox name, press L.
To record a new name, press R.
To erase your name, press E.
To exit this feature, press the pound key.

127. There is no name recorded for your mailbox.
To record your name, press R.
To exit this feature, press the pound key.

128. At the tone, please record your name so that I may announce your call. When you are done recording, press the pound key.

129. The name has been erased.

130. Not programmable

Voice Prompts (cont'd)

131. Not programmable

132. To listen to the broadcast message, press L.
To record a new broadcast message, press R.
To erase the broadcast message, press E.
To exit this feature, press the pound key.

133. There is no broadcast message.
To record a broadcast message, press R.
To exit this feature, press the pound key.

134. Not programmable

135. The broadcast message has been erased.

136. To listen to the welcome message for this mailbox, press L.
To record a new welcome message, press R.
To copy the welcome message from another mailbox, press C.
To erase the welcome message, press E.
To go to another welcome message mailbox, press the pound key.
To exit this feature, press the pound key twice.

137. There is no welcome message for this mailbox.
To record a welcome message, press R.
To copy the welcome message from another mailbox, press C.
To go to another welcome message mailbox, press the pound key.
To exit this feature, press the pound key twice.

138. To listen to your messages, press L.
To record and send a message, press R S.
For the complete Main Menu of features, press zero.

139. The welcome message has been erased.

140. To listen to the instruction menu for this mailbox, press L.
To record a new instruction menu, press R.
To copy the instruction menu from another mailbox, press C.
To erase the instruction menu, press E.
To go to another instruction menu mailbox, press the pound key.
To exit this feature, press the pound key twice.

141. There is no instruction menu for this mailbox.
To record an instruction menu, press R.
To copy the instruction menu from another mailbox, press C.
To go to another instruction menu mailbox, press the pound key.
To exit this feature, press the pound key twice.

Voice Prompts (cont'd)

142. To record and send a message, press R S.
For the complete Main Menu of features, press zero.

143. The instruction menu has been erased.

144. The mailbox number to receive your reply is not known.

145. Not programmable

146. Your call cannot go through because the extension number which left that message is not known.

147. To record a reply, press R E.

148. If you wish, you can record a comment at the tone and press the pound key when you are done. Otherwise, press only the pound key.

149. You may not forward this message because it has already been forwarded to you.

150. Enter the mailbox number of the message recipient you wish to check on.

151. All of your messages have been listened to.

152. _____ messages have not been listened to.

153. _____ message has not been listened to.

154. Not programmable

155. Enter your new security code, then press the pound key.
Or, to erase your security code, press zero, then the pound key.
To exit this feature, press only the pound key.

156. You have entered too many digits. Please try again.

157. Your security code has been erased.

Voice Prompts (cont'd)

158. Your new security code is _____.

159. If this is correct, press C.
If this is incorrect, press I.

160. Your security code has been changed.

161. Your security code has not been changed.

162. Not programmable

163. until _____

164. notifying you of messages from _____

165. notifying you of all messages _____

166. at this telephone number _____

167. at this radio pager number _____

168. at this digital pager number _____

169. Not programmable

170. Not programmable

171. Not programmable

172. Enter the hour you wish notification to begin. You must enter a two-digit number followed by an A for AM or a P for PM.
For example: eight AM would be entered as zero eight A.
To skip to the next setting, press the star key.
To exit, press the pound key.

173. Enter the hour you wish notification to end. You must enter a two-digit number followed by an A for AM or a P for PM.
For example: five PM would be entered as zero five P.
To skip to the next setting, press the star key.
To exit, press the pound key.

Voice Prompts (cont'd)

174. To be notified of all new messages, press A.
To be notified only when a message is sent to you from a specific person's mailbox, press S.
To skip to the next setting, press the star key.
To exit, press the pound key.

175. To be notified at an extension or telephone number, press N.
To be notified using a radio pager, press R.
To be notified using a digital pager, press D.
To skip to the next setting, press the star key.
To exit, press the pound key.

176. Enter the extension or telephone number, then press the pound key.
To skip to the next setting, press the star key.
To exit, press only the pound key.

177. Enter the telephone number of the radio pager, then press the pound key.
To skip to the next setting, press the star key.
To exit, press only the pound key.

178. Enter the telephone number of the digital pager, then press the pound key.
To skip to the next setting, press the star key.
To exit, press only the pound key.

179. To require that your security code be entered after accepting a notification call, press S.
Otherwise, press N.
To exit, press the pound key.

180. That notification number is restricted.

181. That feature is disabled.
To have it enabled, see your system administrator.

182. Answering schedule override is off.
To turn answering schedule override on, press O.
To exit, press the pound key.

183. Answering schedule override is on.

184. The override mailbox is _____

Voice Prompts (cont'd)

185. To turn answering schedule override off, press O.
To change the override mailbox, press C.
To exit, press the pound key.

186. Please enter the override mailbox number.

187. Not programmable

188. These are the options you have while listening to a message:
To record a reply, press R E.
To have the message forwarded, press M F.
To make a call to the sender of the message, press M C.
To exit the listen mode, press the pound key.
To hear the time, date, and sender of the message, press T I.
To save the message, press S A.
To erase the message, press E.
To listen to messages in reverse order, press R L.
To listen to the next message, press L.
To backup five seconds and listen, press B.
To backup to the beginning and listen, press B B.
To go ahead five seconds and listen, press G.
To pause while listening, press the star key.
To continue listening after a pause, press the star key.
To select the list of new messages, press 1 N.
To select the list of saved messages, press 1 S.
To select the list of held messages, press 1 H.
To select the list of all messages, press 1 A.
To turn the volume up, press V U.
To turn the volume down, press V D.
To restore the volume to normal, press V N.
To exit your mailbox, press X.

189. These are the options you have while recording a message:

To backup five seconds and listen to the recording, press B.
To backup to the beginning and listen to the recording, press B B.
To pause while recording, press the star key.
To continue recording after a pause, press the star key.
To erase the message you recorded, press E.
To hear the time and date of the recording, press T I.
To end recording, press the pound key.
To exit your mailbox, press X.

190. To listen to the announcement message, press L.
To record a new announcement message, press R.
To erase the announcement message, press E.
To go to another announcement mailbox, press the pound key.
To exit this feature, press the pound key twice.

Voice Prompts (cont'd)

191. There is no announcement message for this mailbox.
To record an announcement message, press R.
To go to another announcement mailbox, press the pound key.
To exit this feature, press the pound key twice.

192. Please enter the mailbox number for the Welcome message.

193. The announcement message has been erased.

194. Not programmable

195. There is no announcement message.

196. Not programmable

197. You have no messages.

198. You have one message.

199. No messages will be erased.

200. One message will be erased when you exit your mailbox.

201. Please enter the security code.

202. Auto help is on.
To turn auto help off, press O.
To exit this feature, press the pound key.

203. Auto help is off.
To turn auto help on, press O.
To exit this feature, press the pound key.

204. At the tone, you can leave your message for _____

205. At the tone, you can leave a message.

206. Hello. I have a message for _____

Voice Prompts (cont'd)

207. To accept this call, press 1.
Otherwise, hang up, and I will call again later.

208. Flash -

209. Wait for dial tone

210. Dialing pause

211. Monitored dialing pause

212. Not programmable

213. Please enter the mailbox number for the instruction menu.

214. Please enter the mailbox number for the announcement message.

215. Not programmable

216. Recording has been paused.
To continue recording, press the star key.
To end recording, press the pound key.
For a complete list of recording options, press zero.

217. Not programmable

218. You have reached the recording limit.
To listen to the message you recorded, press L.
To erase the message and record a new one, press E.
To send the message, press the pound key or hang up.

219. Not programmable

220. To leave a message, press 1.
To wait for the extension to become available, press 2.
For other options, press 3.

221. Not programmable

Voice Prompts (cont'd)

222. You have reached the recording limit.
To backup to the beginning and listen to the recording, press B B.
To erase the recording and start over, press E.
To end recording, press the pound key.
For a complete list of recording options, press zero.

223. Listening has been paused.
To continue listening, press the star key.
To exit the listen mode, press the pound key.
For a complete list of listening options, press zero.

224. Not programmable

225. Listening has been paused.
To continue listening, press the star key.
To backup to the beginning and listen, press B B.
To listen to the next message, press L.
To exit the listen mode, press the pound key.
For a complete list of listening options, press zero.

226. You have listened to the entire recording.
To backup to the beginning and listen, press B B.
To exit the listen mode, press the pound key.
For a complete list of listening options, press zero.

227. You have listened to the entire recording.
To exit the listen mode, press the pound key.

228. The message will be erased when you exit your mailbox.
To save the message, press S A.
To listen to the next message, press L.
To exit the listen mode, press the pound key.
For a complete list of listening options, press zero.

229. The message has been saved.
To erase the message, press E.
To listen to the next message, press L.
To exit the listen mode, press the pound key.
For a complete list of listening options, press zero.

230. To listen to the next message, press L.
To exit the listen mode, press the pound key.
For a complete list of listening options, press zero.

231. Not programmable

Voice Prompts (cont'd)

232. Not programmable

233. Not programmable

234. Not programmable

235. Not programmable

236. Calling _____

237. Not programmable

238. Not programmable

239. Not programmable

240. Zero (first)

241. One (first)

242. Two (first)

243. Three (first)

244. Four (first)

245. Five (first)

246. Six (first)

247. Seven (first)

248. Eight (first)

249. Nine (first)

250. Twenty

Voice Prompts (cont'd)

251. Twenty-one

252. Twenty-two

253. Twenty-three

254. Twenty-four

255. Twenty-five

256. Twenty-six

257. Twenty-seven

258. Twenty-eight

259. Twenty-nine

260. Thirty

261. Thirty-one

262. Thirty-two

263. Thirty-three

264. Thirty-four

265. Thirty-five

266. Thirty-six

267. Thirty-seven

268. Thirty-eight

269. Thirty-nine

Voice Prompts (cont'd)

270. Not programmable

271. Not programmable

272. Not programmable

273. The reply has been sent.

274. The message has been forwarded.

275. That mailbox is busy.

276. Not programmable

277. Not programmable

278. Going to the first message.

279. Going to the last message.

280. Not programmable

281. Not programmable

282. Not programmable

283. The paging message is on.

284. The paging message is off.

285. The message has not been recorded because it is too short.

286. You have not entered enough letters.

287. double-beep tone

288. press _____.

Voice Prompts (cont'd)

289. For _____,

290. Dial _____.

291. Please enter _____

292. _____ or more letters of the person's name, starting with their first name, then press the pound key.
To enter a Q or Z, press 1.
To exit the directory, press only the pound key.

293. Please enter ____

294. _____ or more letters of the person's name, starting with their last name, then press the pound key.
To enter a Q or Z, press 1.
To exit the directory, press only the pound key.

295. The paging message has been erased.

296. To listen to the paging message, press L.
To turn your paging message on or off, press O.
To record a new paging message, press R.
To erase the recording, press E.
To exit this feature, press the pound key.

297. There is no paging message for your mailbox.
To record a paging message, press R.
To exit this feature, press the pound key.

298. To leave a message, press 1.
To have the person paged, press 2.
For other options, press 3.

299. That name is not listed in the directory.

300. Or, to exit the directory, press the pound key.

301. Not programmable

302. Not programmable

Voice Prompts (cont'd)

303. Not programmable

304. Not programmable

305. Not programmable

306. To select a programmable prompt, enter the number of the prompt, then press the pound key.
To go to the first programmable prompt, press the star key.
To exit, press only the pound key.

307. To hear only the current prompt number, press N.
To listen to the default prompt, press L.
To record a substitute prompt, press R.
To verify the substitute prompt, press V.
To erase the substitute prompt, press E.
To select another programmable prompt, press the pound key.
To go to the next programmable prompt, press the star key.
To exit this feature, press the pound key twice.

308. There are currently no programmable prompts.

309. That prompt is not programmable.

310. Prompt Number _____

311. The substitute has been erased and the default prompt has been activated.

312. There is no substitute recorded for prompt number _____

313. The next programmable prompt has been selected.

314. Not programmable

315. Not programmable

316. 30 seconds of recorded silence - Not programmable

317. There is no Welcome Message recorded for that mailbox.

Voice Prompts (cont'd)

318. There is no Instruction Menu recorded for that mailbox.

319. The message has been copied.

320. The message is being copied.
Please wait.

321. Please enter the number of the mailbox containing the Welcome Message you wish to copy.

322. Please enter the number of the mailbox containing the Instruction Menu you wish to copy.

323. Not programmable

324. Not programmable

325. Not programmable

326. Welcome to the Mailbox Options Menu.
To change your security code, press S.
To change message notification, press N.
To change the auto help option, press A.
To change the Call Waiting option, press C W.
To change the Call Announcing option, press C A.
To exit this menu, press the pound key.

327. Call Waiting is on.
To turn Call Waiting off, press O.
To exit this feature, press the pound key.

328. Call Waiting is off.
To turn call Waiting on, press O.
To exit this feature, press the pound key.

329. You have received new messages.

330. Enter the time you wish the message to be sent.
You must enter a two-digit number for the hour, then a two-digit number for the minute, followed by an "A" for a.m. or a "P" for p.m. For example: Eight-Oh-Five AM would be entered as Zero-Eight, Zero-Five, A.
To re-enter the time if you make a mistake, press the star key.
To exit this feature, press the pound key.

Voice Prompts (cont'd)

331. Enter the date you wish the message to be sent.
You must enter a two-digit number for the month, then a two-digit number for the day. For example: January 25th would be entered as zero-one, two-five.
To re-enter the date if you make a mistake, press the star key.
To exit this feature, press the pound key.

332. The message will be delivered on _____

333. To listen to the Directory Dialing Message, press L.
To record a new Directory Dialing Message, press R.
To copy the Directory Dialing Message from another mailbox, press C.
To erase the Directory Dialing Message, press E.
To go to another Directory Dialing Message mailbox, press the pound key.
To exit this feature, press the pound key twice.

334. There is no Directory Dialing Message for this mailbox.
To record a Directory Dialing Message, press R.
To copy the Directory Dialing Message from another mailbox, press C.
To go to another Directory Dialing Message mailbox, press the pound key.
To exit this feature, press the pound key twice.

335. There is no Directory Dialing Message recorded for that mailbox.

336. The Directory Dialing Message has been erased.

337. Please enter the mailbox number for the Directory Dialing Message.

338. Please enter the mailbox number of the Directory Dialing Message you wish to copy.

339. Not programmable

340. Enter the new time of day for the voice mail system's clock.
You must enter a two-digit number for the hour, then a two-digit number for the minute, followed by an "A" for a.m. or a "P" for p.m. For example: Eight-Oh-Five AM would be entered as Zero-Eight, Zero-Five, A.
To re-enter the time if you make a mistake, press the star key.
To exit this feature, press the pound key.

Voice Prompts (cont'd)

341. Enter the new date for the voice mail system's clock.
You must enter a two-digit number for the month, day, and year.
For example: April 25th 1992 would be entered as Zero-Four, Two-Five, Nine-Two.
To re-enter the date if you make a mistake: press the star key.
To exit this feature, press the pound key.

342. The new system date and time will be _____

343. The system clock has been adjusted.

344. The system clock currently reads _____

345. Your security code is required to confirm system shutdown.

346. All voice mail ports are idle.

347. Activity has been detected in the voice mail system.
To allow the activity to cease before shutting down, press A.
To shut down immediately, press I.
To cancel the shut down, press the pound key.

348. Starting shut down.
Please stay on the line until notified that shutdown is complete.

349. Shut down of the Voice Mail system has been completed.
It is now safe to power-down or reset the Voice Mail computer.

350. Shut down of the Voice Mail system has been aborted.

351. Waiting for Voice Mail activity to cease.

352. Disregarding ongoing Voice Mail activity.

353. The system clock could not be adjusted to the specified settings.
Please try again.

354. Shutdown cannot be initiated from this mailbox.
Only System Administrator mailboxes which have been programmed with a security code are permitted to shut down the voice mail system.

Voice Prompts (cont'd)

355. The revision level of the Voice Mail system software is _____

356. It is no longer possible to abort the operation.

357. Your security code will NOT be requested.

358. Your security code will be requested.

359. Wait for Sound.

360. Enter the extension or telephone number, then press the pound key.
To enter special dialing codes, press the star key followed by the desired code letter. For example, pressing star-P will enter a non-monitored pause into the dial string. Similarly, you may press star-star or star-pound to enter the star or pound keys into the string.
To skip to the next setting, press only the star key.
To exit this feature, press only the pound key.

361. Enter the Radio Pager number, then press the pound key.
To enter special dialing codes, press the star key followed by the desired code letter. For example, pressing star-P will enter a non-monitored pause into the dial string. Similarly, you may press star-star or star-pound to enter the star or pound keys into the string.
To skip to the next setting, press only the star key.
To exit this feature, press only the pound key.

362. Enter the Digital Pager number, then press the pound key.
To enter special dialing codes, press the star key followed by the desired code letter. For example, pressing star-P will enter a non-monitored pause into the dial string. Similarly, you may press star-star or star-pound to enter the star or pound keys into the string.
To skip to the next setting, press only the star key.
To exit this feature, press only the pound key.

363. This message arrived on _____

364. _____ an unknown caller.

365. Not programmable

366. Not programmable

Voice Prompts (cont'd)

367. Not programmable

368. Not programmable

369. Not used for the English language. For other languages. this prompt is for the "and" between the numbers in a time setting. For example: In Spanish, it is the "y" in: Las ocho y cinco.

370. O (last)

371. _____ the First ____

372. _____ the Second _____

373. _____ the Third _____

374. _____ the Fourth _____

375. _____ the Fifth _____

376. _____ the Sixth _____

377. _____ the Seventh _____

378. _____ the Eighth _____

379. _____ the Ninth _____

380. _____ the Tenth _____

381. _____ the Eleventh _____

382. _____ the Twelfth _____

383 _____ the Thirteenth _____

384. _____ the Fourteenth _____

Voice Prompts (cont'd)

385. _____ the Fifteenth _____

386. _____ the Sixteenth _____

387. _____ the Seventeenth _____

388. _____ the Eighteenth _____

389. _____ the Nineteenth _____

390. _____ the Twentieth _____

391. _____ the Twenty-first _____

392. _____ the Twenty-second _____

393. _____ the Twenty-third _____

394. _____ the Twenty-fourth _____

395. _____ the Twenty-fifth _____

396. _____ the Twenty-sixth _____

397. _____ the Twenty-seventh _____

398. _____ the Twenty-eighth _____

399. _____ the Twenty-ninth _____

400. _____ the Thirtieth _____

401. _____ the Thirty-first _____

402. _____ AM (for 00-06)

403. _____ AM (for 06-12)

Voice Prompts (cont'd)

404. _____ PM (12-18)

405. _____ PM (18-00)

406. Not programmable

407. To work with the substitute prompts for Language 1, press 1.
Or, for language 2 prompts, press 2.
To exit this feature, press the pound key.

408. You may order one additional document.

409. To cancel this FAX transaction, press zero.

410. _____ twelve _____

411. _____ one _____

412. _____ two _____

413. _____ three _____

414. _____ four _____

415. _____ five _____

416. _____ six _____

417. _____ seven _____

418. _____ eight _____

419. _____ nine _____

420. _____ ten _____

421. _____ eleven _____

Voice Prompts (cont'd)

422. _____ twelve _____

423. _____ one _____

424. _____ two _____

425. _____ three _____

426. _____ four _____

427. _____ five _____

428. _____ six _____

429. _____ seven _____

430. _____ eight _____

431. _____ nine _____

432. _____ ten _____

433. _____ eleven _____

434. If you would like to be called back to receive your FAX order, press C.
Or, if the FAX machine to receive your order is connected to the telephone you are using, press F.

435. That is an invalid entry.

436. Please enter the number that I will need to dial to reach your FAX machine, then press the pound key.
For long-distance calls, please include the leading '1' and, if necessary, the area code.
To cancel this FAX transaction, press only the pound key.

437. You have entered too many digits.

438. I'm sorry. You did not enter a complete FAX Callback number.

439. I'm sorry. I cannot make a call to your FAX machine at the telephone number that you have entered.

440. Your FAX telephone number is _____

Voice Prompts (cont'd)

441. If this is correct, press C.
If this is incorrect, press I.

442. Or, to hear a list of available documents, press the star key.

443. You may order up to _____

444. You may order only one document.

445. _____ documents.

446. You have ordered the maximum number of documents.

447. Please enter the number of the document you would like to receive, then press the pound key.

448. When you are finished ordering, press only the pound key.

449. I'm sorry. You did not enter a complete document number.

450. I'm sorry. There is no document assigned to that number.

451. To have your extension number appear on your FAX order, enter that number now, then press the pound key.
Otherwise, press only the star key.
To cancel this FAX transaction, press only the pound key.

452. I'm sorry. You did not enter a complete extension number.

453. You entered extension number _____

454. Your FAX order will be sent shortly.
Thank you for calling.

455. To receive the documents you have requested, press the start key on your FAX machine when you hear the tone.

456. Ready.

457. A security code is required to complete this FAX transaction.
Please enter the security code now.

458. You may order an additional _____

459. A security code is required to access the document number you have selected. Please enter the security code now.

460. I'm sorry. All of our FAX lines are in use.

461. Enter the document ID number you wish to assign to the FAX that you will be sending. The number may be up to ten digits and must be followed by the pound key.
If you make a mistake, press the star key.
To exit this feature, press only the pound key.

Voice Prompts (cont'd)

462. There is already a document assigned to that number.

To replace the existing document, press R.
To enter a new document number, press the pound key.

463. There is no document currently assigned to that number.
To assign the new document to that number, press A.
To enter a different document number, press the pound key.

464. To send the document to be stored, press the start key on your FAX machine when you hear the tone.

465. If you wish to order your documents now and be called back, press C. Otherwise, press zero.

466. Please try again later.

467. Please enter the number of the document you would like to receive, then press the pound key.
To cancel this FAX transaction, press only the pound key.

468. Your FAX transaction has been cancelled.

469. Call Announcing is ON.
To turn Call Announcing OFF, press O.
To exit this feature, press the pound key.

470. Call Announcing is OFF.
To turn Call Announcing ON, press O.
To exit this feature, press the pound key.

471. To enter another mailbox name, press N.
To send the message, press the pound key.
To specify recipients by their mailbox numbers, press star N.
To cancel the previous mailbox, press ONLY the star key.
To erase the message, press the star key twice.

472. _____ or more letters of the person's name, then press the pound key. To enter a Q or Z, press 1. To cancel this directory selection, press only the pound key.

473. You may enter the names of up to ten mailboxes to receive this message.
To enter a mailbox name, press N.
To specify recipients by their mailbox numbers, press star N.
To erase the message, press the star key twice.

Voice Prompts (cont'd)

474. Analyzed Dialing Pause

475. Selecting the MAIN message list.
All of your messages are in this list.

476. Selecting the NEW message list.
Only messages that have not yet been heard will be in this list.
This list will not change until after you have exited your mailbox.

477. Selecting the Saved message list.
Only messages that were saved during a previous mailbox session will be in this list. This list will not change until after you have exited your mailbox.

478. To hear a summary of the current settings for all three of your message notification groups, press S.
To select which of the three groups are to be active, press A.
To review or modify the parameters of a group, press M.
To exit this feature, press the pound key.

479. The First message notification group is disabled.

480. The First notification group is disabled.
To enable the First group, press E F.

481. The First message notification group is enabled, and it is active from _____

482. The First notification group is enabled.
To disable the First group, press D F.

483. The Second message notification group is disabled.

484. The Second notification group is disabled.
To enable the Second group, press E S.

485. The Second message notification group is enabled, and it is active from ____

486. The Second notification group is enabled.
To disable the Second group, press D S.

487. The Third message notification group is disabled.

Voice Prompts (cont'd)

488. The Third notification group is disabled.
To enable the Third group, press E T.
To exit, press the pound key.

489. The Third message notification group is enabled, and it is active from ____

490. The Third notification group is enabled.
To disable the Third group, press D T.
To exit, press the pound key.

491. Please select the message notification group that you would like to review or modify.
For the First notification group, press F.
For the Second notification group, press S.
For the Third notification group, press T.
Or, to exit, press the pound key.

492. When enabled, the First notification group will be active from ____

493. When enabled, the Second notification group will be active from _____

494. When enabled, the Third notification group will be active from _____

495. None

496. Selecting the HELD message list.
Only messages that have been partially heard, but were not SAVED during a previous mailbox session, will be in this list. This list will not change until after you have exited your mailbox.

497. Going to the first new message.

498. Going to the last new message.

499. Going to the first saved message.

500. Going to the last saved message.

501. Going to the first held message.

Voice Prompts (cont'd)

502. Going to the last held message.

503. You have no new messages.

504. You have no saved messages.

505. You have no held messages.

506. There are no more new messages.
Ready to play the first new message.

507. There are no more new messages.
Ready to play the last new message.

508. There are no more saved messages.
Ready to play the first saved message.

509. There are no more saved messages.
Ready to play the last saved message.

510. There are no more held messages.
Ready to play the first held message.

511. There are no more held messages.
Ready to play the last held message.

512. You have _____

513. _____ and _____

514. You have no messages.

515. You have one new message _____

516. You have one new message.

517. You have one held message _____

518. You have one held message.

Voice Prompts (cont'd)

519. You have one saved message.

520. _____ new messages _____

521. _____ new messages.

522. _____ saved messages.

523. _____ held messages.

524. _____ held messages _____

525. _____ one held message _____

526. _____ and one saved message.

527. _____ and one held message.

528. To listen to your new messages, press L.
To record and send a message, press R S.
For the complete Main Menu of features, press zero.

529. To listen to your held messages, press L.
To record and send a message, press R S.
For the complete Main Menu of features, press zero.

530. To listen to your saved messages, press L.
To record and send a message, press R S.
For the complete Main Menu of features, press zero.

531. The message will be erased when you exit your mailbox.
To save the message, press S A.
To listen to the next new message, press L.
To exit the listen mode, press the POUND key.
For a complete list of listening options, press zero.

532. The message will be erased when you exit your mailbox.
To save the message, press S A.
To listen to the next held message, press L.
To exit the listen mode, press the POUND key.
For a complete list of listening options, press zero.

Voice Prompts (cont'd)

533. The message will be erased when you exit your mailbox.
To save the message, press S A.
To listen to the next saved message, press L.
To exit the listen mode, press the POUND key.
For a complete list of listening options, press zero.

534. The message has been saved.
To erase the message, press E.
To listen to the next new message, press L.
To exit the listen mode, press the POUND key.
For a complete list of listening options, press zero.

535. The message has been saved.
To erase the message, press E.
To listen to the next held message, press L.
To exit the listen mode, press the POUND key.
For a complete list of listening options, press zero.

536. The message has been saved.
To erase the message, press E.
To listen to the next saved message, press L.
To exit the listen mode, press the POUND key.
For a complete list of listening options, press zero.

537. I'm sorry.
The System Line is currently in use.

538. Not programmable

539. Not programmable

540. Forty

541. Forty-one

542. Forty-two

543. Forty-three

544. Forty-four

545. Forty-five

Voice Prompts (cont'd)

546. Forty-six

547. Forty-seven

548. Forty-eight

549. Forty-nine

550. Fifty

551. Fifty-one

552. Fifty-two

553. Fifty-three

554. Fifty-four

555. Fifty-five

556. Fifty-six

557. Fifty-seven

558. Fifty-eight

559. Fifty-nine

560. Sixty

561. Sixty-one

562. Sixty-two

563. Sixty-three

564. Sixty-four

Voice Prompts (cont'd)

565. Sixty-five

566. Sixty-six

567. Sixty-seven

568. Sixty-eight

569. Sixty-nine

570. Seventy

571. Seventy-one

572. Seventy-two

573. Seventy-three

574. Seventy-four

575. Seventy-five

576. Seventy-six

577. Seventy-seven

578. Seventy-eight

579. Seventy-nine

580. Eighty

581. Eighty-one

582. Eighty-two

583. Eighty-three

Voice Prompts (cont'd)

584. Eighty-four

585. Eighty-five

586. Eighty-six

587. Eighty-seven

588. Eighty-eight

589. Eighty-nine

590. Ninety

591. Ninety-one

592. Ninety-two

593. Ninety-three

594. Ninety-four

595. Ninety-five

596. Ninety-six

597. Ninety-seven

598. Ninety-eight

599. Ninety-nine

600. There is no trunk access dial string for long-distance notification calls. Enter a string of up to 30 digits, then press the pound key.
To enter special dialing codes, press the star key followed by the desired code letter. For example, pressing star-P will enter a non-monitored pause into the dial string. Similarly, you may press star-star or star-pound to enter the star or pound keys into the string.
To exit this feature, press only the pound key.

Voice Prompts (cont'd)

601. The trunk access dial string for local notification calls is _____

602. Enter a string of up to 30 digits, then press the pound key.
To clear the local trunk access dial string, press star-zero.
To enter special dialing codes, press the star key followed by the desired code letter. For example, pressing star-P will enter a non-monitored pause into the dial string. Similarly, you may press star-star or star-pound to enter the star or pound keys into the string.
To exit this feature, press only the pound key.

603. There is no trunk access dial string for local notification calls.
Enter a string of up to 30 digits, then press the pound key.
To enter special dialing codes, press the star key followed by the desired code letter. For example, pressing star-P will enter a non-monitored pause into the dial string. Similarly, you may press star-star or star-pound to enter the star or pound keys into the string.
To exit this feature, press only the pound key.

604. The delay time, in minutes, before the next notification callout, following a ring-no-answer attempt, is _____

605. Enter a new delay time, from 1 to 999 minutes, then press the pound key.
Or, to exit this feature, press only the pound key.

606. The delay time, in minutes, between non-pager message notification callout attempts is _____

607. Enter a new delay time, from 1 to 999 minutes, then press the pound key.
Or, to exit this feature, press only the pound key.

608. The maximum number of rings per notification callout attempt _____

609. Enter a new number, from 1 to 99, for the notification ring limit, then press the pound key.
Or, to exit this feature, press only the pound key.

610. During a pager message notification call, the delay time, in seconds, before playing the pager announcement is _____

Voice Prompts (cont'd)

611. Enter a new delay time, from 0 to 99 seconds, then press the pound key.
Or, to exit this feature, press only the pound key.

612. The delay time, in minutes, between pager message notification callout attempts is _____

613. Enter a new delay time, from 1 to 999 minutes, then press the pound key.
Or, to exit this feature, press only the pound key.

614. Message notifications to pagers are currently programmed to continue until the notification callout limit is reached.
To have pager notification callout attempts continue until acknowledged, press A.
To exit this feature, press the pound key.

615. Message notifications to pagers are currently programmed to continue until acknowledged.
To have pager notification callout attempts continue only until the notification callout limit is reached, press C.
To exit this feature, press the pound key.

616. The Message Notification callback number for Digital Pagers is _____

617. Enter a string of up to 12 digits, then press the pound key.
To clear the Digital Pager Callback string, press star-zero.
Or, to exit this feature, press only the pound key.

618. No Message Notification callback number for Digital Pagers has been programmed.
Enter a string of up to 12 digits, then press the pound key.
Or, to exit this feature, press only the pound key.

619. During a message notification call to a digital pager, the delay time, in seconds, before dialing the callback number is _____

620. Enter a new delay time, from 0 to 99 seconds, then press the pound key.
Or, to exit this feature, press only the pound key.

621. The length limit, in seconds, for messages left in non-subscriber mailboxes, is currently _____

Voice Prompts (cont'd)

622. Enter a length limit, from 1 to 999 seconds, then press the pound key.

Or, to exit this feature, press only the pound key.

623. The length limit, in seconds, for messages left in subscriber mailboxes, is currently _____

624. Enter a length limit, from 1 to 999 seconds, then press the pound key.
Or, to exit this feature, press only the pound key.

625. Daily Maintenance is currently programmed to occur at _____

626. Enter the time you wish Daily Maintenance to take place.
You must enter a two-digit number for the hour, then a two-digit number for the minute, followed by an "A" for a.m. or a "P" for p.m. For example: Three fifteen a.m. would be entered as zero-three, one-five, A.
To disable Daily Maintenance, press the star key.
To exit this feature, press the pound key.

627. Daily Maintenance is currently disabled.
To enable Daily Maintenance, you must select the time you wish Daily Maintenance to take place. You must enter a two-digit number for the hour, then a two-digit number for the minute, followed by an "A" for a.m. or a "P" for p.m. For example: Three fifteen a.m. would be entered as zero-three, one-five, A
To exit this feature, press the pound key.

628. Measured in tenths-of-a-second, the longest allowable period of recorded silence is _____

629. Enter a new value, from 2 to 30 tenths of a second, for the longest allowable period of recorded silence. Then press the pound key.
To permit unlimited recorded silence, press the star key.
To exit this feature, press only the pound key.

630. There is currently no limit on periods of recorded silence.
To limit recorded silence, enter a value, from 2 to 30 tenths of a second, for the longest allowable period of recorded silence. Then press the pound key.
To exit this feature, press only the pound key.

Voice Prompts (cont'd)

631. Please enter the number, one, two or three, of the Dial Action Table you wish to work on.
Or, to return to the Database Management Menu, press the pound key.

632. Not programmable

633. Enter a string of up to 30 digits to be used with the selected Dial Action function, then press the pound key. To enter special dialing codes, press the star key followed by the desired code letter. For example, pressing star-P will enter a non-monitored pause into the dial string. Similarly, you may press star-star or star-pound to enter the star or pound keys into the string.
To exit this feature, press only the pound key.

634. Please press the key with which you would like to associate this action. Valid selections include keys zero thru 8, as well as the star key which selects the timeout action.
To cancel this dial-action assignment, press only the pound key.

635. If you are sure that you want to restore the default Dial Action Table configuration, press Y.
To leave the table unchanged, press N.

636. The dial action programming for key 0 is _____

637. The dial action for key 1 is _____

638. The dial action for key 2 is _____

639. The dial action for key 3 is _____

640. The dial action for key 4 is _____

641. The dial action for key 5 is _____

642. The dial action for key 6 is _____

643. The dial action for key 7 is _____

644. The dial action for key 8 is _____

Voice Prompts (cont'd)

645. The dial action for key 9 is _____

646. The dial action for the star key is _____

647. The dial action for the pound key is _____

648. The timeout dial action programming is _____

649. Undefined.

650. Go to the caller-dialed Mailbox.

651. Go to Mailbox _____

652. Transfer to the caller-dialed extension.

653. Transfer to extension _____

654. Unscreened transfer to the caller-dialed extension.

655. Unscreened transfer to extension _____

656. Hang up

657. Log on

658. Record a message in the caller-dialed mailbox.

659. Record a message in mailbox _____

660. Directory Dialing using first names

661. Directory Dialing using last names

662. Enter the Department Schedule Table number, from 1 thru 4, that you wish to program.
Or, to return to the Database Management Menu, press the pound key.

Voice Prompts (cont'd)

663. The workday for this department begins at _____

664. To modify the time that the workday begins for this department, enter the new time now.
You must enter a two-digit number for the hour, then a two-digit number for the minute, followed by an "A" for a.m. or a "P" for p.m. For example: Eight a.m. would be entered as zero-eight, zero-zero, A. To erase the workday starting time, press the star key.
To exit this feature, press the pound key.

665. There is no workday starting time programmed for this department.
To set the time that the workday begins for this department, enter that time now. You must enter a two-digit number for the hour, then a two-digit number for the minute, followed by an "A" for a.m. or a "P" for p.m. For example: Eight a.m. would be entered as zero-eight, zero-zero, A.
To exit this feature, press the pound key.

666. The second half of the workday for this department begins at _____

667. To modify the time that the second half of the workday begins for this department, enter the new time now.
You must enter a two-digit number for the hour, then a two-digit number for the minute, followed by an "A" for a.m. or a "P" for p.m. For example: Noon would be entered as one-two, zero-zero, P. To erase the mid-workday starting time, press the star key.
To exit this feature, press the pound key.

668. There is no mid-workday starting time programmed for this department.
To set the time that the second half of the workday begins for this department, enter that time now. You must enter a two-digit number for the hour, then a two-digit number for the minute, followed by an "A" for a.m. or a "P" for p.m. For example: Noon would be entered as one-two, zero-zero, P.
To exit this feature, press the pound key.

669. The workday for this department ends at _____

670. To modify the time that the workday ends for this department, enter the new time now. You must enter a two-digit number for the hour, then a two-digit number for the minute, followed by an "A" for a.m. or a "P" for p.m. For example: Five p.m. would be entered as zero-five, zero-zero, P.
To erase the workday quitting time, press the star key.
To exit this feature, press the pound key.

Voice Prompts (cont'd)

671. There is no workday quitting time programmed for this department.
To set the time that the workday ends for this department, enter that time now. You must enter a two-digit number for the hour, then a two-digit number for the minute, followed by an "A" for a.m. or a "P" for p.m. For example: Five p.m. would be entered as zero-five, zero-zero, P.
To exit this feature, press the pound key.

672. The workweek for this department is from _____

673. To modify the day that the workweek begins for this department, specify the new day now by entering the first two letters of the day. For example: Monday would be entered as M O, which is six, six.
To erase the workweek definition for this department, press the star key.
To exit this feature, press the pound key.

674. The workweek is not defined for this department.
To specify the day on which the workweek for this department starts, enter it now by pressing the first two letters of the day. For example: Monday would be entered as M O, which is six, six.
Or, to exit this feature, press the pound key.

675. To specify the day on which the workweek for this department ends, enter it now by pressing the first two letters of the day. For example: Friday would be entered as F R, which is three, seven.
Or, to exit this feature, press the pound key.

676. If you are sure that you want to restore the default Department Schedule Table configuration, press Y.
To leave the table unchanged, press N.

677. Going to Mailbox number _____

678. _____ through _____

679. _____ Sunday _____

680. _____ Monday _____

681. _____ Tuesday _____

682. _____ Wednesday _____

Voice Prompts (cont'd)

683. _____ Thursday _____

684. _____ Friday _____

685. _____ Saturday _____

686. The starting time for each workday is _____

687. The mid-day time for each workday is _____

688. The end-of-day time for each workday is _____

689. The weekend begins _____

690. Welcome to the Database Management Menu.
For System Options, press S O.
For Notification Options, press N O.
For Mailbox Programming, press M P.
For Daily Department Schedule Setup, press D S.
For Dial-Action Programming, press D A.
To set the System Time, press T I.
To set the System Date, press D T.
To hear the System Version number, press S V.
For System Initialization, press S I.
To prepare the system for Power-Down, press P D.
To exit this menu, press the pound key.

691. Please select from the following list of system options.
To set the Daily Maintenance time, press D M.
To set the Subscriber Message length limit, press S L.
To set the Non-Subscriber Message length limit, press N L.
To set the length limit of recorded silence, press R S.
To return to the Database Management Menu, press the pound key.

692. Please select from the following list of notification options.
To set the time to wait before repeating a callout attempt following a completed non-pager notification call, press O K.
To set the time to wait before the next callout attempt following a Ring-No-Answer non-pager notification call, press N A.
To set the time to wait before the next callout attempt following a Busy notification call, press B Y.
To set the limit for the number of notification call attempts, press C L.
To set the limit for the number of rings per notification callout, press R L.
To set the Local Line Access dial stream, press L O.
To set the Long Distance Line Access dial stream, press L D.
To set pager notification parameters, press P N.
To return to the Database Management Menu, press the pound key

Voice Prompts (cont'd)

693. Please select from the following list of pager notification options.
To set the time to wait before repeating a callout attempt following a completed notification call to a pager, press R.
To set the limit of how long to continue pager notifications, press L.
To store the Digital Pager Callback Number, press C.
To set the delay between when a notification call is answered and dial-out of the Digital Pager Callback Number, press D.
To set the time to wait before playing the notification message to a Radio Pager, press N.
To return to the Notification Options Menu, press the pound key.

694. Please select from the following list of mailbox options.
To assign Trunk Mailboxes to specific Department Schedules, press T S.
To program Messaging Mailbox parameters, press M M.
For programming Distribution List Mailboxes, press D L.
To select the method for terminating calls to an Announcement Mailbox, press A T.
To specify the number of repetitions of the message in an Announcement Mailbox, press A M.
To specify System Administrator Mailboxes, press S A.
To delete the security code of a particular mailbox, press D S.
To return to the Database Management Menu, press the pound key.

695. Not programmable

696. Please select from the following list of department schedule programming options.
To hear the schedule currently specified for the selected department, press H S.
To specify the starting time of each workday in the selected department, press S T.
To select a mid-workday time to change call-routing for the selected department, press A T.
To specify the ending time of each workday in the selected department, press E T.
To define the days in the workweek, press D W.
To recall the original scheduling for the selected department, press O S.
To exit this feature, press the pound key twice.

697. Welcome to the Main Menu of features.
To listen to your messages, press L.
To record and send a message, press R S.
To check on a message you sent, press C M.
To record a greeting for your mailbox, press G.
To record a name for your mailbox, press R N.
To record and send a future delivery message, press F D.
To record a paging message, press P G.
For Mailbox Options, press O P.
To hear the Time and Date, press T I.

Voice Prompts (cont'd)

For System Administrator options, press S A.
For System Database Management, press D M.
To select the list of new messages, press 1 N.
To select the list of saved messages, press 1 S.
To select the list of held messages, press 1 H.
To select the list of all messages, press 1 A.
To exit your mailbox, press X.

698. Please enter the mailbox number.
Or, to exit, press the pound key.

699. Please enter the mailbox number or, to increment to the next mailbox, press the star key.
To exit, press the pound key.

700. _____ none.

701. Please select from the following list of initialization options.
To initialize the Voice Mail database for use with a particular telephone system, press 1.
To hear the current Voice Mail configuration, press 2.
To configure the Voice Mail to optimize in favor of message storage capacity rather than message sound quality, press 3.
To configure for optimal sound quality rather than storage capacity, press 4.
To re-initialize the Voice Mail database, press 5.
To return to the Database Management Menu, press the pound key.

702. This Voice Mail system may only be initialized for use with the current telephone system type.
To re-initialize the Voice Mail database, press the star key followed by the pound key.

703. Enter the code number for the telephone system which is to be used with the Voice Mail, then press the pound key.

704. Valid code numbers are one ____.

705. Valid code numbers are one and two.

706. Valid code numbers are one, two, and three.

707. WARNING! All previously-recorded messages will be erased when the data compression rate is changed. Your security code is required in order to make this modification.

Voice Prompts (cont'd)

708. WARNING! All Voice Mail parameters will be reset to their default values if the system is reinstalled. Also, all previously-recorded messages will be erased. Your security code is required in order to initiate reinstallation.

709. System Installation parameters may not be modified from this mailbox. Only System Administrator mailboxes which have been programmed with a security code are permitted to re-initialize the voice mail system.

710. All other voice mail ports are idle.

711. Activity has been detected in the voice mail system.
To allow the activity to cease before re-initialization, press A.
To re-initialize immediately, press I.
To cancel this operation, press the pound key.

712. The Voice Mail database will now be updated and all messages erased.
Please stay on the line until notified that the operation has been completed. The process may take up to two minutes to complete.
To cancel this operation, press the pound key now.

713. Not programmable

714. Re-initialization of the Voice Mail system has been aborted.

715. Waiting for Voice Mail activity to cease.

716. Disregarding ongoing Voice Mail activity.

717. WARNING! The phone system you have selected is the same as is currently in use. All Voice Mail parameters will be reset to their default values if the system is reinstalled. Also, all previously-recorded messages will be erased. Your security code is required in order to initiate reinstallation.

718. WARNING! The data compression option you have selected is the same as is currently in use. If this command is processed to completion, all previously-recorded messages will be erased from the Voice Mail system. Your security code is required in order to proceed.

Voice Prompts (cont'd)

719. The number of times this Announcement mailbox will repeat its announcement is _____

720. Welcome to the System Administrator Menu.
For the Broadcast message, press B R.
For Welcome messages, press W.
For Instruction Menu messages, press I.
For Directory Dialing messages, press D.
For Announcement messages, press A N.
For Mailbox Names, press N.
For Answering Schedule Override, press S O.
For System Prompt Customization, press P C.
To set the system time, press T I.
To set the system date, press D T.
To hear the System Version Number, press S V.
To prepare the system for Power-Down, press P D.
To exit this menu, press the pound key.

721. Not programmable

722. Not programmable

723. Not programmable

724. Enter a new number, from 0 thru 10, then press the pound key.
To go to another mailbox, press only the pound key.
To exit this feature, press the pound key twice.

725. This Announcement mailbox is currently programmed to Hang Up after playing its message.
To disable the Hang-Up option, press D.
To go to another Announcement mailbox, press the pound key.
To exit this feature, press the pound key twice.

726. The Hang-Up option for this Announcement mailbox is currently disabled.
To enable the Hang-Up option, press E.
To go to another Announcement mailbox, press the pound key.
To exit this feature, press the pound key twice.

727. To add mailboxes to the distribution list, press A.
To delete mailboxes from the list, press D.
To hear which mailboxes are in the list, press L.
To remove all mailboxes from the list, press R.
To go to another Distribution mailbox, press the pound key.
To exit this feature, press the pound key twice.

Voice Prompts (cont'd)

728. Please enter the mailbox number you wish to add to the distribution list.
Or, to exit, press the pound key.

729. The distribution list is full. No more mailboxes may be added to this list.

730. That mailbox is already in the distribution list.

731. Please enter the mailbox number you wish to delete from the distribution list.
Or, to exit, press the pound key.

732. If you are sure that you want to remove all mailboxes from the list, press Y.
To leave the list unchanged, press N.

733. That mailbox is not in the distribution list.

734. This mailbox is currently allowed to perform System Administrator functions.
To disable the System Administrator option, press D.
To go to another mailbox, press the pound key.
To exit this feature, press the pound key twice.

735. This mailbox is currently restricted from performing System Administrator functions.
To enable the System Administrator option, press E.
To go to another mailbox, press the pound key.
To exit this feature, press the pound key twice.

736. This Trunk mailbox is currently using Department schedule table ____.

737. Enter a new Department Schedule Table number, from 1 thru 4, or press the star key for NONE.
Then press the pound key.
Or, to go to another mailbox, press only the pound key.
To exit this feature, press the pound key twice.

738. This Trunk mailbox is not currently using a Department Schedule Table.
Enter a Department Schedule Table number, from 1 through 4, then press the pound key.
Or, to go to another mailbox, press only the pound key.
To exit this feature, press the pound key twice.

Voice Prompts (cont'd)

739. If you wish to delete the security code for this mailbox, press D.
Otherwise, press the pound key.

740. This mailbox is currently programmed to block Auto-Attendant Calls.
To disable blocking of Auto-Attendant calls, press D.
To go to another mailbox, press the pound key.
To exit this feature, press the pound key twice.

741. This mailbox is currently programmed to allow calls from the Auto-Attendant.
To enable blocking of Auto-Attendant calls, press E.
To go to another mailbox press the pound key.
To exit this feature, press the pound key twice.

742. The Call Announcing option for this mailbox is enabled.
To disable Call Announcing, press D.
To go to another mailbox, press the pound key.
To exit this feature, press the pound key twice.

743. The Call Announcing option for this mailbox is disabled.
To enable Call Announcing, press E.
To go to another mailbox, press the pound key.
To exit this feature, press the pound key twice.

744. The Next Call Routing Mailbox for this mailbox is _____

745. Please enter a new Next Call Routing Mailbox number, or press the star key for NONE.
Or, to go to another mailbox, press the pound key.
To exit this feature, press the pound key twice.

746. There is no Next Call Routing Mailbox assigned to this mailbox.
Please enter a Next Call Routing Mailbox number. Or, to go to another mailbox, press the pound key.
To exit this feature, press the pound key twice.

747. The maximum number of messages allowed for this mailbox is _____

748. Enter a new maximum number of messages, from 1 thru 1000, then press the pound key.
Or, to go to another mailbox, press only the pound key.
To exit this feature, press the pound key twice.

Voice Prompts (cont'd)

749. This mailbox is currently permitted to use outside lines for Message Notification calls.
To limit the mailbox to internal numbers, press I.
To go to another mailbox, press the pound key.
To exit this feature, press the pound key twice.

750. This mailbox is currently limited to using only internal numbers for Message Notification calls.
To allow outside lines to be used, press O.
To go to another mailbox, press the pound key.
To exit this feature, press the pound key twice.

751. Not programmable

752. Not programmable

753. Not programmable

754. This is the wrong type of mailbox.

755. The Message-Waiting Lamp option is currently enabled for this mailbox.
To disable the Lamping option, press D.
To go to another mailbox, press the pound key.
To exit this feature, press the pound key twice.

756. The Message-Waiting Lamp option is currently disabled for this mailbox.
To enable the Lamping option, press E.
To go to another mailbox, press the pound key.
To exit this feature, press the pound key twice.

757. The default Message Playback direction for this mailbox is currently Last-In-First-Out.
To change it to First-In-First-Out, press F.
To go to another mailbox, press the pound key.
To exit this feature, press the pound key twice.

758. The default Message Playback direction for this mailbox is currently First-In-First-Out.
To change it to Last-In-First-Out, press L.
To go to another mailbox, press the pound key.
To exit this feature, press the pound key twice.

Voice Prompts (cont'd)

759. The Forced Unscreened Transfer option is currently enabled for this mailbox.
To disable this option, press D.
To go to another mailbox, press the pound key.
To exit this feature, press the pound key twice.

760. The Forced Unscreened Transfer option is currently disabled for this mailbox.
To enable this option, press E.
To go to another mailbox, press the pound key.
To exit this feature, press the pound key twice.

761. The maximum number of callout attempts for message notification is _____

762. Enter a new notification callout limit, from 1 thru 99, then press the pound key.
Or, to exit this feature, press only the pound key.

763. The delay time, in minutes, before the next notification callout, following a busy attempt, is _____

764. Enter a new delay time, from 1 to 999 minutes, then press the pound key.
Or, to exit this feature, press only the pound key.

765. The trunk access dial string for long-distance notification calls is _____

766. Enter a string of up to 30 digits, then press the pound key.
To clear the long-distance trunk access dial string, press star-zero.
To enter special dialing codes, press the star key followed by the desired code letter. For example, pressing star-P will enter a non-monitored pause into the dial string. Similarly, you may press star-star or star-pound to enter the star or pound keys into the string.
To exit this feature, press only the pound key.

767. The First message notification call Type is INTERNAL.
To change it to LOCAL, press L O.
To change it to LONG-DISTANCE, press L D.
To leave the call type unchanged, press the star key.
To exit this feature, press the pound key.

Voice Prompts (cont'd)

768. The First message notification call Type is LOCAL.
To change it to INTERNAL, press I N.
To change it to LONG-DISTANCE, press L D.
To leave the call type unchanged, press the star key.
To exit this feature, press the pound key.

769. The First message notification call type is LONG-DISTANCE.
To change it to INTERNAL, press I N.
To change it to LOCAL, press L O.
To leave the call type unchanged, press the star key.
To exit this feature, press the pound key.

770. The Second message notification call Type is INTERNAL.
To change it to LOCAL, press L O.
To change it to LONG-DISTANCE, press L D.
To leave the call type unchanged, press the star key.
To exit this feature, press the pound key.

771. The Second message notification call Type is LOCAL.
To change it to INTERNAL, press I N.
To change it to LONG-DISTANCE, press L D.
To leave the call type unchanged, press the star key.
To exit this feature, press the pound key.

772. The Second message notification call type is LONG-DISTANCE.
To change it to INTERNAL, press I N.
To change it to LOCAL, press L O.
To leave the call type unchanged, press the star key.
To exit this feature, press the pound key.

773. The Third message notification call Type is INTERNAL.
To change it to LOCAL, press L O.
To change it to LONG-DISTANCE, press L D.
To leave the call type unchanged, press the star key.
To exit this feature, press the pound key.

774. The Third message notification call Type is LOCAL.
To change it to INTERNAL, press I N.
To change it to LONG-DISTANCE, press L D.
To leave the call type unchanged, press the star key.
To exit this feature, press the pound key.

775. The Third message notification call type is LONG-DISTANCE.
To change it to INTERNAL, press I N.
To change it to LOCAL, press L O.
To leave the call type unchanged, press the star key.
To exit this feature, press the pound key.

Voice Prompts (cont'd)

776. Please select from the following list of messaging mailbox options.
To specify the Default Message Playback Direction, press P D.
To program Message-Waiting Lamping, press M W.
To program forcing of Unscreened Transfers, press U X.
To program Announced Call Screening, press C S.
To program Blocking of Auto-Attendant calls, press B A.
To specify the Next Call-Routing mailbox, press N C.
To specify the message storage limit, press M L.
To program External Message Notification, press M N.
To Override the Call Type for one or more of the Message Notification Numbers, press O T.
To return to the Mailbox Programming Menu, press the pound key.

777. Please enter the number, one, two or three, of the notification number whose call type you wish to modify.
To go to another mailbox, press the pound key.
To exit this feature, press the pound key twice.

778. Not programmable

779. To return to the Initialization Menu, press only the pound key.

780. The Voice Mail is currently configured for connection to phone system number ____.

781. The Voice Mail is currently configured for connection to phone system type _____.

782. _____ and will optimize data compression to favor message sound quality.

783. _____ and will optimize data compression to favor message storage capacity.

784. Not programmable

785. Not programmable

786. Not programmable

787. Not programmable

788. Not programmable

Voice Prompts (cont'd)

789. Not programmable

790. _____ Use English and go to mailbox _____.

791. _____ Use Spanish and go to mailbox _____.

792. _____ Use French and go to mailbox _____.

793. _____ Use Italian and go to mailbox _____.

794. _____ Use German and go to mailbox _____.

795. _____ Use Russian and go to mailbox _____.

796. _____ Use Portuguese and go to mailbox _____.

797. _____ Use Greek and go to mailbox _____.

798. _____ Use Polish and go to mailbox _____.

799. _____ Use Norwegian and go to mailbox _____.

800. _____ Use Swedish and go to mailbox _____.

801. _____ Use Belgian and go to mailbox _____.

802. _____ Use Dutch and go to mailbox _____.

803. _____ Use Swiss and go to mailbox _____.

804. _____ Use Japanese and go to mailbox _____.

805. _____ Use Mandarin Chinese and go to mailbox _____.

806. _____ Use Thai and go to mailbox _____.

807. _____ Use Korean and go to mailbox _____.

Voice Prompts (cont'd)

808. _____ Use Arabic and go to mailbox _____.

809. Not programmable

810. Not programmable

811. Not programmable

812. Not programmable

813. Not programmable

814. Not programmable

815. Not programmable

816. Please select from the following list of Dial Action programming options.
To hear the parameters currently specified for the selected Table, press H P.
To specify a key which will transfer the caller to a predefined mailbox, press M G.
To specify a key which will transfer the caller to a mailbox which they dial, press C G.
To specify a key which will transfer the caller to a predefined extension, press E T.
To specify a key which will transfer the caller to an extension which they dial, press C T.
To specify a key which will allow the caller to record a message in a predefined mailbox, press M R.
To assign a key which selects the Primary Language and transfers the caller to a predefined mailbox, press P L.
To assign a key which selects the Alternate Language and transfers the caller to a predefined mailbox, press A L.
To un-define the dial-action assignment of a key, press U K.
To restore the Default dial-actions for the selected Table, press R D.
To exit this feature, press the pound key twice.

817. Not programmable

818. Not programmable

NITSUKO AMERICA
TELECOM DIVISION

NVM-202
Voice Mail
with Automated Attendant

Release Notes for Versions 3.0

91

Part 1: New and Changed Features

Voice Mail Networking 95
Caller ID 95
Full Screen Editor 95
Installation Options 95
Number of Extensions and Trunks 95
Install Menu 95
System Options 96
Message backup/go-ahead time 96
Immediate Self Test of Ports (s) 96
Port Self Test timer 96
Lamp On string 96
Lamp Off string 97
Port Options 98
Self Test 98
Clear port's failure 98
Mailbox Options
Alternate Next CRMB dial option 98
Auto Forwarding 100
Notification Options 100
Digital pager callback number 100
Key Actions in Dial Action Table 100
Logging on to a Mailbox 100
Record a Message (With/Without a Greeting) 100
User Features 101
Enhanced Reply, Record and Send, and Message Forwarding Features 101
Auto Time-Stamp 101
Auto Help 101
Auto Forward 101
Multiple Mailbox Greetings 102
Recording Options for Automated Attendant Callers 102
Voice Prompts 103

Part 2: More About Using Full Screen Editor

Introduction 107
About Part 2 107
Getting the Main Menu for the Full Screen Editor 107
Getting Help 108
Using a Menu 109
Using the System Password 109
Moving Around the Screens and Database Options 109
The NVM-202 Menu Tree for the Full Screen Editor 112
Using the Exit Command on the Main Menu 113
Shutting Down NVM-202 113
Switching Between the Full Screen Editor and Line Editor 113
Exiting NVM-202 113
Installing NVM-202 113
Selecting Mailbox Options, Port Options, Answering Schedule Tables, and Dial Action Tables 114
More About Mailbox Options 115
Using Distribution Lists 117
Using Reports 118

Voice Mail Networking

The Voice Mail capability of NVM-202 has been expanded to include Voice Mail Networking. The Voice Mail Networking Option lets NVM-202 mailbox users exchange messages with mailbox users at any other Voice Mail System that allows AMIS Networking. This means that an NVM-202 mailbox user can:

- Call their NVM-202 mailbox and record a message for someone at a remote AMIS-compatible Voice Mail System. NVM-202 collects all the recorded "network messages" and sends them to the other Voice Mail Systems at the pre-programmed time (s).
- Receive messages from other AMIS-compatible Voice Mail Systems. While listening to a Network message, an NVM-202 mailbox user can:
  - Record a reply, which will automatically be delivered to the message sender at the other Voice Mail System
  - Make an immediate call to the message sender at the other Voice Mail System without first exiting their mailbox
  - Forward the message to another mailbox

For detailed info on Voice Mail Networking, see the Voice Mail Networking Guide (P/N 17570VMN01).

Caller ID

NVM can now identify the trunk that an outside caller uses to leave a message. This enhances the message listening options as follows:

- The message recipient can now press TI and hear the outside telephone number of the message sender.
- The message recipient can press MC to make an immediate call to the message sender's telephone number as long as that number is a "dialable number." A dialable number is a number that includes all the digits that must be dialed to reach the message sender, including a "1" and area code if applicable. The Central Office handling the call determines what type of caller ID digits are sent.

Caller ID is available only on ONYX VS and ONYX IV systems that have been System Software Version 3.0 or higher.

Full Screen Editor

NVM-202 now has a Full Screen Editor in addition to the existing Line Editor. The Full Screen Editor provides a screen-full (page) of data at a time. The Full Screen Editor includes pull-down menus, pop-up dialog boxes, and detailed Help screens. If you use an RS-232C terminal to program NVM-202, you will be able to use the Line Editor only. If you use a monitor instead, you will be able to use the Line Editor or the Full Screen Editor. For details on using the Full Screen Editor, see Part II of this guide.

Installation Options

➤ Number of Extensions and Trunks

The installation procedure now lets you enter the number of extensions and trunks in the phone system. NVM-202 will create an equal number of Subscriber and Trunk Mailboxes, respectively.

➤ Install Menu

The new Install Menu does not include the ALLIANCE phone systems.

System Options

➤ Message backup/go-ahead time

This option determines how many seconds NVM-202 backs up a message when a user presses B or fast forwards a message when a user presses G.

DEFAULT: 5 seconds
ENTRIES: 1-60 seconds

NOTES: N/A

➤ Immediate Self Test of Port (s)

This option activates an immediate Port Self Test. The test consists of two-parts: (1) NVM-202 takes the port off hook and listens for dial tone. If no dial tone exists, this constitutes a failure. If dial tone exists, (2) NVM-202 dials a digit on the port to see if the digit breaks dial tone. If dial tone does not get broken, this constitutes a failure. The Port Activity screen (*Call State* field) shows the word "Testing" during the test and "Failed" if the port fails the test.

DEFAULT: N
ENTRIES: N - No
Y - Yes

NOTES: NVM-202 will not use a failed port until you clear the port's failure. To clear a port's failure, use *Port Options* on *Customize Menu*. See also page 98.

Program the *Port Option* called *Extension*. NVM-202 dials the 1st digit of the port's extension to perform the second part of the Port Self Test.

NVM-202 can also automatically test the ports at regular intervals. See also *Port Self Test timer* (below) and page 98.

➤ Port Self Test timer

This is how often NVM-202 automatically tests a port.

DEFAULT: 15
ENTRIES: 0-9999 min (0 = Test disabled)

NOTES: To activate an automatic Port Self Test, use *Port Options* on the *Customize Menu* (see page 98.)

This *Port Self Test timer* does not apply to *Immediate Self Test of Port (s)* (above).

➤ Lamp On string

This is the string that turns on the Message Lamp at an extension. Enter the string that the phone system uses. The string must include an "X" (see below).

DEFAULT: #XG
ENTRIES: N - None
Up to 20 digits including the codes below:

System Options (cont'd)

➤ Lamp On string (cont'd)

ENTRIES:
- F - Flash
- W - Wait for dial tone
- S - Wait for any type of sound
- P - Pause (NVM-202 pauses 2 sec, dial next digit)
- M - Monitored Pause (NVM-202 pauses 2 sec, dials next digit only if no busy/reorder tone. Otherwise, NVM-202 terminates the call.)
- A - Analyzed Pause (Same as Monitored Pause except duration of pause is 4 sec)
- X - NVM-202 replaces the "X" with an extension number. This way NVM-202 knows which extension should have its lamp turned on. A "Lamp On string" must include an "X."
- G - Number of Messages in a Mailbox (This number appears on Display Phones that can show the number of messages in the mailbox).

NOTES: To set the Flash time (if you must enter one in the string), use *Customize Menu, System Options*.

To enable *Lamp callouts* for a port, use the *Customize Menu, Port Options*.

To enable the Message Lamps for a mailbox, use *Customize Menu, Mailbox Options*.

➤ Lamp Off string

This string turns off the Message Lamp at an extension. Enter the string that the phone system uses. The string must include an "X."

DEFAULT: #X00

ENTRIES: N - None

Up to 20 digits including the codes below:
- F - Flash
- W - Wait for dial tone
- S - Wait for any type of sound
- P - Pause (NVM-202 pauses 2 sec, dial next digit)
- M - Monitored pause (NVM-202 pauses 2 sec, dials next digit only if no busy/reorder tone. Otherwise, NVM-202 terminates the call.)
- A - Analyzed pause (NVM-202 pauses 4 sec, dials next digit only if no busy/reorder tone. If busy/reorder tone, NVM-202 terminates call.)
- X - NVM-202 replaces the "X" with an extension number. This way NVM-202 knows which extension should have its lamp turned off. A "Lamp Off string" must include an "X."

NOTES: To set the Flash time (if you must enter one in the string), use *Customize Menu, System Options*.

To enable *Lamp callouts* for a port, use the *Customize Menu, Port Options*.

To enable the Message Lamps for a mailbox, use *Customize Menu, Mailbox Options*.

In Port Options

➤ Self Test

This option activates or prevents a Port Self Test. If activated, NVM-202 will test the port at regular intervals. The test consists of two-parts: (1) NVM-202 takes the port off hook and listens for dial tone. If no dial tone exists, this constitutes a failure. If dial tone exists, (2) NVM-202 dials a digit on a port to see if the digit breaks dial tone. If dial tone does not get broken, this constitutes a failure.

The Port Activity screen (*Call State* field) shows the word "Testing" during the test and "Failed" if the port fails the test. The Voice Mail System will not use a failed port until you clear the port's failure.

DEFAULT: N
ENTRIES: N - No
Y - Yes

NOTES: To clear a port's failure, see the option below.

To set test intervals, use *System Option, Port Self Test timer* (page 96).

To have NVM-202 test the port right away and only once, use *System Option, Immediate Self Test of Ports* (page 96).

Make sure the *Port Option* called *Extension* has been programmed. NVM-202 dials the 1st digit of that extension to perform the 2nd part of the Port Self Test.

➤ Clear Port's failure

This option clears a failure condition generated by a Port Self Test.

DEFAULT: N
ENTRIES: N - No
Y - Yes

NOTES: NVM-202 will not use failed ports. Clear the failure.

To activate automatic and regular Port Self Tests, see the option *Self Test* above. To activate a single Port Self Test, see page 96.

Mailbox Options

➤ Alternate Next CRMB dial option

(For Subscriber, Network, Message Center Mailboxes)

This option has been enhanced to provide additional routing options to callers who enter a Subscriber or Network Mailbox to leave a message. There are now 3 entries instead of 2:

- Option 1 (which used to be the "Yes" entry) lets a caller use the routing options assigned to Keys 0-9 of the Next Call Routing Mailbox's Dial Action Table. When the caller enters the mailbox, NVM-202 plays the Subscriber's/Network's Mailbox Greeting (and possibly a pre-recorded voice prompt) or the Message Center's Welcome Message, then a beep. The beep signifies that NVM-202 is in record mode. The caller can then record a message and/or select one of the routing options.

Mailbox Options (cont'd)

➤ Alternate Next CRMB dial option (cont'd)

- Option 2 (which is new) lets a caller use the routing options assigned to Keys 0-9, *, #, and the TIMEOUT function of the Next Call Routing Mailbox's Dial Action Table. When the caller enters the mailbox, NVM-202 plays the Mailbox Greeting, which must be recorded, and possibly a pre-recorded voice prompt like ***Start recording at the tone. When you are done, press the pound key or hang up*** (it depends on how the caller entered the mailbox). Then there is silence, which means that NVM-202 is waiting for the caller to dial a digit (that is, select one of the routing options).
- "None" (which used to be the "No" entry) lets the caller use the Key 0 Action of the Next Call Routing Mailbox's Dial Action Table. When the caller enters the mailbox, NVM-202 plays the Subscriber's/Network's Mailbox Greeting (and possibly a pre-recorded voice prompt) or the Message Center's Welcome Message, then a beep. The beep signifies that NVM-202 is in record mode. The caller can then record a message and/or dial 0.

DEFAULT: None

ENTRIES: N - None
1 - Option 1
2 - Option 2

NOTES: Make sure the Subscriber, Network, or Message Center Mailbox has a Next Call Routing Mailbox.

The Subscriber Mailbox Greeting or Message Center's Welcome Message must explain the routing options in the Next Call Routing Mailbox's Dial Action Table. Moreover, the Mailbox Greeting **must** be recorded in order for Option 2 to work as described above. Otherwise, Option 2 will work like Option 1 instead.

Option 2 does not apply to Message Center Mailboxes.

If Option 2 is selected and you want the caller to be able to press a key to record a message, assign the REC2 Action to that key in the Dial Action Table. The REC2 Action says ***Recording*** followed by a beep, then lets a caller record a message. (REC1 plays the greeting and a beep. There is no need to use REC1 since the caller has already heard the Mailbox Greeting or Welcome Message.)

If Option 2 is selected and a caller presses an *Undefined Routing* key, NVM-202 sends the caller to the Welcome Message and Instruction Menu for the Next Call Routing Mailbox. For this reason, you may wish to record the dialing options in the Instruction Menu. Or, see below.

If Option 2 is selected and some keys will have no assigned Action, you can assign REC1 nnn to a key, where nnn is the Subscriber, Network, or Message Center Mailbox number. This sends the caller back to the Mailbox Greeting or Welcome Message.

Mailbox Options (cont'd)

➤ Auto Forwarding

(For Subscriber, Guest, Message Center, Network Mailboxes)
This option determines how the Auto Forwarding option works for the above-mentioned mailboxes. Generally speaking, the Auto Forwarding option copies the messages in the mailbox to another (partner) mailbox.

DEFAULT: S
ENTRIES: S - Fwd Save (Saves message in initiator's mailbox after copying it to the partner)
E - Fwd Erase (Erases message in initiator's mailbox after copying it to the partner)
N - None (Auto Forwarding not allowed)

NOTES: N/A

Notification Options

➤ Digital pager callback number

You can now enter an "X" and/or "M" in the *Digital pager callback number* field. If you enter an X, the pager's display will show the mailbox number that generated the Msg Notification call. If you enter an M, the display shows the number of messages in that mailbox.

Key Actions in Dial Action Table

➤ Logging on to a Mailbox

The LOGON Action can now let a caller:

- Log on to a specific mailbox by pressing one key
- Log on to any mailbox by dialing its mailbox number

DEFAULT: LOGON N assigned to Key #
ENTRIES: LOGON in *Key Action* field

NOTES: To let a caller press the LOGON key to log on to a specific mailbox, enter the desired mailbox number in the *Key Number* field.

To let a caller dial mailbox numbers to log on to mailboxes, enter XXX in the *Key Number* field. For example, to let callers log on to mailboxes that begin with 7, enter LOGON XXX for the *Key 7 Number* field.

➤ Record a Message (With/Without a Greeting)

There are now two types of recording Actions for the keys in the Dial Action Table.

DEFAULT: REC1 for the star (*) key
ENTRIES: REC1 - Plays the Mailbox Greeting, a beep, then goes into record mode.
REC2 - Plays voice prompt ***Recording***, a beep, then goes into record mode. The REC2 option is typically used when Option 2 is selected for the *Alternate Next CRMB dial option* (page (?)).

NOTES: If you select REC1 IXXX (Quick Message), you can still enable/disable the Mailbox Greeting by using *Customize Menu, System Options (Greeting for qck msg/mailbox transfer)*. If you disable the Mailbox Greeting, NVM-202 plays ***At the tone you can leave a message.***

User Features

➤ Enhanced Reply, Record and Send, and Message Forwarding Features

NVM-202 now confirms that a reply has been sent and a message has been forwarded. NVM-202 also confirms who the message recipients will be when someone records a message using the RS method. More specifically:

- When a person finishes using the RE method to record a reply, NVM-202 says, ***The reply has been sent.***
- When a person finishes using the MF method to forward a message, NVM-202 says, ***The message has been forwarded.***
- When a person uses the RS method to record a message, NVM-202 now confirms the message recipients before sending the message. NVM-202 says ***John Smith (or mailbox XXX) will receive this message*** right after a recipient's mailbox number is entered.

➤ Auto Time-Stamp

(For Subscriber, Guest, Message Center, Network Mailboxes)

After playing a message, NVM-202 can automatically play the following:

- Time and date that the message was left
- Name or number of the message sender

If Auto Time-Stamp is off, you must press T I during or after a message to get this information.

To use Auto Time-Stamp:

1. Call your mailbox.
2. Press O P for Mailbox Options.
3. Press A T for Auto Time-Stamp.
4. Follow the voice prompts.

➤ Auto Help

(For Subscriber, Guest, Message Center, Network Mailboxes)

Auto Help has new a new access code.

To use Auto Help:

1. Call your mailbox.
2. Press O P for Mailbox Options.
3. Press A H for Auto Help.
4. Follow instructions on screen.

➤ Auto Forward

(For Subscriber, Guest, Message Center, Network Mailboxes)

With Auto Forward, NVM-202 can automatically copy each of your messages to another person's mailbox -- your "partner mailbox." This way, if you are on vacation, your partner can immediately respond to any messages you receive. You will not have to ask them to check your mailbox.

By default, NVM-202 will leave each message in your mailbox after copying it to your partner mailbox. NVM-202 can, however, be programmed to erase your messages after copying them.

User Features (cont'd)

➤ Auto Forward (cont'd)

NVM-202 will Auto Forward a message only once unless your partner mailbox is a Distribution Mailbox, which represents a list of mailboxes. In this case, NVM-202 copies the message to each mailbox on the list, and then to their Auto Forward partners, if any.

If your mailbox is full when a message comes in, NVM-202 will not be able to put the message in your mailbox but will be able to copy the message to your partner mailbox.

If your mailbox and your partner mailbox are full when a message comes in, NVM-202 will not be able to accept the message at all.

To use Auto Forward:

1. Call your mailbox.
2. Press O P for Mailbox Options.
3. Press A F for Auto Forward.
4. Follow voice prompts.

➤ Multiple Mailbox Greetings

You can record up to three different Mailbox Greetings to let callers know your whereabouts before they leave a message. NVM-202 plays the greeting that you select as "active."

To access Mailbox Greeting:

1. Call your mailbox.
2. Press G for Mailbox Greeting.
3. Follow voice prompts.

➤ Recording Options For Automated Attendant Callers

While recording a message, an Automated Attendant caller can press * to pause recording, then press 0 to hear the recording options.

Voice Prompts

In NVM-202 Version 3.0, a whole block of prompts have been renumbered and some prompts have been added and/or changed. More specifically:

- Prompts 600-816 have been renumbered as 700-916. To get a complete list of the NVM-202 voice prompts, see the NVM-202 Release Notes for Version 2.02 and 2.00.02, P/N 17570UPG04.

  For example: If you are using NVM-202 Release 3.0 and you want to access prompt 600 (as listed in P/N 17570UPG04), you enter 700, not 600.
- The prompts that have been added or changed are listed below.

28. Recording has been paused due to silence.
To continue recording, press the star key.
For a complete list of recording options, press zero.

29. Recording has been paused due to silence.
To continue recording, press the star key.
For a complete list of recording options, press zero.

60. To accept this call, press 1. Otherwise, press the pound key, then hang up.

62. This network message arrived on _____.

63. _____through this network telephone number:_____

64. _____through an unidentified network telephone number.

89. I'm sorry.
This is a computer generated call.
Please press "1" now to end this call.

90. Thank you.
We apologize for any inconvenience that this call may have caused you. You will not be called again.

121. To listen to your Active Greeting, press L.
To turn your greeting off or on, press O.
To record a new greeting, press R.
To activate a different greeting, press A.
To exit this feature, press the pound key.

122. The Active Greeting has not been recorded.
To record the greeting, press R.
To activate a different greeting, press A.
To exit this feature, press the pound key.

Voice Prompts (cont'd)

124. These are the options you have while listening to a recording:
To backup, then continue listening, press B.
To backup to the beginning and listen, press B B.
To go forward, then continue listening, press G.
To pause while listening, press the star key.
To continue listening after a pause, press the star key.
To turn the volume up, press V U.
To turn the volume down, press V D.
To restore the volume to normal, press V N.
To exit the listen mode, press the pound key.

125. These are the options you have while making a recording:
To backup, then continue listening to the recording, press B.
To backup to the beginning and listen to the recording, press B B.
To pause while recording, press the star key.
To continue recording after a pause, press the star key.
To erase the recording, press E.
To end recording, press the pound key.

149. That number is restricted.

154. Welcome to the Mailbox Options Menu.
To change your security code, press S.
To change message notification, press N.
To change the Auto Help option, press A H.
To change the Auto Forward option, press A F.
To change the Auto Time-Stamp option, press A T.
To exit this menu, press the pound key.

162. The following network message was returned to you because _____.

169. _____ it was too long

170. _____ the destination mailbox could not be found.

171. _____ the destination mailbox did not accept the message.

188. These are the options you have while listening to a message:
To record a reply, press R E.
To have the message forwarded, press M F.
To make a call to the sender of the message, press M C.
To exit the listen mode, press the pound key.
To hear the time, date, and sender of the message, press T I.
To save the message, press S A.
To erase the message, press E.
To listen to messages in reverse order, press R L.
To listen to the next message, press L.
To backup, then continue listening, press B.
To backup to the beginning and listen, press B B.
To go forward, then continue listening, press G.

Voice Prompts (cont'd)

To pause while listening, press the star key.
To continue listening after a pause, press the star key.
To select the list of new messages, press 1 N.
To select the list of saved messages, press 1 S.
To select the list of held messages, press 1 H.
To select the list of all messages, press 1 A.
To turn the volume up, press V U.
To turn the volume down, press V D.
To restore the volume to normal, press V N.
To exit your mailbox, press X.

189. These are the options you have while recording a message:

To backup, then continue listening to the recording, press B.
To backup to the beginning and listen to the recording, press B B.
To pause while recording, press the star key.
To continue recording after a pause, press the star key.
To erase the message you recorded, press E.
To hear the time and date of the recording, press T I.
To end recording, press the pound key.
To exit your mailbox, press X.

196. This network message was returned on _____.

271. The greeting that is currently active is number_____.

272. Please enter the number (1, 2, or 3) of the greeting which is to be active.
Or, to exit, press the pound key.

326. Welcome to the Mailbox Options Menu.
To change your security code, press S.
To change message notification, press N.
To change the Auto Help option, press A H.
To change the Auto Forward option, press A F.
To change the Auto Time-Stamp option, press A T.
To change the Call Waiting option, press C W.
To change the Call Announcing option, press C A.
To exit this menu, press the pound key.

365. Please enter the network mailbox number, then press the pound key.
Or, to select a different recipient, press the star key.

366. The network mailbox you entered is _____.

Voice Prompts (cont'd)

367. If the mailbox number is correct, press C.
If it is incorrect, press I to re-enter the number.
To select a different recipient, press the star key.

368. The network destination to receive your reply is not known.

406. _____ because it could not be sent to _____.

437. You have entered too many digits.

538. _____ the destination mailbox was full.

539. _____ the network call could not be completed.

600. Auto Time-Stamp is on.
To turn Auto Time-Stamp off, press 0.
To exit this feature, press the pound key.

601. Auto Time-Stamp is off.
To turn Auto Time-Stamp on, press O.
To exit this feature, press the pound key.

602. Auto-Forward is off.
To turn Auto Forward on, press O.
To exit this feature, press the pound key.

603. Auto Forward is on.

604. The Auto Forward recipient is mailbox number _____.

605. To turn Auto Forward off, press 0.
To change the Auto-Forward mailbox, press C.
To exit this feature, press the pound key.

606. Please enter the number of the mailbox to receive the Auto Forward messages.
Or, to exit, press the pound key.

Introduction

NVM-202 now has a Full Screen Editor in addition to a Line Editor.

- The Full Screen Editor provides a screen-full (page) of data at a time. This editor includes pull-down menus, pop-up dialog boxes, and detailed Help screens for the database options as well as for the menus.
- The Line Editor, as you know, shows one line of data at a time and provides Help screens at a menu prompt.

If you use an RS-232C terminal to program NVM-202, you will be able to use the Line Editor only. If you use a VGA monitor to customize NVM-202, you will be able to use the Line Editor or the Full Screen Editor.

About Part 2

Part 2 first explains the Full Screen Editor in general, then follows with explanations on using Mailbox Options, Distribution List and Reports. Detailed explanations are provided for these database options because they are handled quite differently in the Full Screen Editor as opposed to the Line Editor and the current NVM-202 Manual only includes instructions for using the Line Editor. On the other hand, the NVM-202 Manual should suffice for using all other database options.

Note: You will notice that some of the menu names in the Full Screen Editor do not match the menu items listed in the NVM-202 Programming Guide. The differences are not outlined here because it is easy to make the connection between the names in NVM-202 Programming Guide and the names in the Full Screen Editor.

To see the correlation between the NVM-202 documentation and the items on the Main Menu of the Full Screen Editor, see *Getting the Main Menu for the Full Screen Editor* on the next page.

Getting the Main Menu for the Full Screen Editor

To get the Main Menu for the Full Screen Editor, make sure that a VGA monitor is connected to the NVM-202 cabinet. Then turn on NVM-202 system power. You will see the Main Menu (shown on the next page). See also the menu tree on page 112.

From the Full Screen Editor's Main Menu you can access the Main Menu for the Line Editor, if desired. For instructions on accessing the Line Editor, see *Using the Exit Command* on page 113.

Getting the Main Menu for the Full Screen Editor (cont'd)

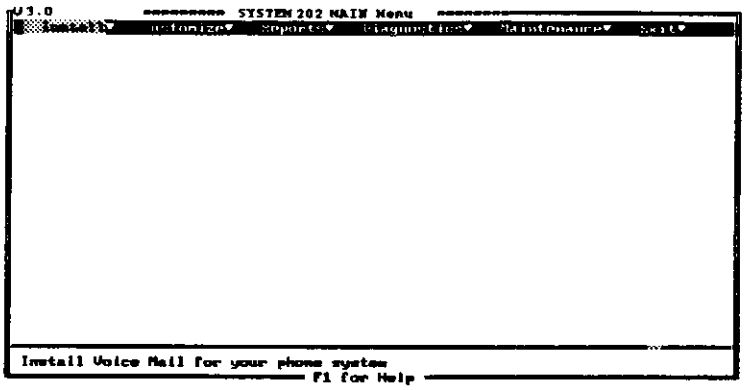

The correlation between the items on the Full Screen Editor's Main Menu and the NVM Installation and Terminal Programming Guide:

Install	Chapter 2 See also page 113 in these Release Notes.
Customize	Chapters 5-8. See also *More About Mailbox Options* (page 115) and *Using Distribution Lists* (page 117) in these Release Notes.
Reports	Chapter 9. See also page 118 in these Release Notes.
Diagnostics	Chapter 10
Maintenance	Chapter 10
Exit	See *Using the Exit Command* on page 113.

Getting Help

The NVM-202 Full Screen Editor provides extensive Help screens. The Help screens explain the menus, the database options, and how to use the keyboard to move around the screens.

To:	Press:
Get Help	F1 (If NVM-202 asks you to confirm, press H)
Exit Help	ESC

The NVM-202 Full Screen Editor also displays an abbreviated line of help at the bottom of the screen for each menu item. To get this one line of help, simply use the arrow keys to highlight the desired menu item.

Using a Menu

The chart below shows you how to use the menus in the Full Screen Editor.

To:	Do this:
Select a menu item on any menu except Reports	Use arrow keys to highlight the menu item, press ENTER OR Press the highlighted letter in the item's name, press ENTER
Exit any menu except the MAIN Menu	Press Esc
Exit MAIN Menu	Use Exit command (page 113)

For instructions on using the *Reports Menu*, see page 118.

Using the System Password

When you select *Install*, *Customize*, *Maintenance*, or *Diagnostics* on the Main Menu, NVM-202 may ask you to enter a password. The default password is CTL. To change the password, use the *Customize Menu, System Options*.

Moving Around the Screens and Database Options

NVM-202 shows the database options in two windows: a large window at the top of the screen and small one at the bottom (see below).

- The large window lists each option with its current value.
- The small window, titled *Entry Code (s) for Highlighted Option*, shows the current value for the highlighted option **and** all the possible entries you can make for the option.

The chart on the next page shows you how to move around the NVM-202 screens, windows, and database options. If desired, you can zoom the window so the small window disappears.

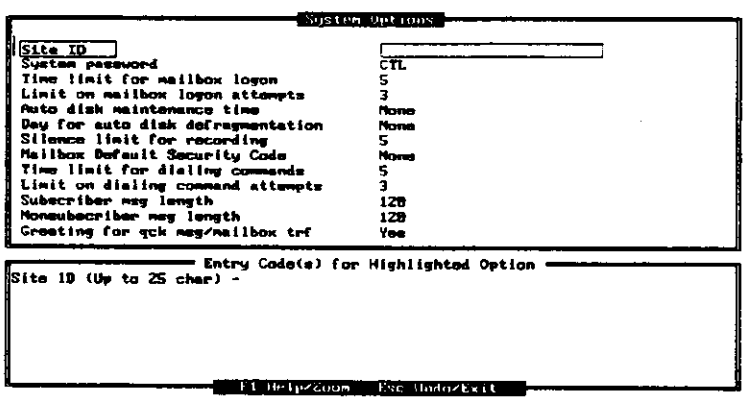

Moving Around the Screens and Database Options (cont'd)

The instructions below apply to most NVM-202 screens. To get specific instructions for the screen you are using, simply press F1 for Help.

To:	Press:
Go to next/previous line	DOWN ARROW, UP ARROW (On some screens, the TAB or ENTER key moves the highlight to the next line and SHIFT-TAB moves the highlight to the previous line.)
Go to next/previous page	PGDN/PGUP
Delete character	DEL or BACKSPACE
Move cursor left/right in string	CTRL-LEFT ARROW CTRL-RIGHT ARROW
Move cursor to end/begin of string	END/HOME
Enter data	Data codes
Activate/cancel insert mode for data entry	INSERT
Undo a data entry (Only works if data code appears in *Entry Code (s) for Highlighted Option* window)	ESC, then U
Exit	ESC, then E
Zoom (enlarge) or Unzoom window (This makes the lower window, titled *Entry Code (s) For Highlighted Option*, disappear or reappear).	F1, press Z
Select mailbox, table, list, or port numbers (when F key assignments are shown at bottom of screen)	F4

Moving Around the Screens and Database Options (cont'd)

To:	Press:
Go to the previous mailbox, list, table, or port (when F key assignments are shown at the bottom of the screen)	F5
Go to the next mailbox, list, table, port (when F key assignments are shown at the bottom of the screen)	F6
Clear a list or table (when F key assignments are shown at bottom of screen)	F3
Mark data for duplication (This applies to the following types of data: • Ports • Mailboxes • Answering Schedule Tables • Dial Action Tables)	F7
Duplicate marked data (see above) to other: • Ports • Mailboxes • Answering Schedule Tables • Dial Action Tables	F8, then the select ports, mailboxes, ASTs or DATs to receive data, then ENTER. When duplicating data to mailboxes, you can receive additional help when NVM-202 displays the Mailbox Selection screen. Simply press F1.

The NVM-202 Menu Tree for the Full Screen Editor

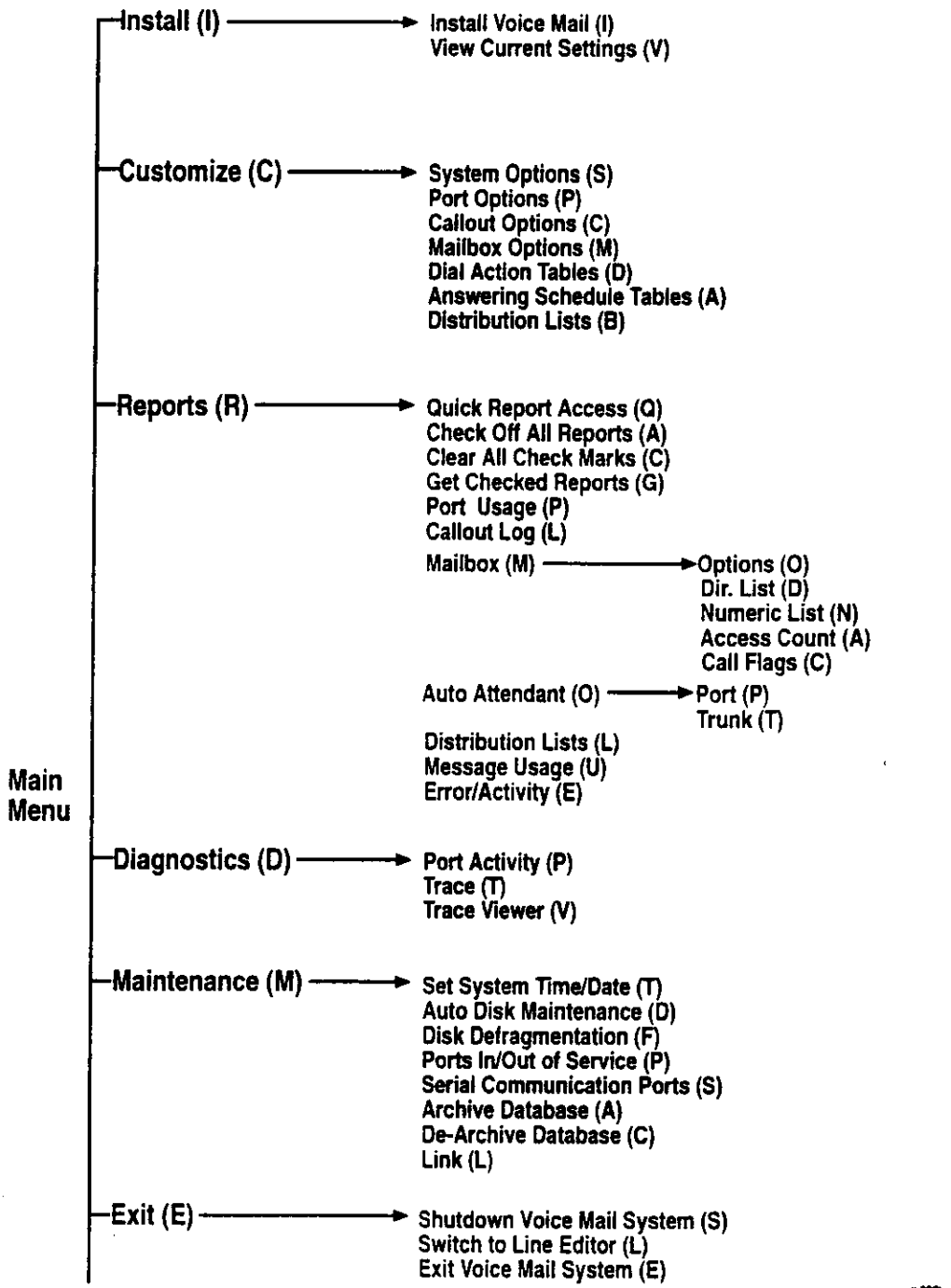

Using the Exit Command on the Main Menu

The *Exit* Command on the Main Menu lets you shutdown NVM-202, switch to the Line Editor, or exit NVM-202 altogether and go to DOS.

➤ Shutting Down NVM-202

Before you turn off NVM-202 power, you must shut down the system. If you do not, the NVM-202 database may become corrupted.

To shut down NVM-202 from the Main Menu:

1. Select *Exit*.
2. Select *Shutdown Voice Mail System*.
3. Follow the instructions on the screen.

➤ Switching Between the Full Screen Editor and Line Editor

To switch between the Full Screen Editor and the Line Editor:

1. At the Main Menu for the Full Screen Editor: Select *Exit*.
2. Select *Switch to Line Editor*. You see the MAIN MENU prompt.
3. Press H, ENTER to see the MAIN Menu or the Line Editor.
4. To switch back to the Full Screen Editor from the Main Menu of the Line Editor: Press FSE, ENTER.

➤ Exiting NVM-202

You can exit NVM-202 from the Main Menu and go to the PC operating system. You will, however, need a special password. This password is different than the system password. To get the password for exiting, call the technical support staff at NTK.

To exit NVM-202 from the Main Menu:

1. Select *Exit*.
2. Select *Exit Voice Mail System*.
3. Type the password, press ENTER. After a few seconds, you see the DOS prompt, C:\VM.

Installing NVM-202

To install NVM-202 from the Main Menu of the Full Screen Editor:

1. Select *Install*.
2. Type password, if requested, press ENTER. (The default password is CTL. To change it, use *Customize Menu, System Options*.)
3. Select *Install Voice Mail*. You see a list of phone systems.
4. Highlight the desired phone system, press ENTER. You see the screen on the next page.

   To learn how to move around the screen, select items, and enter data, see the screen's border. For more detailed help, press F1.

Installing NVM-202 (cont'd)

4. cont'd

```
Tab-Move down    Shift/Tab-Move up

Installation Options for OMEX VS/DS100
Number of Ports                  4
Default Security Code            None
Default Bilingual Mode           English (1)
  L=Alternate Language
Voice Compression                A
  A=32kbits/sec
  B=24kbits/sec
Number of Extensions             48
Extension numbers start at       300
Number of Trunks                 16
Trunk numbers start at           348

        Installation Function Buttons

        [Exit] [System] [Ports] [Compress]

Use arrows to highlight button, press Enter to select.
```

The **Exit** button lets you exit this screen.
The **System** button installs everything (including default database).
The **Ports** button installs only the ports.
The **Compress** button installs only the Voice Compression Rate.
(You will be able to access the **Ports** or **Compress** buttons only if NVM-202 has been installed for a phone system.)

To view the current installation settings from the Main Menu:

1. Select *Install*.
2. Select *View Current Settings*. NVM-202 displays the settings.
3. When done, press any key.

Selecting Mailbox Options, Port Options, Answering Schedule Tables, and Dial Action Tables

When you select Port Options, Mailbox Options, Answering Schedule Tables, or Dial Action Tables, you will see a *Selection* Screen before you see the actual database options. This screen lets you select the numerical range of ports, mailboxes, ASTs, DATs that should be shown on the screen. For example: In the case of Port Options, you will see the *Port Selection* screen. Enter the first port you wish to view in the *Starting Port* field and the last port you wish to view in the *Ending Port* field, then press ENTER. Or, press only ENTER to view all ports. The *Mailbox Selection* screen has more than the *Starting* and *Ending* fields. For instructions on using this screen, see *More About Mailbox Options* below.

Once you select the range, you will see the database options and the F key assignments, which are shown at the bottom of the screen. For information on the F keys assignments, see page 110.

More About Mailbox Options

The way you access, create, and delete mailboxes in the Full Screen Editor is quite different than the way you do it in the Line Editor. See the instructions below.

To create a mailbox from scratch or to access existing mailboxes from the Main Menu:

1. Find out which mailbox numbers are already used. To do this, use the *Reports Menu, Mailbox Numeric List.*
2. Select *Customize* on the Main Menu.
3. Type password, if system asks for it, press ENTER.
   Default password is CTL. To change it, use *System Options.*
4. Select *Mailbox Options.* You see:

```
Tab-Move clockwise around screen   Shift/Tab-Move counterclockwise
Mailbox Selection          Mailbox Types
Starting Mailbox    811    [X] Undefined        [X] Future Delivery
Ending Mailbox      760    [X] Subscriber       [X] Dir. Dialing
                           [X] Message Center   [X] Trunk
                           [X] Announcement     [X] Modem
Exit    OK                 [X] ACD Announce     [X] Network
                           [X] Call Routing
                           [X] Guest
                           [X] Distribution
Use arrows to highlight button, press Enter to select.
```

   To learn how to move around the screen, select items, and enter data, see the screen's border. For more detailed help, press F1.

5. Press TAB to move to the *Mailbox Selection* fields.
   Use the *Starting Mailbox* and *Ending Mailbox* fields to enter the range of mailbox numbers you wish to create and/or access. To create/access only one mailbox, enter the same number in the *Starting Mailbox* and *Ending Mailbox* fields.
6. Press TAB key to move to the *Mailbox Types.* Make sure that the types you wish to create/access are marked with an "X." To add or remove an "X," press ENTER. To create mailboxes from scratch, make sure *Undefined* is marked.
7. Press TAB to move to the buttons. Use the arrow keys to highlight OK, press ENTER. This accesses the 1st mailbox in the range.
8. If a mailbox does not yet exist, you see:
   Undefined. Do you want to create this mailbox ?
   Press Y, then press ENTER. You will see the *Type* field. Press the code for the type of mailbox you want to create, then press ENTER. Now you can customize the options for that type of mailbox.
9. Press F6 to go to the next mailbox number. To assign a type to it if one does not exist, return to step 8. To skip it, press F6 again to go to the next mailbox, and so on.
   OR
   Go to next procedure to create a range of mailboxes all of the same type (e.g., Call Routing Mailboxes 100 -120).

More About Mailbox Options (cont'd)

To create a range of type "X" mailboxes (e.g., Call Routing Mailboxes 100 -120):

1. Find out which mailbox numbers are not being used. To do this, select *Reports Menu, Mailbox Numeric List*. The steps below let you change the unused mailboxes into the type you want.
2. Access or create a type "X" mailbox (see steps 1-8 in the previous procedure). For example, if you want to create a range of Call Routing Mailboxes, access/create a Call Routing Mailbox.
3. Press F7 to mark the data in the *Type* field.
4. Press F8 to duplicate the marked data to the range of unused mailbox numbers. You will see the screen below.

```
Tab-Move clockwise around screen   Shift/Tab-Move counterclockwise
Mailbox Selection                  Mailbox Types
Starting Mailbox    811            [X] Undefined          [X] Future Delivery
Ending Mailbox      768            [X] Subscriber         [X] Dir. Dialing
                                   [X] Message Center     [X] Trunk
                                   [X] Announcement       [X] Modem
Exit    OK                         [X] ACD Announce       [X] Network
                                   [X] Call Routing
                                   [X] Guest
                                   [X] Distribution
Use arrows to highlight button, press Enter to select.
```

To learn how to move around the screen, select items, and enter data, see the screen's border. For more detailed help, press F1.

5. Select the range of unused mailboxes (see steps 5-6 in the previous procedure). In the *Mailbox Types* field, only select *Undefined*.
6. Press TAB to move to the buttons. Use the arrow keys to highlight the OK button, press ENTER. NVM-202 creates the mailboxes.

To delete mailboxes starting from the Main Menu:

1. Select *Customize*.
2. Type password, if the system asks for it, press ENTER. Default password is CTL. To change it, use *System Options*.
3. Select *Mailbox Options*. You see:

```
Tab-Move clockwise around screen   Shift/Tab-Move counterclockwise
Mailbox Selection                  Mailbox Types
Starting Mailbox    811            [X] Undefined          [X] Future Delivery
Ending Mailbox      768            [X] Subscriber         [X] Dir. Dialing
                                   [X] Message Center     [X] Trunk
                                   [X] Announcement       [X] Modem
Exit    OK                         [X] ACD Announce       [X] Network
                                   [X] Call Routing
                                   [X] Guest
                                   [X] Distribution
Use arrows to highlight button, press Enter to select.
```

To learn how to move around the screen, select items, and enter data, see the screen's border. For more detailed help, press F1.

More About Mailbox Options (cont'd)

4. Select the mailboxes to be deleted as follows:
   - Press TAB to move to the *Mailbox Selection* fields. Use the *Starting Mailbox* and *Ending Mailbox* fields to enter a range of mailboxes that includes the mailboxes you wish to delete. To delete only one mailbox, enter the same number in the *Starting Mailbox* and *Ending Mailbox* fields.
   - Press TAB to move to *Mailbox Types*. Make sure the types you wish to delete have an "X." To add or remove an "X", press ENTER.
6. Press TAB to move to the buttons. Use the arrow keys to highlight the OK button, press ENTER. You see the 1st mailbox in the range.
7. In the *Type* field, enter UD for *Undefined*, press ENTER. This deletes the mailbox. If you entered a range of mailboxes, this step deletes the first mailbox in the range.
8. Press F6 to go to the next mailbox. To delete it, return to step 7. To skip it, press F6 again to go to the next mailbox, and so on.
   OR
   Go to next procedure to delete all the mailboxes in the range.

To delete ALL the mailboxes in a specific range:

1. Delete 1st mailbox in range (see steps 1-7 in above procedure).
2. Press F7 to mark *Undefined* in the *Type* field.
3. Press F8 to duplicate the marked data to the range of mailboxes you wish to delete. You will see the screen below.

```
Tab-Move clockwise around screen   Shift/Tab-Move counterclockwise
Mailbox Selection                  Mailbox Types
Starting Mailbox     811           [X] Undefined          [X] Future Delivery
Ending Mailbox       768           [X] Subscriber         [X] Dir. Dialing
                                   [X] Message Center     [X] Trunk
                                   [X] Announcement       [X] Modem
Exit    OK                         [X] ACD Announce       [X] Network
                                   [X] Call Routing
                                   [X] Guest
                                   [X] Distribution
Use arrows to highlight button, press Enter to select.
```

4. Select the range of mailboxes to be deleted (see step 4 in the previous procedure).
5. Press TAB to move to the buttons. Use the arrow keys to highlight the OK button, press ENTER. NVM-202 deletes the mailboxes.

Using Distribution Lists

The way you work with Distribution Lists in the Full Screen Editor is quite different than the way you do it in the Line Editor. See the instructions below.

To access Distribution Lists from the Main Menu:

1. Select *Customize*.
2. Type password, if system asks for it, press ENTER.
   Default password is CTL. To change it, use *System Options*.
3. Select *Distribution Lists*.
4. To add a mailbox, type a mailbox number, press ENTER.
   To delete a mailbox, use the arrow keys to highlight the mailbox number, press N, then ENTER. For information on using the F keys, see page 110.

Using Reports

The way you work with Reports in the Full Screen Editor is quite different than the way you do it in the Line Editor.

To get several reports in succession starting from the Main Menu:

1. If you want to print, make sure a printer is connected to NVM-202.
2. Select *Reports Menu.*
3. Check off the reports you wish to print/list/reset (if a report can be reset, NVM-202 will let you know).

   To check off a report, use the arrow keys to highlight the report or press the highlighted letter in the report's name, then press ENTER. Or, if you want all reports, select *Check Off All Reports*, press ENTER.

4. Select *Get Checked Reports*. Follow the instructions on screen. For details on using the Mailbox Selection screen, see Using Mailbox Options in this section.

To uncheck a report:

- Highlight the checked report, press ENTER. Or, use the *Clear All Check Marks* command to uncheck all checked reports.

To quickly get one report at a time from the Main Menu:

1. If you want to print, make sure a printer is connected to NVM-202.
2. Select *Reports Menu.*
3. Check off *Quick Report Access*. To check it off, highlight it, press ENTER.
4. Highlight the report you wish to print/list/reset, then press ENTER.

NITSUKO AMERICA
TELECOM DIVISION

NVM-2000
Voice Mail
with Automated Attendant

Release Notes for Version 4.0

New and Changed Features

Pre-Installed Voice Prompts in English, French, Spanish 123
Expanded Install Menu 125
Changed COM1 Baud Rate 125
Modified Start Up Mode 125
Voice Prompts 125

Pre-Installed Voice Prompts in English, Spanish, and French

NVM-202 comes with pre-installed voice prompts in three languages: English, Spanish, French.

Being bilingual, NVM-202 can use, at most, two of these languages at a time. NVM-202 now categorizes languages as ACTIVE and STORED. To have NVM-202 use a language, you must place it in the ACTIVE category. To keep a language stored, but not used, you place it in the STORED category. You also have the option of deleting a language from the hard disk. All systems are shipped with English as the only ACTIVE language. Spanish and French are placed in the STORED category.

To select which languages are ACTIVE and STORED:

1. From the Main Menu: Select *Install (System)*.
2. Select *Language Selections*. You see the following message:

   !!!!! WARNING !!!!!
   This selection requires that the Voice Mail system be re-booted.

   Do you want to continue (Y/N) -

3. Press N to go back to the Main Menu.
   OR
   Press Y to re-boot (i.e., shut down and leave) the Voice Mail system to work with the active and stored languages. Wait for the following message:

   To view or modify the active languages for this system, press any key.

4. Press any key to go to the SYSTEM LANGUAGES Menu below. If you press nothing, the Voice Mail system restarts.

******* SYSTEM LANGUAGES Menu *******

Press this command:	To perform this action:
A	Switch a language from STORED to ACTIVE
S	Switch a language from ACTIVE to STORED
D	PERMANENTLY DELETE A STORED LANGUAGE

ACTIVE LANGUAGES:
1 English

STORED LANGUAGES:
1 Spanish
2 French

COMMAND - >

Pre-Installed Voice Prompts in English, Spanish, and French (cont'd)

5. To switch a language from STORED to ACTIVE: Press A, then enter the number of the stored language you wish to activate.
   OR
   To switch a language from ACTIVE to STORED: Press S, then enter the number of the active language you wish to store.
   OR
   Press D to permanently delete a stored language from the disk, then enter the number of the language you wish to delete. The system asks:

   Are you certain that you want to delete STORED LANGUAGE X [Y/N].

   Press Y to go ahead with the deletion or N to cancel it.

IMPORTANT NOTES
(1) The ACTIVE category must contain at least one language. If it does not, you will not be able to exit from this menu.
(2) The number that appears next to an ACTIVE or STORED language is solely for the purpose of switching the language to STORED or ACTIVE, not as an indicator of "Language 1" and "Language 2," terms used by NVM.
(3) NVM allows you to place more than 2 languages in the ACTIVE category, but will use only 2. To find out which language is Language 1 and Language 2, refer to the list below. Language 1 is the active language that appears closest to the top of the list and Language 2 is the active language that appears second closest to the top of the list. English Spanish French Italian German Russian Portuguese Greek Polish Norwegian Swedish Belgian Dutch Swiss Japanese Chinese Thai Korean Arabic

6. When done, press ENTER at the COMMAND prompt to exit and restart the Voice Mail system.

Expanded Install Menu

The Install Menu includes the ALLIANCE - S and the ALLIANCE - M/L.

Changed COM 1 Baud Rate

The default baud rate for COM1 is 9600.

Modified Start Up Mode

When NVM-202 starts up, the *Customize* command on the Full Screen Editor's Main Menu is highlighted instead of the *Install* command. In addition, *Customize* will be highlighted anytime NVM-202 automatically returns to the Main Menu (e.g., upon timeout).

Voice Prompts

632. Hundreds (Needed for Spanish and French)
Hundred (Needed for English)

633. Thousands (Needed for Spanish and French)
Thousand (Needed for English)

634. Millions (Needed for Spanish and French)
Million (Needed for English)

635. Billions (Needed for Spanish and French)
Billion (Needed for English)

636. One ____ (Needed only for English)

637. One ____ (Needed only for English)

638. _____ at _____ (Needed only for Spanish)

NITSUKO AMERICA
TELECOM DIVISION

Nitsuko America, Telecom Division
4 Forest Parkway
Shelton, CT 06484

TEL: 203-926-5400
FAX: 203-929-0535

Other Important Telephone Numbers

Sales:	203-926-5450
Customer Service:	203-926-5444
Customer Service FAX:	203-926-5454
Technical Service:	203-925-8801
Discontinued Product Service:	900-990-2541
Technical Training:	203-926-5430
Emergency Technical Service (After Hours) (Excludes discontinued products)	203-929-7920

NITSUKO AMERICA
TELECOM DIVISION

NVM-202

Voice Mail with Automated Attendant

Installation and Terminal Programming Guide

P/N 17570SWG02
Issue 1-0, April 1994
Printed in U.S.A. (183)

4 FOREST PARKWAY, SHELTON, CONNECTICUT 06484 TEL: 203-926-5400 FAX: 203-929-0535

This manual has been developed by Nitsuko America. It is intended for the use of its customers and service personnel, and should be read in its entirety before attempting to install or program the system. Any comments or suggestions for improving this manual would be appreciated. Forward your remarks to:

Nitsuko America, Telecom Division
4 Forest Parkway
Shelton, CT 06484

Attention: Manager, Technical Publications

Nothing contained in this manual shall be deemed to be, and this manual does not constitute, a warranty of, or representation with respect to, any of the equipment covered. This manual is subject to change without notice and Nitsuko America has no obligation to provide any updates or corrections to this manual. Further, Nitsuko America also reserves the right, without prior notice, to make changes in equipment design or components as it deems appropriate. No representation is made that this manual is complete or accurate in all respects and Nitsuko America shall not be liable for any errors or omissions. In no event shall Nitsuko America be liable for any incidental or consequential damages in connection with the use of this manual. This document contains proprietary information that is protected by copyright. All rights are reserved. No part of this document may be photocopied or reproduced without prior written consent of Nitsuko America.

©1994 by Nitsuko America. All Rights Reserved.
Printed in U.S.A.

Table of Contents

Preface — **An Introduction to NVM-202**

About NVM-202 3
About the Automated Attendant 3
About Voice Mail 3
About This Guide 3
About Related Documents 4
NVM-202 Specifications 5

Section 1: Getting Started with NVM-202

Chapter 1 — **Preparing for NVM-202 Start-Up**

What You Need 11
- Equipment Requirements 11
- Site Requirements 12
- Electrical Requirements 12

Preparing Your Telephone System 12
Connecting a Terminal or Monitor to NVM-202 12
Connecting NVM-202 to Your Telephone System 13

Chapter 2 — **Starting Up and Installing NVM-202**

Starting Up NVM-202 17
Installing NVM-202 17
- About the Default Installation Set-Up 17
- About Installing NVM-202 for the Telephone System 18
- About Installing the Number of Voice Mail Ports 18
- About Installing the Voice Compression Rate 19
- About Installing Mailboxes 19
- About Installing the Mailbox Default Security Code 19
- About Installing the Default Database 20
- Using the NVM-202 Installation Procedure 20
- Setting the Time, Date, and Port Option 21

Testing NVM-202 With Your Telephone System 21
Installing the Voice Mail Ports Only 22
Installing the Voice Compression Rate Only 22
Viewing the Current Installation Settings 22
Shutting Down NVM-202 23
Connecting a Modem to NVM-202 23

Chapter 3 — **Using the NVM-202 Menus and Database**

About the MAIN Menu 27
Using a Menu 28
Using the Database 28
Getting Help 29

Section 2: Customizing NVM-202

Chapter 4 **Customizing the Automated Attendant**

How the Automated Attendant Answers Calls 35
How the Automated Attendant Provides Routing Options 38
- Screened transfer to an extension 38
- Unscreened transfer to an extension 40
- Transfer to a Mailbox 41
- Route to an Extension Number Directory 42
- Route to an Extension Name Directory 42
- Route to Quick Message 43
- Route to Voice Mail 43
- Route to "Hang up" 43
- Undefined Routing 43
- Route to a Mailbox 43

How the Automated Attendant Handles Calls: A Flowchart Summary 50

Chapter 5 **Customizing System and Port Options**

System Options 53
- Site ID 53
- System password 53
- Time limit for mailbox logon 53
- Limit on mailbox logon attempts 54
- Daily maintenance time 54
- Silence limit for recording 55
- Mailbox Default Security Code 55
- Time limit for dialing commands 55
- Limit on dialing command attempts 55
- Subscriber msg length 56
- Nonsubscriber msg length 56
- Greeting for quick msg/mailbox trf 56
- Hold retrieval string 56
- Ringdown string 57
- Min entry for Directory Dialing 57
- Eliminate recording silence 57
- Flash timer 57
- Wait for first protocol digit 58
- Wait for subsequent protocol digits 58
- Wait for last protocol digit 58

Port Options 59
- In Service 59
- Allow Msg Notification & Lamp callouts 59
- Extension 60
- Answering Schedule Table 60

Chapter 6 **Customizing Mailbox Options**

The Default Mailbox Numbering Plan 63
Creating or Re-assigning a Mailbox 64
Deleting a Mailbox 65

Section 2: Customizing NVM-202 (cont'd)

Chapter 6 Customizing Mailbox Options (cont'd)

Call Routing Mailboxes 66
- Type 67
- Name 68
- Department 68
- Dial Action Table 68
- Rings before redirect trf 69
- Directory List 69
- Directory List to use 70

Subscriber Mailboxes 71
- Type 72
- Security Code 72
- Name 72
- Department 73
- Extension 73
- Msg Wait Lamp 73
- Next Call Routing mailbox 74
- Block Auto Att. 75
- System Admin. 75
- Msg Notification 75
- Number of msg 77
- Msg playback FIFO/LIFO 77
- Directory List 77
- Forced unscreened transfer 78
- Park/Paging string 78
- Call Waiting string 80
- Call Announcing 82
- Auto erase/save of messages 83
- Message retention 84
- Recording conversation beeps 84

Trunk Mailboxes 87
- Type 87
- Name 88
- Department 88
- Extension 88
- Answering Schedule Table 88
- Directory List 88

Message Center Mailboxes 89
- Type 90
- Security Code 91
- Name 91
- Department 91
- Extension 91
- Msg Wait Lamp 92
- Next Call Routing mailbox 92
- Msg Notification 93
- Number of msg 94
- Msg playback FIFO/LIFO 95
- Directory List 95
- Forced unscreened transfer 95
- Auto erase/save of messages 96

Section 2: Customizing NVM-202 (cont'd)

Customizing Mailbox Options (cont'd)

Message Center Mailboxes (cont'd)
- Message retention....96
- Recording conversation beep....96

Guest Mailboxes....99
- Type....100
- Security Code....100
- Name....100
- Department....101
- Extension....101
- Msg Wait Lamp....101
- Msg Notification....102
- Number of msg....104
- Record reply only....104
- Msg playback FIFO/LIFO....104
- Directory List....104
- Forced unscreened transfer....105
- Auto erase/save of messages....105
- Message retention....105
- Recording conversation beep....105

Distribution Mailboxes....107
- Type....107
- Name....108
- Department....108
- Distribution List....109
- Directory List....108

Announcement Mailboxes....109
- Type....110
- Security....110
- Name....110
- Department....111
- Play announcement....111
- Hang up after announcement....111
- Directory List....111

ACD Announcement Mailboxes....113
- Type....114
- Name....114
- Department....114
- Directory List....114

Directory Dialing Mailboxes....115
- Type....118
- Name....118
- Department....118
- Dial Action Table....118
- Rings before redirect transfer....119
- Directory List....119
- Directory List to use....120

Future Delivery Mailboxes....121
- Type....122
- Security Code....122
- Name....122
- Department....122
- Number of msg....123
- Directory List....123

Section 2: Customizing NVM-202 (cont'd)

Chapter 7 **Customizing the Answering Schedule and Dial Action Tables**

Answering Schedule Table....127
- Schedule # Day (s) or Date....128
- Schedule # Time....128
- Schedule # Mailbox....128

Dial Action Table....129
- Key # (0-9) Action....130
- Key # (0-9) Number....131
- TIMEOUT Action....131

Chapter 8 **Customizing Message Notification Options and Distribution Lists**

Message Notification Options....135
- Digital pager callback number....135
- Delay before dialing digital pager....135
- Delay before pager announcement....136
- Access digits before local callout....136
- Access digits before long distance callout....136
- Wait between pager callouts....137
- Wait between nonpager callouts....137
- Number of callout attempts....137
- Wait between RNA callouts....137
- Wait between BUSY callouts....137
- Send pager callouts until ack....138
- Number of rings per callout....138
- Notification callout report....138

Distribution Lists....139

Section 3: Handling System Administration

Chapter 9 **Viewing and Printing Reports**

Reports....145
- Port Usage....145
- Mailbox Options....146
- Mailbox Directory (by Type)....146
- Mailbox List (Numerical)....146
- Mailbox Message Usage....146
- Mailbox Call Handling Flags....147
- Mailbox Access....147
- Message Notification Callouts....148
- Distribution Lists....148
- Automated Attendant per Port....148
- Automated Attendant per Trunk....148
- Error/Activity Log....148
- All Reports....148

Section 3: Handling System Administration (cont'd)

Chapter 10 **Using Maintenance and Diagnostics**

Maintenance 151
- Set System Time 151
- Set System Date 152
- Set Daily Maintenance Time 152
- Run disk defragmentation 153
- Set Ports In/Out of Service 153
- Set Up Serial Communications Ports 153
- Remotely Backup/Restore the Database 155
- Shut Down the Voice Mail System 155

Diagnostics 156

Chapter 11 **Using System Administrator Options**

Recording a Broadcast Message 161
Recording a Welcome Message 162
Recording an Instruction Menu 164
Recording Directory Dialing Message 166
Recording an Announcement Message 168
Recording Mailbox Names 169
Overriding the Answering Schedule 170
Customizing the System Voice Prompts 171
Setting the System Time 172
Setting the System Date 173
Getting the System Version Number 174
Preparing for Power-Down: Shutting Down the System 175

Appendix A **NVM-202 System Voice Prompts** 221

Preface

An Introduction to NVM-202

About NVM-202 3
About the Automated Attendant 3
About Voice Mail 3
About This Guide 3
About Related Documents 4
NVM-202 Specifications 5

An Introduction to NVM-202

About NVM-202

The NVM-202 series provides a fully-integrated Automated Attendant and Voice Mail for your telephone system. NVM-202 is compatible with the ONYX VS and BUSINESSCOM DS01 telephone systems.[1]

About the Automated Attendant

The Automated Attendant answers your company's incoming calls. One common set-up is to have the Automated Attendant greet a caller with a recorded Welcome Message and Instruction Menu. A typical Welcome Message is: ***Thank you for calling company ABC.*** A typical Instruction Menu is: ***Please dial the extension number you wish to reach, or dial 1 for sales, 2 for customer service,*** etc. All the caller has to do is dial a code to route their own call. Some of the routing options include routing to an extension, to an extension directory, or to Voice Mail.

Using the NVM-202 Answering Schedule Tables, you can have the Automated Attendant welcome and instruct callers one way during the day, another way at night, etc. You simply program the day, date and time a specific greeting should play.

About Voice Mail

The Voice Mail system lets outside callers leave recorded messages for the people in your company, and it lets people in your company leave recorded messages for each other. The messages get stored in each person's personal (Subscriber) voice mailbox.

A Subscriber accesses the Voice Mail system by calling their voice mailbox - from inside or outside the company. After calling, a Subscriber presses codes on their Touch Tone phone to listen to their messages, record and send a message, check to see if a recipient listened to their message, record a mailbox name/greeting and more.

And NVM-202 provides voice prompts (step-by-step recorded instructions) to guide callers in using the system (see the User's Guide for more detail). In all the NVM-202 documentation, voice prompts will always appear in bold italics like this: ***Please dial the extension number you wish to reach.*** If desired, you can re-record all the voice prompts in someone else's voice.

About This Guide

The **NVM-202 Installation and Terminal Programming Guide (P/N 17570SWG02)** shows you how to install NVM-202 and customize it using a terminal or monochrome monitor.

Section 1, *Getting Started With NVM-202*, shows you how to install NVM-202 and use the keyboard to move around the menus and database.

Section 2, *Customizing NVM-202*, shows you how to customize the NVM-202 system.

Section 3, *Handling System Administration*, shows you how to use reports, maintenance, diagnostics and System Administrator options.

Appendix A lists the NVM-202 system voice prompts.

---

1 NVM-202 may be used with other ONYX telephone systems as long as you change the NVM-202 mailbox numbering plan. Call your Account Representative for details. See also *About Installing Mailboxes* in Chapter 2.

About Related Documents

In addition to the NVM-202 Installation and Terminal Programming Guide, there are these related NVM-202 documents:

NVM-202 Installation and Telephone Programming Guide (P/N 17570INS02) shows you how to install NVM-202 and program (customize) it from a System Administrator extension.

NVM-202 Quick Set-Up and Telephone Programming Guide (P/N 17570QSG01) provides brief instructions for installing NVM-202 and programming NVM-202 from a System Administrator extension. The guide lists the default value for each NVM-202 feature and shows you how to modify the default.

NVM-202 User's Guide (P/N 17570SUG02) explains all the NVM-202 user features (that is, the features that the mailbox users can activate from their telephone). The User's Guide also provides operating instructions for these features.

NVM-202 Quick Reference Guide (P/N 17570QRC02) provides abbreviated operating instructions for all user features.

NVM-202 System Administrator's Quick Reference Guide (P/N 17570QRA02) provides abbreviated operating instructions for the options on the System Administrator menu.

NVM-202 Specifications

Ports	3
Voice Storage Capacity	4 hours
Mailboxes	200
Telephone System Interface	For each port: A 2500 Interface (ASI) with DTMF Receiver (P/N 89749) and a telephone system keyset port
Direct Terminal Access	Customer-provided Monochrome Monitor and Keyboard. Direct Terminal Access is also available through a customer-provided RS-232-C (dumb), VT100, or ANSI terminal. Diagnostics requires a VT100 terminal or monochrome monitor.
Remote Terminal Access	Customer-provided external modem
Electrical Requirements	105-120 VAC, 60 HZ
Environmental Requirements	
Room Temperature	50-104°F (10-40°C)
Humidity	20-85% non-condensing
Reliability	Designed to meet 50,00 hours MTBF
Safety Approvals	UL, CSA
EMI Emissions	Complies with FCC part 15 class A, SOR - 88475 class A
Registrations	
FCC	Complies with FCC part 68 REG # 1A92PJ-10975-VM-E
DOC	Complies with DOC CS03
PC Cabinet Dimensions	
Length	15"
Width	14 1/2"
Height	3 1/2"
Weight	15 lbs

Section 1:

Getting Started with NVM-202

Chapter 1

Preparing for NVM-202 Start-Up

What You Need 11
Equipment Requirements 11
Site Requirements 12
Electrical Requirements 12
Preparing Your Telephone System 12
Connecting a Terminal or Monitor to NVM-202 12
Connecting NVM-202 to Your Telephone System 13

What You Need

➤ Equipment Requirements

- NVM-202 cabinet and power cord
- Customer-provided Monochrome Monitor. Or, an RS-232-C (dumb), VT100, or ANSI terminal. A VT100/ANSI terminal or Monochrome Monitor is required for Diagnostics.

  For a terminal, you also need: An RS-232-C cable with a 9-pin to 25-pin adaptor and a null modem adaptor. Or, a 9-pin to 25-pin null modem cable. The pin-outs are shown below:

9-pin to 25-pin Adaptor

To 202	To Null Modem
2	3
3	2
4	20
6	6
7	4
8	5
1	8
5	7

Null Modem Adaptor

To 9/25-pin Adaptor	To Terminal
3	2
2	3
20	6
6	20
4	8
5	
8	4
	5
7	7

9-pin to 25-pin Null Modem Cable

To 202	To Terminal
2	2
3	3
4	6
6	20
7	8
8	
1	4
	5
5	7

  Gender requirements for RS-232-C cable assembly: One end must be 9-pin female, the other end must fit into the terminal connector

- For each Voice Mail port: A 2500 Interface (ASI) with a DTMF Receiver (P/N 89749) and a telephone system keyset port
- For the two-port connector on the NVM-202 cabinet: One RJ14 to RJ11 adaptor (e.g., Radio Shack RJ14 to RJ11 adaptor, Catalog Number 279-401 or Suttel Part # SE-174) Also, three two-pair modular line cords.
- For the one-port connector on the NVM-202 cabinet: Two two-pair modular line cords
- Surge protector
- Parallel printer (IBM PC-XT or AT compatible) and parallel printer cable for reports
- The manuals for your telephone system

What You Need (cont'd)

➤ Equipment Requirements

- For remote programming and/or diagnostics: Hayes-compatible modem and RS-232-C cable. Use the pin-out for the 9-pin to 25-pin Adaptor (see page 11)

➤ Site Requirements

- Dust-free, away from large motors, with adequate rear ventilation for NVM-202 cabinet
- Contains a table or stand for the NVM-202 cabinet, no more than 25 feet from telephone system
- 50-104°F (10-40°C)
- 20-85% non-condensing humidity

➤ Electrical Requirements

- Dedicated (and grounded) three-prong outlet (105-120 VAC, 60 HZ), no more than 5 feet from NVM-202

Preparing Your Telephone System

For NVM-202 to work properly, your telephone system must be equipped with compatible hardware and it must be programmed for Voice Mail. Use programs 3, 12, 14, 18, and 19 in the telephone system manuals.

Connecting a Terminal or Monitor to NVM-202

Refer to Figure 1 as you use these instructions.

1. Unpack the NVM-202 cabinet and power cord. Make sure the power switch is in the "down" position (off).

2. If you are using an RS-232-C terminal: Connect the terminal's keyboard to the terminal.
   OR
   If you are using a monitor: Connect the monitor's keyboard to the Keyboard connector on the NVM-202 cabinet.

3. **For terminals only:**
   Set the terminal's communication parameters (see the manual for your terminal): 1200 baud, 8 data bits, 1 stop bit, no parity.

   Plug the null modem and 9-pin to 25-pin adaptors into the RS-232-C cable (if you are using these adaptors).

   Note: To change the communication parameters for COM 1, see *Maintenance* in Chapter 10.

4. Use the RS-232-C cable assembly to connect the RS-232-C terminal to COM 1.
   OR
   Plug the monitor's 9-pin cable into the Monitor Video connector on the NVM-202 cabinet. Plug the monitor's power cable into the Monitor Power connector on the NVM-202 cabinet. Plug the other end of the monitor's power cable into an AC outlet.

Connecting NVM-202 to Your Telephone System

Refer to Figure 1 as you use the installation instructions below.

To connect NVM-202 to the telephone system:

1. Place the NVM-202 cabinet in a location not more than 25 feet from the telephone system.

2. For the two-port connector (Ports 1 and 2):
   - Plug one end of a modular line cord into the two-port connector. Plug the other end into the RJ14 to RJ11 adaptor.
   - Plug each RJ11 line cord (from the adaptor) into the PHONE jack on a 2500 Interface. The RJ11 line cord labeled L1 connects to Port 1 and L2 connects to Port 2.
   - Plug a modular cord into each LINE jack on the 2500 Interfaces. Plug the other end into the Keyset Ports.

3. For the one-port connector (Port 3):
   - Plug one end of a modular line cord into the one-port connector. Plug the other end into the PHONE jack on the 2500 Interface.
   - Plug a modular cord into the LINE jack on the 2500 Interface. Plug the other end into the Keyset Port.

4. Plug the NVM-202 power cord into the AC Power Connector on the NVM-202 cabinet. Plug the surge protector into a dedicated AC outlet. Plug the other end of the power cord into the surge protector.

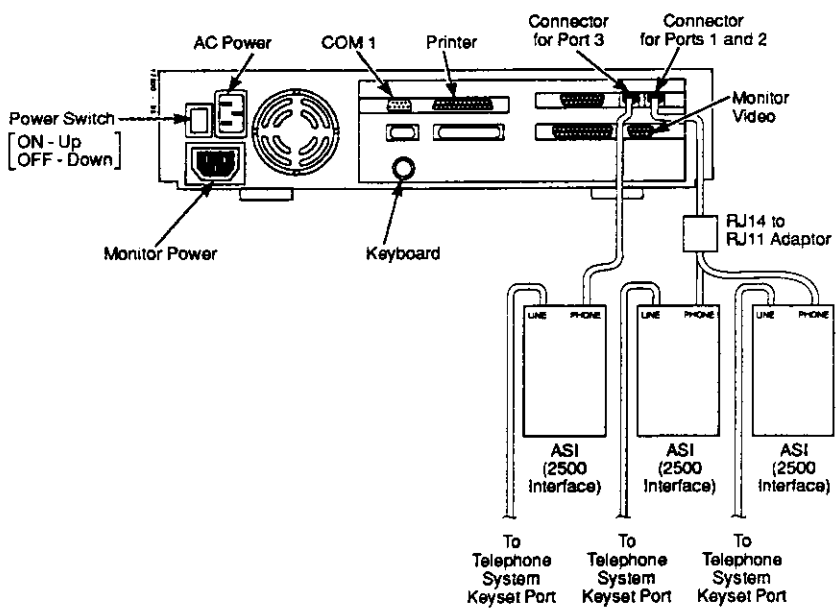

Figure 1: Connecting NVM-202 to Telephone System

Chapter 2

Starting Up and Installing NVM-202

Starting Up NVM-202 17
Installing NVM-202 17
About the Default Installation Set-Up 17
About Installing NVM-202 for the Telephone System 18
About Installing the Number of Voice Mail Ports..... 18
About Installing the Voice Compression Rate 19
About Installing Mailboxes..... 19
About Installing the Mailbox Default Security Code..... 19
About Installing the Default Database..... 20
Using the NVM-202 Installation Procedure..... 20
Setting the Time, Date, and Port Option 21
Testing NVM-202 With Your Telephone System..... 21
Installing the Voice Mail Ports Only..... 22
Installing the Voice Compression Rate Only..... 22
Viewing the Current Installation Settings..... 22
Shutting Down NVM-202..... 23
Connecting a Modem to NVM-202..... 23

Starting Up NVM-202

To start up NVM-202:

1. Set the power switch to the "ON" position (up).
2. Wait for the MAIN Menu (below).

```
******* SYSTEM 202 MAIN Menu *******

Press command below,   To use:          You will get this
then press Enter:                       prompt at the cursor:

   IN                  Install System   INSTALL ->
   CU                  Customize Database  CUSTOMIZE ->
   RP                  View/Print Reports  REPORTS ->
   MA                  Maintenance      MAINTENANCE ->
   DI                  Diagnostics      DIAGNOSTICS ->

> After you select a command, the system may ask you for a
  password (except when you use RP). The communications
  manager can give you the password.

> For help on using the "Help" command: Press H, space, H, Enter
```

To install NVM-202, you use the first item on the MAIN Menu, *Install System*, which is described in the topics that follow. For more information on the MAIN Menu, on using menus, and on getting help screens, see Chapter 3.

Installing NVM-202

➤ About the Default Installation Set-Up

NVM-202 was pre-installed at the factory with the following default set-up:

- Telephone System: One- or Two-Cabinet ONYX VS or BUSINESSCOM DS01 (8 x 24 or 16 x 48)
- Number of Voice Mail ports: 3
- Voice Compression Rate: 32 Kbits/sec. This setting favors message sound quality over message storage capacity.
- Subscriber Mailboxes: One Subscriber Mailbox for each extension number in the 16 x 48 telephone system. The Subscriber Mailboxes are numbered to match the default extension numbering plan. That is, Subscriber Mailboxes 300-347 are assigned to extension numbers 300-347, respectively.
- A Trunk Mailbox for each trunk number in the telephone system. The Trunk Mailboxes are numbered to match the default trunk numbering plan. That is, Trunk Mailboxes 348-363 are assigned to trunk numbers 348-363, respectively.
- Future Delivery, Announcement, Call Routing, Message Center, Guest and Distribution Mailboxes. For a listing of their default mailbox numbers, see *The Default Mailbox Numbering Plan* in Chapter 6.
- Mailbox Default Security Code (for Subscriber Mailboxes): None
- Default NVM-202 Feature Database

Installing NVM-202 (cont'd)

➤ About the Default Installation Set-Up (cont'd)

Use the chart below for instructions on how to proceed.

To:	See:
View the current installation settings	*Viewing the Current Installation Settings* in this chapter
Read more about each item in the default set-up	The topics that follow in this chapter
Accept the default settings and proceed	*Setting the Time, Date and Port Option* in this chapter
Change only the Voice Compression Rate	*Installing the Voice Compression Rate Only* in this chapter
Change only the number of Voice Mail ports	*Installing the Voice Mail Ports Only* in this chapter
Install a Mailbox Default Security Code	*Installing NVM-202* in this chapter
Re-install the Subscriber or Trunk Mailboxes for a different extension or trunk numbering plan	*Installing NVM-202* in this chapter
Install NVM-202 for a different telephone system, re-install the default database, and/or change: the number of Voice Mail ports, Voice Compression Rate, Mailbox Default Security Code, Mailbox Numbers	*Installing NVM-202* in this chapter

➤ About Installing NVM-202 for the Telephone System

You can install NVM-202 for the following telephone systems:

- One- or Two-Cabinet VS or DS01 (8 x 24 or 16 x 48)
- Three-Cabinet VS or DS01 (24 x 72)

The difference between installing for a one- or two-cabinet versus a three-cabinet is in the number of Subscriber and Trunk Mailboxes NVM-202 installs. See *Installing Mailboxes* in this chapter.

➤ About Installing the Number of Voice Mail Ports

You can change the number of Voice Mail ports that are installed in the NVM-202. For example, if you wish to install only 2 Voice Mail ports, enter 2. NVM-202 installs ports 1-2.

Installing NVM-202 (cont'd)

➤ About Installing the Voice Compression Rate

The Voice Compression Rate determines how NVM-202 stores messages. NVM-202 can store messages in one of two ways: to favor message sound quality or to favor message storage capacity. To favor message sound quality, enter a Voice Compression Rate of 32 Kbits/sec. To favor message storage capacity, enter 24 Kbits/sec.

➤ About Installing Mailboxes

The installation procedure installs a Subscriber Mailbox for each extension number and a Trunk Mailbox for each trunk number. You simply enter the starting (first) number in the extension and/or or trunk numbering plan. NVM-202 then assigns the following:

- **For 8 x 24 or 16 x 48 telephone system:** 16 Trunk Mailboxes and 48 Subscriber Mailboxes.
- **For 24 x 72 telephone system:** 24 Trunk Mailboxes and 72 Subscriber Mailboxes

The mailbox numbers start at the first number in the numbering plan and increase consecutively. For example: If the starting extension number in a 16 x 48 is 350, NVM-202 create 48 Subscriber Mailboxes, numbered 350-397. And, NVM-202 assigns Subscriber Mailboxes 350-397 to extension numbers 350-397, respectively.

If there are extension or trunk numbers out of the installed range, you must manually create mailboxes for them. For instructions on how to do this, see *Creating or Re-assigning a Mailbox* in Chapter 6.

For a listing of the default numbering plan for all types of mailboxes, see *The Default Mailbox Numbering Plan* in Chapter 6.

Note: If the extension and/or trunk numbering plan is between 399-499, NVM-202 changes the default mailbox numbering plan. That is, the mailbox types that are normally numbered 399-499 get renumbered as 799-899, respectively. For example: Future Delivery Mailbox 399 would be renumbered as mailbox 799. If the extension and/or trunk numbering plan is between 399-499 **and** 799-899, NVM-202 renumbers mailboxes 399-499 as 599-699.

For more information on the default mailbox numbering plan, see *The Default Mailbox Numbering Plan* in Chapter 6.

➤ About Installing the Mailbox Default Security Code

The installation procedure lets you assign a default Security Code to each Subscriber Mailbox. A Security Code is a number that a Subscriber must dial to call (log on to) their mailbox. If you assign 1111 as the default Security Code, NVM-202 assigns 1111 to all Subscriber Mailboxes. The Subscribers can change the default Security Code from their mailboxes (see *Changing the Security Code* in the User's Guide).

Note: If you install a default Security Code, then manually create new Subscriber Mailboxes, you can assign a default Security code to the new mailboxes by using the *System Options* item on the CUSTOMIZE DATABASE Menu (see also *System Options* in Chapter 5). Do **not** run the installation procedure again.

Installing NVM-202 (cont'd)

➤ About Installing the Default Database

The installation procedure automatically installs the NVM-202 default database. The default value for each database option is listed with each database option in Section 2.

➤ Using the NVM-202 Installation Procedure

The NVM-202 installation procedure lets you install NVM-202 for your telephone system. After you select your telephone system from the INSTALL SYSTEM Menu, you can install (change):

- Number of Voice Mail ports (see also *About Installing the Number of Voice Mail Ports* in this chapter)
- Voice Compression Rate (see also *About Installing the Voice Compression Rate* in this chapter)
- Extension or trunk numbering plan for Subscriber and Trunk Mailboxes (see also *About Installing Mailboxes* in this chapter)
- Mailbox Default Security Code (see also *About Installing the Mailbox Default Security Code* in this chapter)

If you change one or all of the following, NVM-202 automatically installs the default NVM-202 database:

- The associated telephone system
- Extension or trunk numbering plan for the Subscriber and Trunk Mailboxes
- Mailbox Default Security Code.

NVM-202 does not install the default NVM-202 database if you change only the number of Voice Mail ports or Voice Compression Rate. If you need to change only the number of Voice Mail ports and/or Voice Compression Rate, see *Installing the Voice Mail Ports Only* and *Installing the Voice Compression Rate Only* in this chapter.

To install NVM-202:

1. With the MAIN Menu on your screen: Press IN, then press Enter.
2. Enter the password, if the system asks for it, then press Enter. You see the INSTALL SYSTEM Menu (below).

   The default password is CTL. To change the password, see *System Options* in Chapter 5.

```
******* INSTALL SYSTEM Menu *******

Press command below,        To:
then press Enter:

        1                   Install ONYX VS 16/48
        2                   Install ONYX VS 24x72
        3                   Install Voice Mail Ports only
        4                   Install Voice Compression Rate only
        5                   View Current Settings
        E                   Exit to Main Menu

> For help on using the "Help" command: Press H, space, H, Enter
```

Installing NVM-202 (cont'd)

➤ Using the NVM-202 Installation Procedure (cont'd)

3. Press 1 for 8 x 24 (One-Cabinet) or 16 x 48 (Two-Cabinet).
   OR
   Press 2 for 24 x 72 (Three-Cabinet).
4. Follow the instructions on the screen:
   - Be sure to enter Y for "Yes" or N for "No" when appropriate. After you press Y or N, press the Enter key.
   - To enter a number: Type the number, then press Enter.
5. Wait for the message below (it may take a few minutes):

   The installation of ___ Voice Mail ports is complete.
   The Voice Mail installation for _____ is complete.

6. Press E to exit. You see the MAIN Menu. If you see the message, INSTALLATION MUST BE COMPLETED BEFORE CONTINUING, re-do the installation procedure (steps 3-6).
7. Go to the topic, *Setting the Time, Date, and Port Option* in this chapter.

➤ Setting the Time, Date, and Port Option

When you are done installing NVM-202:

- Set the system time and date. To do this, select *Maintenance* on the MAIN Menu (see *Maintenance* in Chapter 10).
- Assign the Keyset extension to each port. To do this, select *Customize Database* on the MAIN Menu, then *Port Options* (see also *Port Options* in Chapter 5).

Testing NVM-202 With Your Telephone System

When you complete the installation procedure, NVM-202 should be running. To check NVM-202 operation, do the following two tests:

Test 1 (for Voice Mail):

1. At a Multibutton extension, lift the handset.
2. Call the extension's Subscriber Mailbox as follows:
   Press the Message (MSG) key.
3. Listen for: ***You have no messages*** (if you did not install a Mailbox Default Security Code), or ***Please enter your security code*** (if you installed a Mailbox Default Security Code).

Test 2 (for Automated Attendant):

1. Call into a trunk that you have assigned to Voice Mail.
2. Listen for: ***Thank you for calling. If you are calling from a Touch Tone phone, please dial the extension number you wish to reach or dial 0 for assistance. If you are calling from a rotary dial phone, please stay on the line for assistance.***

If test 1 or test 2 fails, recheck all the equipment connections, the telephone system programming, and re-do the installation procedure.

Installing the Voice Mail Ports Only

You can use the INSTALL SYSTEM Menu to change only the number of installed Voice Mail ports.

To install (change) only the number of Voice Mail ports:

1. From the MAIN Menu: Press IN, then press Enter.
2. Enter the password (default password = CTL), if the system asks for it, then press Enter. You see the INSTALL SYSTEM Menu.
3. Press 3, then press Enter.
4. Follow the instructions on the screen.
   Press Y for "Yes" or N for "No." Remember to press the Enter key when you finish entering a data code.
5. Wait for the message:
   The installation of ___ Voice Mail ports is complete.
6. Press H, then Enter to see the INSTALL SYSTEM Menu. Or: press E, then Enter to exit to the MAIN Menu.
7. If you are installing the system for the first time, go to the topic, *Setting the Time, Date, and Port Option* in this chapter.

Installing the Voice Compression Rate Only

You can use the INSTALL SYSTEM Menu to change only the Voice Compression Rate (see also page 19). Changing the Voice Compression Rate erases all user-recorded messages.

To install (change) only the Voice Compression Rate:

1. From the MAIN Menu: Press IN, then press Enter.
2. Enter the password (default password = CTL), if the system asks for it, then press Enter.
3. Press 4, then press Enter.
4. Follow the instructions on the screen.
   Press Y for "Yes" or N for "No." Remember to press the Enter key when you finish entering a data code.
5. When you see the INSTALL prompt: Press H, then Enter to see the INSTALL SYSTEM Menu. Or: Press E, then Enter to exit to the MAIN Menu.
6. If you are installing the system for the first time, go to the topic, *Setting the Time, Date, and Port Option* in this chapter.

Viewing the Current Installation Settings

You can use the INSTALL SYSTEM Menu to view the current installation settings.

To view the current installation settings:

1. From the MAIN Menu: Press IN, then press Enter.
2. Enter the password (default password = CTL), if the system asks for it, then press Enter.
3. Press 5, then press Enter.
   You see the current settings and the INSTALL prompt.
4. Press H, then Enter to see the INSTALL SYSTEM Menu. Or: Press E, then Enter to exit to the MAIN Menu.
5. If you are installing the system for the first time, go to the topic, *Setting the Time, Date, and Port Option* in this chapter.

Shutting Down NVM-202

To shut down NVM-202, you must use the SD command on the Maintenance Menu (see Chapter 10) or the PD command on the System Administrator Menu (see Chapter 11). Then you can reset NVM-202 (by pressing the Reset button on the front of the cabinet) or power it down.

WARNING: Do not turn off NVM-202 power or reset NVM-202 without first shutting down NVM-202. Doing so may corrupt the NVM-202 database.

Connecting a Modem to NVM-202

You can connect a modem to COM 1 and do remote programming, diagnostics, and maintenance. If a monitor or terminal is connected to COM 1, you must disconnect it.

To establish remote (modem) communications with NVM-202:

1. At the NVM-202 installation site: Connect an RS-232-C cable to COM 1 (male 9-pin connector). For a cable pin-out, see page 11. Use the pin-out for the 9-pin to 25-pin Adaptor. Connect the other end of the cable to the modem. Connect a telephone line to the modem.
2. Set the serial communications parameters of COM 1 using the *Maintenance* item on the MAIN Menu. The default settings for COM 1 are as follows: 1200 baud, 8 data bits, 1 stop bit, no parity.
3. At the remote site, connect your modem, terminal, and phone line. Call NVM-202. Wait for carrier tone.
4. Press Enter at the remote terminal. You see the MAIN Menu or the prompt, MAIN MENU ->. If you see the prompt, you can get the MAIN Menu by pressing H, then Enter.

Chapter 3

Using the NVM-202 Menus and Database

About the MAIN Menu 27
Using a Menu 28
Using the Database 28
Getting Help 29

About the MAIN Menu

******* SYSTEM 202 MAIN Menu *******

Press command below, then press Enter:	To use:	You will get this prompt at the cursor:
IN	Install System	INSTALL ->
CU	Customize Database	CUSTOMIZE ->
RP	View/Print Reports	REPORTS ->
MA	Maintenance	MAINTENANCE ->
DI	Diagnostics	DIAGNOSTICS ->

> After you select a command, the system may ask you for a password (except when you use RP). The communications manager can give you the password.

> For help on using the "Help" command: Press H, space, H, Enter

Install System let you re-install the number of Voice Mail ports, the Voice Compression Rate, and the default database for NVM-202. It also lets you view the current installation settings. See Chapter 2.

Customize Database lets you change the NVM-202 database to meet the customer's communications needs. See Section 2, *Customizing NVM-202*.

View/Print Reports lets you view (display) or print reports on the NVM-202 system. See Chapter 9, *Viewing and Printing Reports*.

Maintenance lets you change the system time, date, daily maintenance time, Voice Mail port status (in/out of service), and COM port parameters. It also lets you shut down the system and remotely backup and restore the database (see *Maintenance* in Chapter 10).

Diagnostics let you monitor port activity as it happens (see *Diagnostics* in Chapter 10).

When you select an item on the MAIN Menu, NVM-202 asks you to enter a password. The default password is CTL. You do not have to re-enter the password every time you use the MAIN Menu unless you do not make any terminal entries for 10 minutes. To change the password, you use the *System Options* item on the CUSTOMIZE DATABASE Menu (see *System Options* in Chapter 5).

Using the NVM-202 Menus and Database

Using a Menu

The chart below shows you how to use the NVM-202 menus.

To:	Do this:
Select a menu item	Press its command (in the left column), then press the Enter key
Exit a menu (except the MAIN Menu)	Press E (you will return to the MAIN Menu)

NVM-202 does not let you exit the MAIN Menu without a special password.

To further specify what you want to program, NVM-202 lets you enter codes after you press a menu command. For example, you can press DAT for the Dial Action Tables or you can press DAT 3 to access Dial Action Table 3. For instructions on how to enter codes after a menu command, you must view the Help screen for the menu command as follows: Press H, space, menu command, Enter.

Using the Database

When you select a menu item from the CUSTOMIZE DATABASE Menu, you enter the NVM-202 database. The chart below shows you how to enter data and move through the database options.

To:	Do this:
Enter data	Type data, then press the Enter key to go to the next database option OR Type data, then press the Tab key to go the previous database option
Enter "Yes"	Press Y
Enter "No"	Press N
Make no change to displayed data and go to next option	Press Enter key
Make no change to displayed data and go to previous option	Press Tab key
Erase a mistake	Press Backspace key
Exit database	Press Esc key

Getting Help

The Help command lets you request a Help screen when the cursor is at a prompt (e.g., the INSTALL-> prompt).

To:	Do this:
See the menu of commands you can enter at a prompt	Press H, Enter
See a help screen for a specific menu command	Press H, space, command, Enter
Hide the menus (or re-show them)	Press H, space, -A, Enter
See the Help screen that contains all these Help options	Press H, space, H, Enter

NVM-202 automatically displays an abbreviated Help message when you make a mistake in using a command or entering data.

Section 2:

Customizing NVM-202

Chapter 4

Customizing the Automated Attendant

How the Automated Attendant Answers Calls 35
How the Automated Attendant Provides Routing Options 38
Screened transfer to an extension 38
Unscreened transfer to an extension 40
Transfer to a Mailbox 41
Route to an Extension Number Directory 42
Route to an Extension Name Directory 42
Route to Quick Message 43
Route to Voice Mail 43
Route to "Hang up" 43
Undefined Routing 43
Route to a Mailbox 43
How the Automated Attendant Handles Calls: A Flowchart Summary 50

How the Automated Attendant Answers Calls

Generally speaking, the NVM-202 Automated Attendant answers a trunk (outside) call as follows: it sends the caller to a mailbox and plays the message ("greeting") that is recorded for that mailbox. This applies to trunks that have been assigned to Voice Mail in telephone system programming. You can program NVM-202 to answer a trunk call using a:

- **Call Routing Mailbox**
  NVM-202 plays the recorded Welcome Message and Instruction Menu for this mailbox, then lets the caller dial a code to route their own call (for more information, see *How the Automated Attendant Provides Routing Options* in this chapter).
- **Message Center Mailbox**
  NVM-202 plays the Welcome Message for this mailbox, then a beep. The caller can leave a message after the beep. A Message Center Mailbox is primarily for rotary dial callers.
- **Announcement Mailbox**
  NVM-202 plays the Announcement Message for this mailbox (e.g., a movie schedule), then hangs up.
- **Directory Dialing Mailbox**
  NVM-202 plays the Directory Dialing Message and lets the caller dial letters to reach the desired person or mailbox.
- **Subscriber Mailbox**
  NVM-202 brings the caller into the Subscriber Mailbox (which belongs to an extension user) and plays, ***You have ___ messages.*** The caller can then listen to the messages or use other Voice Mail features.

For more information on these mailboxes, see Chapter 6.

Using an **Answering Schedule Table (1-16)**, you can program NVM-202 to answer an outside call using mailbox A during the day, mailbox B at night, mailbox C during the weekend, etc. To do this, you set up (program) a schedule with the day (s) or date and time that a particular mailbox should answer a call. Each Answering Schedule Table (AST) can have 20 day/date/time schedules. You can assign an AST to a trunk or port. If you assign an AST to a trunk, NVM-202 ignores the port's AST, if any. If you do not assign an AST to a trunk, NVM-202 uses the port's AST to answer any trunk that uses the port. See the flowchart on page 50.

For example, you could program an Answering Schedule Table with the three answering schedules below and assign it to trunk XXX.

- **Schedule 1:**
  Starting at 9 AM, Monday through Friday, NVM-202 answers a call using Call Routing Mailbox 411 and plays this Welcome Message and Instruction Menu:
  Thank you for calling ABC company. Please dial the extension number you wish to reach or dial 1 for an extension directory.
- **Schedule 2:**
  Starting at 5PM, Monday through Thursday, NVM-202 answers a call using Message Center Mailbox 415 and plays this Welcome Message:
  Thank you for calling ABC company. Our offices are closed and will re-open at 9:00 tomorrow morning. If you wish, you can leave a message after the tone. Otherwise, please call again.

How the Automated Attendant Answers Calls (cont'd)

- **Schedule 3:**
  Starting at 5 PM on Friday, NVM-202 answers a call using Announcement Mailbox 400 and plays this Announcement Message: ***Thank you for calling ABC company. Our offices are closed for the weekend. Our normal business hours are 9:00-5:00, Monday to Friday. We look forward to helping you then.***

NVM-202 also allows the System Administrator to override the answering schedule that is in effect from any Touch Tone telephone (see *Overriding the Answering Schedule* in Chapter 11).

In addition, NVM-202 can answer an extension user's direct lines. The extension user simply has to forward calls to their mailbox (see the User's Guide). See also the Subscriber Mailbox option, *Next Call Routing Mailbox* in Chapter 6.

By default, Answering Schedule Tables (AST) 1-4 are each set up with the four schedules shown below. A Call Routing Mailbox (CR) is assigned to each schedule. NVM-202 answers all trunks using AST 1, which is assigned to each port.

	AST 1	AST 2	AST 3	AST 4
1. Morn (Mo-Fr, 8AM)	CR 411	CR 421	CR 431	CR 441
2. Aft (Mo-Fr, 12PM)	CR 412	CR 422	CR 432	CR 442
3. Eve (Mo-Th, 5PM)	CR 413	CR 423	CR 433	CR 443
4. Wkend (Fr, 5PM):	CR 414	CR 424	CR 434	CR 444

The default greeting (that is, Welcome Message and Instruction Menu) for all Call Routing Mailboxes is:
Thank you for calling. If you are calling from a Touch Tone phone, please dial the extension number you wish to reach or dial 0 for assistance. If you are calling from a rotary dial phone, please stay on the line for assistance.

For the default routing options (Dial Action Table) for Call Routing Mailboxes 411-414, see page 44.

To customize the way the NVM-202 Automated Attendant answers calls:

1. Make sure each trunk that NVM-202 should answer has a corresponding trunk mailbox.
   FROM MAIN MENU:
   Select *Customize Database*, then *Mailbox Options*.
   See also *Trunk Mailboxes* in Chapter 6.

2. Determine the types of mailboxes that should answer calls and at what times they should answer. You may wish to make a chart like this:

Trunk or Port	Answering Schedules
Trunk 348	Call Routing 411, 8:30 AM, Mo-Fr Message Center 415, 5 PM, Mo-Th Announcement 400, 5 PM, Fr

How the Automated Attendant Answers Calls (cont'd)

3. Create and customize the mailboxes (in step 2) as follows:
   FROM MAIN MENU:
   Select *Customize Database*, then *Mailbox Options*.

   For more information on mailboxes, see Chapter 6.

   If a Call Routing Mailbox or Directory Dialing Mailbox is going to answer a call, you must assign a Dial Action Table to the mailbox. For more information on Call Routing Mailboxes, see *How the Automated Attendant Provides Routing Options* in this chapter. For information on Directory Dialing Mailboxes, see *Directory Dialing Mailboxes* in Chapter 6.

4. Record a greeting (message) for each mailbox (in step 3) as follows:
   FOR CALL ROUTING MAILBOXES:
   Record a Welcome Message and Instruction Menu (see Chapter 11).
   FOR MESSAGE CENTER MAILBOXES:
   Record a Welcome Message (see Chapter 11).
   FOR ANNOUNCEMENT MAILBOXES:
   Record an Announcement Message (see Chapter 11).
   FOR DIRECTORY DIALING MAILBOXES:
   Record a Welcome Message, Instruction Menu, and Directory Dialing Message (see Chapter 11).
   FOR SUBSCRIBER MAILBOXES:
   No recording is necessary.

5. Create Answering Schedule Tables using the data from step 2.
   FROM MAIN MENU:
   Select *Customize Database*, then *Answering Schedule Table*.

Note: If you change default schedules 1-4 in an AST to represent anything other than morning, afternoon, evening, and weekend hours, the prompts you hear when you do programming through the telephone will be incorrect. That is, when you press HS to listen to the Daily Department Schedules (which is the equivalent of ASTs), the prompts will be incorrect. If this is not of concern, you can change schedules 1-4.

6. Assign the Answering Schedule Table to a port or trunk:
   FROM MAIN MENU, TO ASSIGN THE ANSWERING SCHEDULE TABLE TO A PORT:
   Select *Customize Database*, then *Port Options*.
   FROM MAIN MENU, TO ASSIGN THE ANSWERING SCHEDULE TABLE TO A TRUNK MAILBOX:
   Select *Customize Database*, then *Mailbox Options*.

Note: Assign an Answering Schedule Table to a port only if NVM-202 should use that table to answer all trunks that come in on that port. Otherwise, assign the Answering Schedule Table to each trunk. Remember: A trunk's Answering Schedule Table overrides a port's.

How the Automated Attendant Provides Routing Options

To program the Automated Attendant to provide routing options to outside callers, you assign a Call Routing Mailbox to an Answering Schedule Table. All the callers would have to do is press a dialpad key (0-9,*,#) on their Touch Tone phone to route their call to an extension, to a department, etc.

The Call Routing Mailbox uses a Dial Action Table to determine exactly how a call will get routed when a caller presses a dialpad key. More specifically, the Dial Action Table assigns a routing action and number to each dialpad key. For example, you could assign the "GOTO" action and Announcement Mailbox 350 to dialpad key 4. The Dial Action Table would look like this:

Key 4 Action: GOTO
Key 4 Number: 350

Callers who press dialpad key 4 would hear the Announcement Message recorded for Announcement Mailbox 350 (e.g., the weekly business schedule).

After you set up the Dial Action Table, you record a Welcome Message and Instruction Menu for the Call Routing Mailbox. A typical Welcome Message is, ***Thank you for calling XYZ company.*** The Instruction Menu explains the routing options. The Instruction Menu for the example above should say, ***Press 4 for the weekly business schedule.***

In addition, you can use the Dial Action Table to let callers dial extension numbers and define a TIMEOUT action. NVM-202 performs the TIMEOUT action when a caller does not dial anything within a certain amount of time.

A description of the routing options you can assign to dialpad keys starts below. Programming instructions start on page 45.

Note: A Directory Dialing Mailbox also provides the routing options described on the following pages. Whenever appropriate, the descriptions will refer to a Directory Dialing Mailbox. See also *Directory Dialing Mailboxes* in Chapter 6.

➤ Screened transfer to an extension

A caller can transfer to a Subscriber, Guest, or Message Center extension by pressing one dialpad key or by dialing the extension number. If the transfer does not go through (for example, if the extension is busy), NVM-202 takes the incomplete transfer off Hold and lets the caller know their options.

More specifically, when a caller tries to transfer to an extension that has a mailbox (Guest, Subscriber, or Message Center) and the transfer does not go through, NVM-202 does these two things:

1. NVM-202 plays one of the following extension status messages: ***Extension XXX is busy.*** This also plays when the extension is in Do Not Disturb.

   Extension XXX does not answer.

How the Automated Attendant Provides Routing Options (cont'd)

➤ Screened transfer to an extension (cont'd)

Extension XXX does not exist, when the extension is not installed. NVM-202 sends the caller back to the Automated Attendant (i.e., the Instruction Menu for the Call Routing [or Directory Dialing] Mailbox that transferred the call). In this case, step 2 (below) does not apply.

Extension XXX is not available, when a Subscriber Mailbox blocks Automated Attendant transfers and does not have a Next Call Routing Mailbox. For more information on blocked Automated Attendant calls and Next Call Routing Mailboxes, see *Subscriber Mailboxes* in Chapter 6.

2. NVM-202 plays this: ***To leave a message press 1. For other options, press 2.***
   The caller can press 1 to leave a message, then:
   - Hang up.
   - Press # for the Automated Attendant (i.e., the Instruction Menu for the Call Routing [or Directory Dialing] Mailbox that transferred the call).
   - Press 0 to reroute their call (if they called a Subscriber or Message Center extension). Pressing 0 routes the caller using the Key 0 Action for the Next Call Routing Mailbox (if one is assigned to the Subscriber or Message Center Mailbox).

   Or, the caller can press 2 to return to the Automated Attendant Instruction Menu (i.e., the Instruction Menu for the Call Routing [or Directory Dialing] Mailbox that transferred the call).

   NVM-202 will handle a screened transfer differently than described in steps 1 and 2 if:
   - A name is recorded for an extension's mailbox. The name plays in the extension status message instead of the extension number.
   - The number dialed corresponds to a mailbox number without an assigned extension (see *Transfer to Mailbox* in this feature).
   - The number dialed has no corresponding mailbox. In this case, NVM-202 reroutes the call using the Answering Schedule Table assigned to the port that is handling the caller's trunk.
   - A Guest or Subscriber extension has their mailbox greeting recorded (see the User's Guide). If the greeting is on, NVM-202 does not try to transfer the call. Instead, NVM-202 plays the greeting. If the mailbox greeting is off, NVM-202 tries to transfer the call. If the call does not go through, NVM-202 plays the greeting. After the greeting plays, the caller can leave a message (if desired), then:
     - Hang up.
     - Press # for the Automated Attendant (i.e., the Instruction Menu for the Call Routing Mailbox [or Directory Dialing] that transferred the call).
     - Press 0 to reroute their call (if they called a Subscriber extension). Pressing 0 routes the caller using the Key 0 Action for the Next Call Routing Mailbox (if one is assigned to the Subscriber Mailbox).

How the Automated Attendant Provides Routing Options (cont'd)

➤ Screened transfer to an extension (cont'd)

- A Subscriber extension has Call Waiting, Call Announcing, Forced Unscreened Transfers, or a recorded Paging Message (Park/Paging string). For more information, see *Subscriber Mailboxes* in Chapter 6.

➤ Unscreened transfer to an extension

A caller can transfer to a Subscriber, Guest, or Message Center extension by pressing one dialpad key or by dialing the extension number. If the transfer does not go through (for example, when the extension is busy), telephone system programming dictates where the call goes.

More specifically, if a caller tries to transfer to an extension that has a mailbox (Guest, Subscriber, or Message Center) and the call returns to NVM-202, NVM-202 does these two things:

1. Plays one of the following extension status messages:
   Extension XXX is busy. This also plays when the extension is in Do Not Disturb.

   Extension XXX does not answer. This also plays when the extension is not installed but has a mailbox.

   Extension XXX is not available, when the Subscriber Mailbox blocks Automated Attendant transfers and does not have a Next Call Routing Mailbox. For more information on blocked Automated Attendant calls and Next Call Routing Mailboxes, see *Subscriber Mailboxes* in Chapter 6.

2. NVM-202 plays this: ***To leave a message press 1. For other options, press 2.***
   The caller can press 1 to leave a message, then:
   - Hang up.
   - Press # for the Automated Attendant (i.e., the Instruction Menu for the Call Routing [or Directory Dialing] Mailbox that transferred the call).
   - Press 0 to reroute their call (if they called a Subscriber or Message Center extension). Pressing 0 routes the caller using the Key 0 Action for the Next Call Routing Mailbox (if one is assigned to the Subscriber or Message Center Mailbox)

   Or, the caller can press 2 to return to the Automated Attendant (i.e., the Instruction Menu for the Call Routing [or Directory Dialing] Mailbox that transferred the call).

NVM-202 will handle an unscreened transfer differently than described in steps 1 and 2 if:

If a name is recorded for an extension's mailbox, the name plays in the extension status message instead of the extension number.

- The dialed number corresponds to a mailbox number that does not have an extension (see *Transfer to Mailbox* in this feature).
- The dialed number has no corresponding mailbox. In this case, NVM-202 reroutes the call using the Answering Schedule Table assigned to the port that is handling the caller's trunk.

How the Automated Attendant Provides Routing Options (cont'd)

➤ Unscreened transfer to an extension

NVM-202 will handle an unscreened transfer differently than described in steps 1 and 2 if (cont'd):

- A Guest or Subscriber extension has their mailbox greeting recorded (see the User's Guide). If the greeting is on, NVM-202 does not try to transfer the call. Instead, NVM-202 immediately plays the greeting. If the mailbox greeting is off, NVM-202 still tries to transfer the call. If the call does not go through, NVM-202 plays the greeting. After the greeting plays, the caller can leave a message, then:
  - Hang up.
  - Press # for the Automated Attendant (i.e., the Instruction Menu for the Call Routing [or Directory Dialing] Mailbox that transferred the call).
  - Press 0 to reroute their call (if they called a Subscriber extension). Pressing 0 routes the caller using the Key 0 Action for the Subscriber's Next Call Routing Mailbox.
- A Subscriber extension has Call Waiting enabled. See also *Subscriber Mailboxes (Call Waiting string)* in Chapter 6.

➤ Transfer to Mailbox

This routing option lets you expand the use of a dialpad key that is set up for screened or unscreened transfers. A "Transfer" dialpad key will transfer a caller to a mailbox as long as:

- The mailbox does not have an extension assigned to it
- The mailbox number begins with the same digit as the extension numbers in the phone system

For example, suppose key 3 is set up for screened transfers to extensions. Dialing 3XX would send a caller to mailbox 3XX (not extension 3XX) as long as mailbox 3XX does not have an assigned extension.

Transfer to Mailbox applies to Call Routing, Message Center, Subscriber, Guest, Announcement, and Directory Dialing Mailboxes. When NVM-202 transfers a caller to a Guest or Subscriber Mailbox that does not have an extension, the callers hears: ***At the tone you can leave a message*** or the mailbox greeting (if recorded). The caller can leave a message in that mailbox (if desired), then:

- Hang up.
- Press # for the Automated Attendant (i.e., the Instruction Menu for the Call Routing [or Directory Dialing] Mailbox that transferred the call).
- Press 0 to reroute their call (if they left a message in a Subscriber or Message Center Mailbox). Pressing 0 routes the caller using the Key 0 Action for the Next Call Routing Mailbox (if one is assigned to the Subscriber or Message Center Mailbox).

When NVM-202 transfers a caller to a Message Center, Call Routing, Announcement, or Directory Dialing Mailbox, NVM-202 plays the recorded message for that mailbox. For information on these mailboxes, see Chapter 6. For more flexible routing to a mailbox, see *Route to Mailbox* in this feature.

How the Automated Attendant Provides Routing Options (cont'd)

➤ Route to an Extension Number Directory

You can record a directory that lists the Subscribers and their extension numbers to assist outside callers in reaching the desired party. The caller can dial the desired extension any time during the listing to transfer to the extension. The way the transfer is handled depends on whether it is a screened or unscreened transfer (see previous pages).

➤ Route to Extension Name Directory

The caller can make a screened or unscreened transfer to a Subscriber, Message Center, or Guest extension by dialing the name programmed for that extension's mailbox. For instance, dialing ALEX will transfer a caller to an extension whose mailbox has the name ALEX. You can program first- or last-name dialing. If you program last-name dialing, for example, callers would reach a person by dialing their last name first. You can also allow or deny the name-dialing of certain extensions or mailboxes. To do this, you use the *Directory List to use* option of the Call Routing Mailbox and the *Directory List* option of the mailbox or extension to be called.

Below are the specifics for how an Extension Name Directory works:

When a caller presses the dialpad key that is set up for an Extension Name Directory, NVM-202 plays this Directory Dialing Message: ***Please enter ____ or more letters of the person's name, starting with their last (first) name, then press the pound key. To enter a Q or Z, press 1. To exit this directory, press only the pound key.*** The number that goes in the blank is programmable. In addition, the Directory Dialing message is programmable. That is, you can re-record it.

When the caller dials a valid name and presses the pound key, NVM-202 says, ***Calling (full name), extension XXX*** then transfers the call. If the caller forgets to press the pound key, NVM-202 waits for a programmed time, then transfers the call anyway. If the letters dialed identify more than one person, NVM-202 says: ***For person A, dial ___. For person B, dial ___***, where ***person A*** and ***person B*** are the recorded names for each extension's mailbox.

NVM-202 does not complete a name-dialed call if:

- Name-dialing that extension is not allowed or the name does not exist. NVM-202 says, ***That name is not listed in the directory.***, then returns the caller to the Directory Dialing Message.
- The caller presses only the pound key. This returns the caller to the Instruction Menu for the Call Routing Mailbox.
- The caller does not dial the minimum number of letters stated in the voice prompt. NVM-202 says, ***You have not entered enough letters.***, then returns the caller to the Directory Dialing Message.

Callers can also use an Extension Name Directory to name-dial a mailbox if that mailbox meets certain criteria. See *Transfer to a Mailbox* in this feature.

Name-dialing is also available from a Directory Dialing Mailbox. Callers can name-dial without having to first press the key assigned to the Name Directory. See *Directory Dialing Mailboxes* in Chapter 6.

How the Automated Attendant Provides Routing Options (cont'd)

➤ Route to Quick Message

The caller can leave a message in a Subscriber or Guest mailbox by dialing the single-digit Quick Message code, then the Subscriber or Guest extension number.

When the caller leaves a Quick Message, NVM-202 plays, ***At the tone you can leave a message for (extension, mailbox, or name).***, or the mailbox greeting. After leaving the message, the caller can:

- Hang up.
- Press # for the Automated Attendant (i.e., the Instruction Menu for the Call Routing [or Directory Dialing] Mailbox that handled the call).
- Press 0 to reroute their call (if they left a message in a Subscriber Mailbox). Pressing 0 routes the caller using the Key 0 Action for the Next Call Routing Mailbox (if one is assigned to the Subscriber Mailbox).

➤ Route to Voice Mail

The caller can press a dialpad key, then their mailbox number to access their mailbox and the entire Voice Mail system.

➤ Route to "Hang up"

When the caller dials the "hang up" digit, NVM-202 says ***Goodbye*** and hangs up.

➤ Undefined Routing

When the caller dials the "Undefined Routing" digit, NVM-202 says, ***That is an invalid entry. Please try again.***

➤ Route to a Mailbox (Call Routing, Message Center, Subscriber, Guest, Announcement, Directory Dialing)

The caller can reach these mailboxes by pressing one dialpad key or by dialing the mailbox number.

- With routing to a **Call Routing Mailbox**, the caller hears the Welcome Message and Instruction Menu and can dial a code to route their call.
- With routing to a **Message Center Mailbox**, the caller hears the Welcome Message, a beep, and can then leave a message.
- With routing to a **Subscriber/Guest Mailbox**, the caller enters the mailbox and can listen to its messages and use Voice Mail.
- With routing to an **Announcement Mailbox**, the caller hears the recorded Announcement Message (e.g., movie schedule). Then NVM-202 hangs up or sends the caller to the Automated Attendant (Instruction Menu).
- With routing to a **Directory Dialing Mailbox**, the caller hears the Directory Dialing Message and can dial letters to reach an extension or mailbox.

See also *Transfer to a Mailbox* in this feature.

How the Automated Attendant Provides Routing Options (cont'd)

By default, Answering Schedule Tables (AST) 1-4 use Call Routing Mailboxes. The Call Routing Mailbox and Dial Action Table Assignments are shown below. By default, NVM-202 uses AST 1 to answer all calls. For more information on ASTs, see pages 35 and 127.

AST 1:			AST 2:		
1. Morn	CR 411	DAT 1	1. Morn	CR 421	DAT 1
2. Aft	CR 412	DAT 1	2. Aft	CR 422	DAT 1
3. Eve	CR 413	DAT 2	3. Eve	CR 423	DAT 2
4. Wkend	CR 414	DAT 2	4. Wkend	CR 424	DAT 2
AST 3:			**AST 4:**		
1. Morn	CR 431	DAT 1	1. Morn	CR 441	DAT 1
2. Aft	CR 432	DAT 1	2. Aft	CR 442	DAT 1
3. Eve	CR 433	DAT 2	3. Eve	CR 443	DAT 2
4. Wkend	CR 434	DAT 2	4. Wkend	CR 444	DAT 2

The default call routing options for all Dial Action Tables are as follows:

Key 0	Screened transfer to extension 300
Keys 1-2	Undefined
Key 3	Screened transfer to XXX (this lets a caller dial any extension that begins with the digit 3 to transfer to that extension)
Key 4-8	Undefined
Key 9	Hang up
Key *	Quick Message
Key #	Log on to Voice Mail
TIMEOUT	Screened transfer to extension 300

Note: If, for example, the extension numbers start with 2, then NVM-202 sets up key 2 for screened transfer to XXX instead of key 3.

How the Automated Attendant Provides Routing Options (cont'd)

To program (customize) the routing options for the NVM-202 Automated Attendant:

1. Create a Call Routing Mailbox (e.g., AAA) and assign to it a Dial Action Table (e.g., B).
   FROM MAIN MENU:
   Select *Customize Database*, then *Mailbox Options*.

2. Assign Call Routing Mailbox AAA to an Answering Schedule Table.
   FROM MAIN MENU:
   Select *Customize Database*, then *Answering Schedule Table*.

   See also *How the Automated Attendant Answers Calls* in this chapter.

3. Set up Dial Action Table B with the desired routing options.
   FROM MAIN MENU:
   Select *Customize Database*, then *Dial Action Table*.

   See below (***Programming For Each Routing Option***) for the entries you must make in the Dial Action Table and for other required programming or recording.

4. Record a Welcome Message and Instruction Menu for Call Routing Mailbox AAA (see Chapter 11).

Programming For Each Routing Option

To program screened transfer to an extension:

USING CUSTOMIZE DATABASE MENU, MAILBOX OPTIONS
Make sure that each extension has a mailbox number

IN DIAL ACTION TABLE, TO ALLOW SINGLE-DIGIT ACCESS TO A SPECIFIC EXTENSION:
Key Action - TRF
Key Number - Extension number

IN DIAL ACTION TABLE, TO ALLOW CALLER TO DIAL EXTENSION NUMBERS THAT BEGIN WITH "C"
Key Action C - TRF
Key Number C - XXX

USING CUSTOMIZE DATABASE MENU, SYSTEM OPTIONS
Set the Hold retrieval string so that NVM-202 can take an incomplete screened transfer off Hold

USING SYSTEM ADMINISTRATOR OPTIONS (CHAPTER 11):
Record a name for each Subscriber, Guest, and Message Mailbox so the name plays in the extension status messages

How the Automated Attendant Provides Routing Options (cont'd)

Programming For Each Routing Option (cont'd)

See also page 45, steps 1-4.

To program screened transfer to an extension (cont'd):

USING CUSTOMIZE DATABASE MENU, MAILBOX OPTIONS:

Block Auto Attendant transfers to Subscriber Mailboxes, if desired. Assign a Next Call Routing Mailbox to a Subscriber Mailbox and/or Message Center Mailbox, if desired

Customize the *Rings before redirect trf* option for the Call Routing Mailbox (this is the number of times a screened transfer rings an extension before NVM-202 says: ***To leave a message press 1. For other options, press 2***).

To program unscreened transfer to an extension:

USING CUSTOMIZE DATABASE MENU, MAILBOX OPTIONS

Make sure that each extension has a mailbox number

IN DIAL ACTION TABLE, TO ALLOW SINGLE-DIGIT ACCESS TO A SPECIFIC EXTENSION:

Key Action - UTRF
Key Number - Extension number

IN DIAL ACTION TABLE, TO LET THE CALLER DIAL EXTENSION NUMBERS THAT BEGIN WITH "C":

Key Action C - UTRF
Key Number C - XXX

USING SYSTEM ADMINISTRATOR OPTIONS (CHAPTER 11):

Record a name for each Subscriber, Guest, and Message Center Mailbox (the name plays in the extension status messages)

USING CUSTOMIZE DATABASE MENU, MAILBOX OPTIONS:

Block Automated Attendant transfers to a Subscriber Mailbox, if desired. Assign a Next Call Routing Mailbox to a Subscriber Mailbox or Message Center Mailbox, if desired

To program transfer to a mailbox:

USE CUSTOMIZE DATABASE MENU, MAILBOX OPTIONS:

Create mailboxes. The mailbox numbers must begin with the same digit as the extensions. Do not assign an extension number to a Subscriber, Guest, or Message Center Mailbox.

IN DIAL ACTION TABLE, TO ALLOW SINGLE-DIGIT ACCESS TO A SPECIFIC MAILBOX:

Key Action - TRF or UTRF
Key Number - Mailbox Number

IN DIAL ACTION TABLE, TO ALLOW CALLER TO DIAL MAILBOX (AND EXTENSION) NUMBERS THAT BEGIN WITH "C":

Key Action C - TRF or UTRF
Key Number C - XXX

How the Automated Attendant Provides Routing Options (cont'd)

Programming For Each Routing Option (cont'd)

See also page 45, steps 1-4.

To program routing to an Extension Directory:

USING CUSTOMIZE DATABASE MENU, MAILBOX OPTIONS :

Create another Call Routing Mailbox (e.g, YYY). Assign it a Dial Action Table (e.g., Z).

USING CUSTOMIZE DATABASE MENU, DIAL ACTION TABLE:

Create Dial Action Table Z. If the extension numbers to be called begin with "C," make this entry in Dial Action Table Z:
Key Action C - TRF or UTRF
Key Number C - XXX

IN DIAL ACTION TABLE "B" FOR THE ORIGINAL CALL ROUTING MAILBOX "AAA", (SEE PAGE 45):

Key Action - GOTO
Key Number - YYY

USING SYSTEM ADMINISTRATOR OPTIONS (CHAPTER 11):

Record a Welcome Message and Instruction Menu for Call Routing mailbox YYY. For example: ***This is the extension directory. For John Smith, dial 303,*** **etc.**

To program routing to an Extension Name Directory:

IN DIAL ACTION TABLE, TO SET UP ROUTING TO THE EXTENSION NAME DIRECTORY:

Key Action - DIRL or DIRF (for last/first name directory)
Key Number - N

IN DIAL ACTION TABLE, TO ALLOW TRANSFERS TO THE EXTENSIONS THAT BEGIN WITH THE NUMBER "C":

Key Action C - TRF or UTRF
Key Number C - XXX

USING SYSTEM ADMINISTRATOR OPTIONS (CHAPTER 11):

Record a name for Subscriber, Guest, or Message Center Mailboxes

USING CUSTOMIZE DATABASE MENU, MAILBOX OPTIONS:

Enter a name for each Subscriber, Guest, or Message Center Mailbox. For a last-name (first-name) directory, enter the last (first) name first.

USING THE CUSTOMIZE DATABASE MENU, SYSTEM OPTIONS:

For *Min entry for Directory Dialing*: Enter the minimum number of letters a caller must dial

USING THE SYSTEM ADMINISTRATOR OPTIONS (CHAPTER 11):

Record a customized Directory Dialing Message, if desired

How the Automated Attendant Provides Routing Options (cont'd)

Programming For Each Routing Option (cont'd)

See also page 45, steps 1-4.

To program routing to Quick Message feature:

IN DIAL ACTION TABLE:

Key Action - REC
Key Number - IXXX

USING CUSTOMIZE DATABASE MENU, SYSTEM OPTIONS

Enable/disable *Greeting for quick msg/mailbox trf*

To program routing to Voice Mail:

IN DIAL ACTION TABLE:

Key Action - LOGON
Key Number - N

To program routing to Hang Up or Undefined Routing

IN DIAL ACTION TABLE:

Key Action - HUP for Hang Up or UND for Undefined
Key Number - N

To program routing to another Call Routing Mailbox (e.g., YYY):

USING CUSTOMIZE DATABASE MENU, MAILBOX OPTIONS :

Create a Call Routing Mailbox YYY. Assign to it a Dial Action Table (Z).

USING CUSTOMIZE DATABASE MENU, DIAL ACTION TABLE:

Create Dial Action Table Z

IN DIAL ACTION TABLE "B" FOR THE ORIGINAL CALL ROUTING MAILBOX "AAA", (SEE PAGE 45), MAKE THESE ENTRIES TO LET A CALLER PRESS ONE DIALPAD KEY TO REACH CALL ROUTING MAILBOX YYY:

Key Action - GOTO
Key Number - YYY

IN DIAL ACTION TABLE "B" FOR THE ORIGINAL CALL ROUTING MAILBOX "AAA", (SEE PAGE 45), MAKE THESE ENTRIES TO LET A CALLER DIAL ANY CALL ROUTING MAILBOX NUMBER THAT BEGINS WITH C:

Key Action C - GOTO
Key Number C - XXX

USING SYSTEM ADMINISTRATOR OPTIONS (CHAPTER 11):

Record a Welcome Message and Instruction Menu for Call Routing Mailbox YYY

How the Automated Attendant Provides Routing Options (cont'd)

Programming For Each Routing Option (cont'd)

See also page 45, steps 1-4.

To program routing to a Message Center, Subscriber, Guest, Announcement, or Directory Dialing Mailbox:

USING CUSTOMIZE DATABASE MENU, MAILBOX OPTIONS:

Create and customize the mailbox

For more information on these mailboxes and their related programming, see Chapter 6.

IN DIAL ACTION TABLE, TO LET THE CALLER PRESS ONE DIALPAD KEY TO CALL A SPECIFIC MAILBOX:

Key Action - GOTO
Key Number - Mailbox number

IN DIAL ACTION TABLE, TO LET THE CALLER DIAL ANY MAILBOX THAT BEGINS WITH THE NUMBER "C"

Key Action C - GOTO
Key Number C - XXX

USING SYSTEM ADMINISTRATOR OPTIONS (CHAPTER 11):

Record a Welcome Message for a Message Center Mailbox

No recording is necessary for a Subscriber/Guest Mailbox

Record an Announcement Message for an Announcement Mailbox

Record a Directory Dialing Message for the Directory Dialing Mailbox

How the Automated Attendant Handles Calls: A Flowchart Summary

The flowchart below shows how the NVM-202 Automated Attendant answers and routes a trunk (outside) call. The flowchart assumes:

- The trunk is assigned to Voice Mail (VM) in telephone system programming.
- The trunk has a Trunk Mailbox (see Chapter 6).

For detailed information on how the NVM-202 Automated Attendant answers and routes a trunk (outside) call, see *How the Automated Attendant Answers Calls* and *How the Automated Attendant Provides Routing Options* in this chapter.

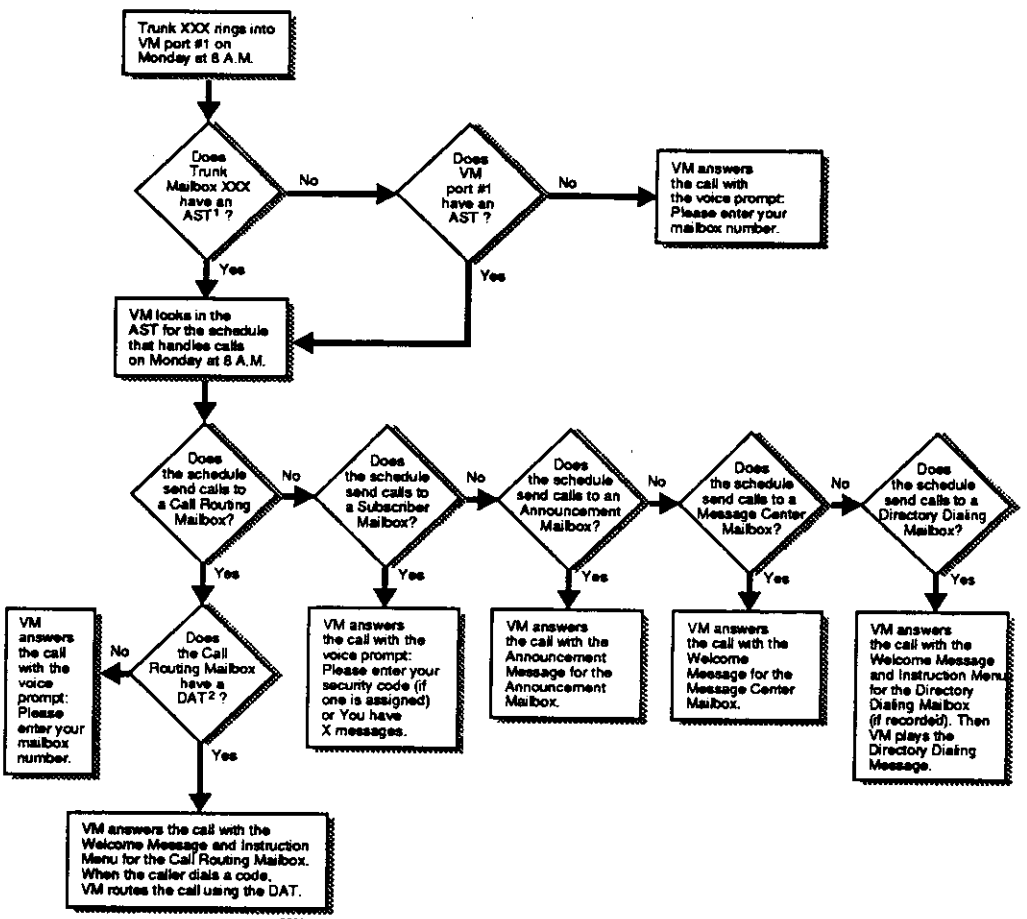

[1] AST = Answering Schedule Table

[2] DAT = Dial Action Table

Chapter 5

Customizing System and Port Options

System Options 53
- Site ID 53
- System password 53
- Time limit for mailbox logon 53
- Limit on mailbox logon attempts 54
- Daily maintenance time 54
- Silence limit for recording 55
- Mailbox Default Security Code 55
- Time limit for dialing commands 55
- Limit on dialing command attempts 55
- Subscriber msg length 56
- Nonsubscriber msg length 56
- Greeting for quick msg/mailbox trf 56
- Hold retrieval string 56
- Ringdown string 57
- Min entry for Directory Dialing 57
- Eliminate recording silence 57
- Flash timer 57
- Wait for first protocol digit 58
- Wait for subsequent protocol digits 58
- Wait for last protocol digit 58

Port Options 59
- In Service 59
- Allow Msg Notification & Lamp callouts 59
- Extension 60
- Answering Schedule Table 60

System Options

The System Options are options you can customize for the entire NVM-202 system.

To access System Options from the MAIN Menu:

1. Press CU, then press Enter.
2. Type the password, if the system asks for it, then press Enter.
3. When you see the CUSTOMIZE DATABASE Menu (below): Press SO, then press Enter. Customize the options.

```
******* CUSTOMIZE DATABASE Menu *******

Press command below,                To customize:
then press Enter:

    SO                              System Options
    PO                              Port Options
    MO, space, mailbox # or #-#     Mailbox Options
    AST                             Answering Schedule Table
    DAT                             Dial Action Table
    NO                              Message Notification Options
    DL, space, list #, space, A or  Distribution Lists
      D (to add/delete mailbox)
    E                               To exit to MAIN Menu

> After you select a     - Enter new data, then press Enter or Tab. Or
  command, you can       - Press Enter to move forward with no changes. Or,
  customize the          - Press Tab to move backward with no changes. Or,
  database as follows:   - Press Esc to exit.

> For help on using the "Help" command: Press H, space, H, Enter
```

About the Options

➤ Site ID

This is the name of the NVM-202 installation site.

DEFAULT: None
ENTRIES: Up to 25 characters, including blanks and punctuation

➤ System password

This is the password you enter after you select any item on the MAIN Menu (except the item, *View/Print Reports*).

DEFAULT: CTL (all upper case letters)
ENTRIES: Up to 6 characters (upper or lower case make a difference)

➤ Time limit for mailbox logon

When a person tries to call (log on to) a mailbox, this option determines how long NVM-202 waits for the person to dial a valid mailbox number and/or security code before repeating the prompts, ***Please enter your mailbox number (security code).*** For instructions on calling a mailbox, see the User's Guide.

DEFAULT: 5 seconds
ENTRIES: 1-99 seconds

System Options (cont'd)

About the Options

➤ Limit on mailbox logon attempts

When a person tries to call (log on to) a mailbox, this option determines how many chances a person has to enter a valid mailbox number and/or security code before NVM-202 says ***Goodbye*** and disconnects them. For instructions on calling a mailbox, see the User's Guide.

DEFAULT: 3 times
ENTRIES: 1-99 times

➤ Daily maintenance time

This is the time of day that NVM-202 automatically shuts down to perform maintenance tasks on its hard disk. NVM-202 can perform two types of maintenance tasks:

- **Daily Maintenance** checks and corrects hardware disk errors. This occurs once a day at the programmed time.
- **Weekly Maintenance** defragments the disk files to optimize call processing time. This occurs once a week on the programmed day and time.

No one can use NVM-202 while the maintenance tasks are taking place. When they are complete, NVM-202 restarts and you see the MAIN Menu on the terminal.

If the programmed maintenance time arrives and an NVM-202 port is busy, NVM-202 waits 5 minutes. If any port is still busy at the end of 5 minutes, NVM-202 skips the maintenance tasks.

DEFAULT: None
ENTRIES: HH:MM
N - None (no daily or weekly maintenance)

HH = hour (00-23)
MM = minutes (00-59)

Day to run full disk maintenance

This option lets you select the day that weekly maintenance (disk defragmentation) should occur.

DEFAULT: None
ENTRIES: Su-Sa (for example, Fr = Friday)
N - None (no disk defragmentation)

You can set the daily maintenance time/day or manually run the disk defragmentation using the MAINTENANCE Menu (see Chapter 10).

System Options (cont'd)

About the Options

➤ **Silence limit for recording**

This is the amount of time a person can be silent while recording before NVM-202 pauses the recording and says: ***Recording has been paused due to silence.***

To have NVM-202 eliminate the silence, see these System Options: *Eliminate recording silence* and *Delay before eliminating silence.*

DEFAULT: 5 seconds
ENTRIES: 1-25 seconds

➤ **Mailbox Default Security Code**

This Mailbox Default Security Code gets assigned to all Subscriber Mailboxes you manually create after you start up the system for the first time (or after you re-install it). To call (log on to) their mailbox for the first time, a Subscriber must dial the Mailbox Default Security Code (see *Calling Your Subscriber Mailbox* in the User's Guide). Once logged on, the Subscriber can change the Security Code (see *Changing Your Security Code* in the User's Guide).

DEFAULT: The Mailbox Default Security Code assigned during installation
ENTRIES: Up to 6 digits (0-9)

➤ **Time limit for dialing commands**

When NVM-202 plays an instructional voice prompt (e.g., ***Enter your new security code***), this option determines how long NVM-202 waits for the caller to dial something. If the caller does not dial anything within the time limit, NVM-202 replays the voice prompt.

This option applies to all instructional voice prompts except, ***Please enter your mailbox number*** and ***Please enter your security code***. The time limit for these two commands is governed by *Time limit for mailbox logon* (page 53).

DEFAULT: 5 seconds
ENTRIES: 1-99 seconds

➤ **Limit on dialing command attempts**

When NVM-202 plays an instructional voice prompt (e.g., ***Enter your new security code***), this option determines the number of chances a person has to enter a valid code before NVM-202 says ***Goodbye*** and disconnects them.

This option applies to all instructional voice prompts except, ***Please enter your mailbox number*** and ***Please enter your security code***. The limit for these two commands is governed by *Limit on mailbox logon attempts* (page 54).

DEFAULT: 3 times
ENTRIES: 1-99 times

System Options (cont'd)

About the Options

➤ **Subscriber msg length**

This is the maximum length for a message that an internal caller leaves in a mailbox and for any recording a person makes after calling (logging on to) a mailbox (for example, mailbox greeting, Welcome Message, etc). The *Subscriber message length* does not apply to mailbox names. The maximum length for mailbox names is 10 seconds.

DEFAULT: 120 seconds
ENTRIES: 2-999 seconds

➤ **Nonsubscriber msg length**

This is the maximum length for a message that an outside caller leaves in a mailbox.

DEFAULT: 120 seconds
ENTRIES: 2-999 seconds

➤ **Greeting for qck msg/mailbox trf**

This option determines whether a mailbox's greeting will play when an outside caller leaves a Quick Message in that mailbox. For more information on Quick Message, see *How the Automated Attendant Provides Routing Options* in Chapter 4.

Note: If this option is enabled, the mailbox greeting will play as long as it is recorded; it does not have to be turned on.

DEFAULT: Y
ENTRIES: Y - Yes
N - No

➤ **Hold retrieval string**

This string of codes takes an incomplete Automated Attendant screened transfer off Hold so the Automated Attendant can further process the call. For information on screened transfers, see *How the Automated Attendant Provides Routing Options* in Chapter 4.

DEFAULT: FPW*7
ENTRIES: Up to 20 digits (Use the string your phone system uses to take a call off of Hold)
F - Flash (see also ***Related Programming***)
W - Wait for dial tone
S - Wait for any type of sound
P - Pause (202 pauses 2 seconds, dials next digit)
M - Monitored pause (202 pauses 2 seconds, dials next digit only if no busy/reorder tone. If busy/reorder tone exists after pause, 202 terminates the call.)

System Options (cont'd)

About the Options

➤ Ringdown string

This is the string that NVM-202 must dial in order for Call Announcing to work correctly. This string must match the programmed *Ringdown string* in the telephone system.

DEFAULT: 1
ENTRIES: Up to 10 digits
N - None
F - Flash (see also ***Related Programming***)
W - Wait for dial tone
S - Wait for any type of sound
P - Pause (202 pauses 2 seconds, dials next digit)
M - Monitored pause (202 pauses 2 seconds, dials next digit only if no busy/reorder tone. If busy/reorder tone exists after pause, 202 terminates the call.)

➤ Min entry for Directory Dialing

This is the minimum number of letters a caller must dial when using a Directory Dialing Mailbox or an Extension Name Directory. For more information on Directory Dialing Mailboxes, see Chapter 6. For more information on an Extension Name Directory, see *How the Automated Attendant Provides Routing Options* in Chapter 4.

DEFAULT: 4 letters
ENTRIES: 3-10 letters

➤ Eliminate recording silence

This option lets NVM-202 eliminate (erase) silence from a recording. See also *Delay before eliminating silence* below.

DEFAULT: N
ENTRIES: Y - Yes
N - No

Delay before eliminating silence

When *Eliminate recording silence* is enabled, this delay time is the amount of silence NVM-202 leaves in a silent interval.

DEFAULT: 75 (1.2 sec)
ENTRIES: 15-999 (1 = 16ms)

➤ Flash timer

This is the length of a Flash. To have a new value take effect, you must shut down the system, then reset it. To shut down the system, use the MAINTENANCE Menu (see Chapter 10) or the PD command on the System Administrator Menu (see Chapter 11). To reset the system, press the Reset button on the NVM-202 cabinet. All calls in progress will be disconnected.

DEFAULT: 50 (.50 sec)
ENTRIES: 1-999 (1 = 10ms)

System Options (cont'd)

About the Options

➤ **Wait for first protocol digit**

When a call comes from the telephone system to an NVM-202 port, this wait time is how long NVM-202 waits for the first digit of the call's protocol string. If NVM-202 does not receive the first digit within this wait time, NVM-202 handles the call using the Answering Schedule Table assigned to the call's port. This wait time is determined by the telephone system. The default value below should be OK for most cases.

DEFAULT: 3 sec
ENTRIES: 0-99 sec

➤ **Wait for subsequent protocol digits**

After NVM-202 receives the first digit of a call's protocol string (see above), this wait time is how long NVM-202 waits for each subsequent digit. If NVM-202 does not receive each subsequent digit within this wait time, NVM-202 handles the call using the Answering Schedule Table assigned to the call's port. This wait time is determined by the telephone system. The default value below should be OK for most cases.

DEFAULT: 3 sec
ENTRIES: 0-99 sec

➤ **Wait after last protocol digit**

After NVM-202 receives the last digit of a call's protocol string (see previous options), this wait time is how long NVM-202 waits for the "Hang Up" string. If NVM-202 does not receive the "Hang Up" string within this wait time, NVM-202 handles the call in the way designated for that protocol string. This wait time is determined by the telephone system. The default value below should be OK for most cases.

DEFAULT: 1 sec
ENTRIES: 0-99 sec

Related Programming

For Hold Retrieval string:

Use CUSTOMIZE DATABASE Menu, System Options

To set the duration of the Flash (if you must enter one in the Hold Retrieval string)

Port Options

The Port Options let you customize each Voice Mail port.

To access Port Options from the MAIN Menu:

1. Press CU, then press Enter.
2. Type the password, if the system asks for it, then press Enter.
3. When you see the CUSTOMIZE DATABASE Menu (below): Press PO, then press Enter. Customize the options.

```
******* CUSTOMIZE DATABASE Menu *******

Press command below,          To customize:
then press Enter:

    SO                        System Options
    PO                        Port Options
    MO, space, mailbox # or #-#  Mailbox Options
    AST                       Answering Schedule Table
    DAT                       Dial Action Table
    NO                        Message Notification Options
    DL, space, list #, space, A or  Distribution Lists
      D (to add/delete mailbox)
    E                         To exit to MAIN Menu

> After you select a    - Enter new data, then press Enter or Tab. Or
  command, you can      - Press Enter to move forward with no changes. Or,
  customize the         - Press Tab to move backward with no changes. Or,
  database as follows:  - Press Esc to exit.

> For help on using the "Help" command: Press H, space, H, Enter
```

About the Options

➤ In Service

This option lets you take a port in or out of service (you can also do this using the *Maintenance* item on the MAIN Menu).

DEFAULT: Each installed port is in service
ENTRIES: Y - Yes (In Service)
N - No (Out of Service)

➤ Allow Msg Notification & Lamp callouts

This option lets NVM-202 use the port for Message Notification callouts (calls) and Message Waiting Lamp callouts (updates). You must enable this option for at least one port.

See also *Extension* (next page) and the heading ***Related Programming***.

DEFAULT: Y for Port 1
N for Ports 2 and 3
ENTRIES: Y - Yes
N - No

Port Options (cont'd)

About the Options

➤ **Extension**

This is the keyset extension that is physically connected to the port. Remember: The RJ11 line labeled L1 is connected to Port 1 and L2 is connected to Port 2. See *Connecting NVM-202 to your Telephone System* in Chapter 1.

If you do not assign an extension number to the port, Message Notification and Call Announcing features may not work correctly.

DEFAULT: None
ENTRIES: Extension numbers dedicated to Voice Mail
N - None

➤ **Answering Schedule Table**

This is the Answering Schedule Table (AST) that NVM-202 uses to answer all trunks that use the port.

See also the heading ***Related Programming***.

DEFAULT: 1
ENTRIES: 1-16
N - None

Note: Use these guidelines when assigning ASTs to ports or trunks:

- If the customer wants all trunks answered by the same AST: Assign the AST to each port. Do not assign an AST to any trunk.
- If the customer does not want all trunks answered by the same AST: Assign an AST to each trunk (see *Trunk Mailboxes* in Chapter 6). NVM-202 ignores the port's AST, if any.

Related Programming

For Allow Msg Notification and Lamp callouts:

Use CUSTOMIZE DATABASE Menu, Mailbox Options

To enable the Message Waiting Lamp and Message Notification for a mailbox

Use CUSTOMIZE DATABASE Menu, Message Notification Options

To customize the way Message Notification calls are sent

Use Message Notification in the User's Guide

For a description of Message Notification, to turn Message Notification on/off, and to set up the notification schedule, mode, and number

For Answering Schedule Table:

Use CUSTOMIZE DATABASE Menu, Answering Schedule Table

To set up the Answering Schedule Table

Chapter 6

Customizing Mailbox Options

The Default Mailbox Numbering Plan....63
Creating or Re-assigning a Mailbox....64
Deleting a Mailbox....65
Call Routing Mailboxes....66
- Type....67
- Name....68
- Department....68
- Dial Action Table....68
- Rings before redirect trf....69
- Directory List....69
- Directory List to use....70

Subscriber Mailboxes....71
- Type....72
- Security Code....72
- Name....72
- Department....73
- Extension....73
- Msg Wait Lamp....73
- Next Call Routing mailbox....74
- Block Auto att....75
- System Admin....75
- Msg Notification....75
- Number of msg....77
- Msg playback FIFO/LIFO....77
- Directory List....77
- Forced unscreened transfer....78
- Park/Paging string....78
- Call Waiting string....80
- Call Announcing....82
- Auto erase/save of messages....83
- Message retention....84
- Recording conversation beep....84

Trunk Mailboxes....87
- Type....87
- Name....88
- Department....88
- Extension....88
- Answering Schedule Table....88
- Directory List....88

Message Center Mailboxes....89
- Type....90
- Security Code....91
- Name....91
- Department....91
- Extension....91
- Msg Wait Lamp....92
- Next Call Routing mailbox....92
- Msg Notification....93
- Number of msg....94
- Msg playback FIFO/LIFO....95
- Directory List....95
- Forced unscreened transfer....95
- Auto erase/save of messages....96

Customizing Mailbox Options (cont'd)

Message Center Mailboxes (cont'd)
- Message retention....96
- Recording conversation beep....96

Guest Mailboxes....99
- Type....100
- Security Code....100
- Name....100
- Department....101
- Extension....101
- Msg Wait Lamp....101
- Msg Notification....102
- Number of msg....104
- Record reply only....104
- Msg playback FIFO/LIFO....104
- Directory List....104
- Forced unscreened transfer....105
- Auto erase/save of messages....105
- Message retention....105
- Recording conversation beep....105

Distribution Mailboxes....107
- Type....107
- Name....108
- Department....108
- Distribution List....109
- Directory List....108

Announcement Mailboxes....109
- Type....110
- Security....110
- Name....110
- Department....111
- Play announcement....111
- Hang up after announcement....111
- Directory List....111

ACD Announcement Mailboxes....113
- Type....114
- Name....114
- Department....114
- Directory List....114

Directory Dialing Mailboxes....115
- Type....118
- Name....118
- Department....118
- Dial Action Table....118
- Rings before redirect transfer....119
- Directory List....119
- Directory List to use....120

Future Delivery Mailboxes....121
- Type....122
- Security Code....122
- Name....122
- Department....122
- Number of msg....123
- Directory List....123

The Default Mailbox Numbering Plan

The chart belows shows the default mailbox numbering plan. To change the numbering plan, see *Creating or Re-assigning a Mailbox* in this chapter.

Mailbox Type		Mailbox Numbers			
Subscriber		300-347 (1- or 2- Cabinet) 300-371 (3-Cabinet)			
Trunk		348-363 (1- or 2- Cabinet) 372-395 (3-Cabinet)			
Future Delivery		399			
Announcement		400-409			
Call Routing for for Answering Schedule Override feature		410			
Call Routing for for Answering Schedule Tables (AST)		**AST 1**	**AST 2**	**AST 3**	**AST 4**
	Morn:	411	421	431	441
	Aft:	412	422	432	442
	Eve:	413	423	433	443
	Wkend:	414	424	434	444
Message Center		**AST 1**	**AST 2**	**AST 3**	**AST 4**
		415	425	435	445
		416	426	436	446
		417	427	437	447
		418	428	438	448
Guest		**AST 1**	**AST 2**	**AST 3**	**AST 4**
		419	429	439	449
		420	430	440	
Distribution		450-459			
Not Assigned		364-398 (1- or 2-Cabinet) 396-398 (3-Cabinet) 460-499			

Notes: (1) If you use the installation procedure (in Chapter 2) to install Subscriber and/or Trunk Mailboxes for numbers between 399 and 499, NVM-202 changes the default numbering plan. NVM-202 renumbers default mailboxes 399-499 as 799-899 respectively. For example: Future Delivery Mailbox 399 would be renumbered as 799. If you install Subscriber and/or Trunk Mailboxes for 399-499 **and** 799-899, NVM-202 renumbers mailboxes 399-499 as 599-699. (2) For more information on the "AST" categories for mailboxes, see the description for the mailbox type in this chapter (look under the Type field).

Creating or Re-assigning a Mailbox

To create a new mailbox or to assign a different mailbox type to an existing mailbox, you use the *Mailbox Options* item on the CUSTOMIZE DATABASE Menu.

- To create a new mailbox, you simply enter one of the unassigned (unused) mailbox numbers, then assign the desired the mailbox type to it.
- To change the mailbox type associated with a mailbox number, you enter the mailbox number, then assign the new mailbox type to it.

The mailbox types are described in this chapter. NVM-202 can accommodate 200 mailboxes. You can use mailbox numbers 000-999. The mailbox numbers that are assigned and unassigned, by default, are listed in the table on page 63.

To create a mailbox or re-assign a mailbox type:

1. With the Main Menu on the screen: Press CU, then press Enter.
2. Type the password, if the system asks for it, then press Enter. You see the CUSTOMIZE DATABASE Menu (below).
3. Press MO, space, a mailbox # or a range of numbers (#-#), then press Enter.
   - If you see: Undefined. Do you want to create this mailbox ? Press Y, then press Enter. Go to step 4.
   - If you see the list of mailbox types, go to step 4.
4. Press the code for the desired type of mailbox, then press Enter. Now you can customize the options for that type of mailbox.

```
******* CUSTOMIZE DATABASE Menu *******

Press command below,                To customize:
then press Enter:

    SO                              System Options
    PO                              Port Options
    MO, space, mailbox # or #-#     Mailbox Options
    AST                             Answering Schedule Table
    DAT                             Dial Action Table
    NO                              Message Notification Options
    DL, space, list #, space, A or  Distribution Lists
      D (to add/delete mailbox)
    E                               To exit to MAIN Menu

> After you select a      - Enter new data, then press Enter or Tab. Or
  command, you can        - Press Enter to move forward with no changes. Or,
  customize the           - Press Tab to move backward with no changes. Or,
  database as follows:    - Press Esc to exit.

> For help on using the "Help" command: Press H, space, H, Enter
```

Deleting a Mailbox

To delete a mailbox, you use the *Mailbox Options* item on the CUSTOMIZE DATABASE Menu.

To delete a mailbox:

1. With the Main Menu on your screen: Press CU, then press Enter.
2. Type the password, if the system asks for it, then press Enter.
3. When you see the CUSTOMIZE DATABASE Menu (below): Press MO, space, mailbox # you wish to delete, then press Enter. You see mailbox types. The cursor is next to the Type option.
4. Press UD (for undefined), then press Enter. This deletes the mailbox. You return to the CUSTOMIZE prompt.

```
******* CUSTOMIZE DATABASE Menu *******

Press command below,          To customize:
then press Enter:

    SO                        System Options
    PO                        Port Options
    MO, space, mailbox # or #-# Mailbox Options
    AST                       Answering Schedule Table
    DAT                       Dial Action Table
    NO                        Message Notification Options
    DL, space, list #, space, A or  Distribution Lists
      D (to add/delete mailbox)
    E                         To exit to MAIN Menu

> After you select a    - Enter new data, then press Enter or Tab. Or
  command, you can      - Press Enter to move forward with no changes. Or,
  customize the         - Press Tab to move backward with no changes. Or,
  database as follows:  - Press Esc to exit.

> For help on using the "Help" command: Press H, space, H, Enter
```

Call Routing Mailboxes

A Call Routing Mailbox lets a caller press a dialpad key (0-9, *, #) on their Touch Tone phone to route their own call. A Call Routing Mailbox uses:

- A **Dial Action Table** to assign an action (routing option) to each dialpad key. That is, a Dial Action Table determines how NVM-202 routes a call when the caller presses a dialpad key. For example: The Dial Action Table lets you program Key 1 to route (transfer) a caller to a specific extension -- perhaps the person in charge of customer service. For more information on the Dial Action Table, see *Dial Action Table* in Chapter 7.
- A **Welcome Message** to greet callers. A typical Welcome Message is: ***Thank you for calling for ABC Company.*** To record a Welcome Message, see Chapter 11.
- An **Instruction Menu** to let callers know their routing (dialing) options (that is, the routing options defined in the Dial Action Table). To record an Instruction Menu, see Chapter 11.

To have the Automated Attendant provide routing options to outside callers, you must assign the Call Routing Mailbox to an Answering Schedule Table (see *How the Automated Attendant Answers Calls* in Chapter 4). For a full explanation of the routing options and their related programming, see *How the Automated Attendant Provides Routing Options* in Chapter 4.

In addition, you can assign a Call Routing Mailbox to Subscriber and Message Center Mailboxes (this Call Routing Mailbox is referred to as a *Next Call Routing Mailbox*). For more information, see *Subscriber Mailboxes* and *Message Center Mailboxes* in this chapter.

Note: An extension user can transfer an outside caller to a Call Routing Mailbox. See *Transferring a Call to a Mailbox* in the User's Guide. This type of transfer is allowed only if the Call Routing Mailbox number falls into the extension numbering plan of the phone system.

Call Routing Mailboxes (cont'd)

To customize Call Routing Mailboxes from the MAIN Menu:

1. Press CU, then press Enter.
2. Type the password, if the system asks for it, then press Enter.
3. When you see the CUSTOMIZE DATABASE Menu (below): Press MO, space, a mailbox # or #-#, then press Enter.
4. Press CR, then press Enter. You can now customize the options.

```
******* CUSTOMIZE DATABASE Menu *******

Press command below,          To customize:
then press Enter:

SO                            System Options
PO                            Port Options
MO, space, mailbox # or #-#   Mailbox Options
AST                           Answering Schedule Table
DAT                           Dial Action Table
NO                            Message Notification Options
DL, space, list #, space, A or Distribution Lists
  D (to add/delete mailbox)
E                             To exit to MAIN Menu

> After you select a  - Enter new data, then press Enter or Tab. Or
  command, you can    - Press Enter to move forward with no changes. Or,
  customize the       - Press Tab to move backward with no changes. Or,
  database as follows: - Press Esc to exit.

> For help on using the "Help" command: Press H, space, H, Enter
```

About the Options

➤ **Type**

This is where you assign a mailbox type.

DEFAULT: NVM-202 creates the following 16 default Call Routing Mailboxes and assigns them to first four schedules (Morn, Aft, Eve, Wkend) in Answering Schedule Tables (AST) 1-4:

	AST 1	AST 2	AST 3	AST 4
Morn:	411	421	431	441
Aft:	412	422	432	442
Eve:	413	423	433	443
Wkend:	414	424	434	444

NVM-202 also creates Call Routing Mailbox 410 and assigns it to the Answering Schedule Override feature.

For a listing of the other default mailbox types and exceptions to the default numbering plan, see page 63.

ENTRIES:

S	Subscriber	G	Guest
MC	Message Center	UD	Undefined
A	Announcement	D	Distribution
FD	Future Delivery	T	Trunk
ACD	Automatic Call Distribution	DD	Directory Dialing
CR	Call Routing		

Note: When you change a mailbox type, NVM-202 erases the mailbox's extension number and messages (if any).

Call Routing Mailboxes (cont'd)

About the Options

➤ **Name**

This option lets you assign a name to the Call Routing Mailbox. The name appears in system reports. The name is also used for Directory Dialing. A caller dials this name from a Directory Dialing Mailbox to reach this Call Routing Mailbox. For more information on Directory Dialing, see *Directory Dialing Mailboxes* in Chapter 6.

A caller can also dial this name from an Extension Name Directory to transfer to this Call Routing Mailbox. See *How the Automated Attendant Provides Routing Options (Route to an Extension Name Directory)* in Chapter 4.

DEFAULT: None
ENTRIES: Up to 25 characters (numbers, letters, blanks, punctuation). The first character must not be a blank or a punctuation mark if name-dialing is allowed.
N - None

➤ **Department**

This option lets you enter the name of the department associated with the Call Routing Mailbox.

DEFAULT: None
ENTRIES: Up to 10 characters (numbers, letters, blanks, punctuation)
N - None

➤ **Dial Action Table**

This is the Dial Action Table number associated with the Call Routing Mailbox. See also the heading ***Related Programming***.

DEFAULT: NVM-202 assigns the following Dial Action Tables (DAT) to each default Call Routing (CR) Mailbox in Answering Schedule Tables (AST) (1-4).

AST 1:			AST 2:		
Morn	CR 411	DAT 1	Morn	CR 421	DAT 1
Aft	CR 412	DAT 1	Aft	CR 422	DAT 1
Eve	CR 413	DAT 2	Eve	CR 423	DAT 2
Wkend	CR 414	DAT 2	Wkend	CR 424	DAT 2
AST 3:			**AST 4:**		
Morn	CR 431	DAT 1	Morn	CR 441	DAT 1
Aft	CR 432	DAT 1	Aft	CR 442	DAT 1
Eve	CR 433	DAT 2	Eve	CR 443	DAT 2
Wkend	CR 434	DAT 2	Wkend	CR 444	DAT 2

NVM-202 assigns DAT 3 to Call Routing Mailbox 410 (which is for the Answering Schedule Override feature).

ENTRIES: 1-100
N - None

Call Routing Mailboxes (cont'd)

About the Options

➤ Rings before redirect trf

This is the number of times a screened transfer rings an extension before NVM-202 takes the call back and lets the caller know their dialing options (for example: ***To leave a message, press 1. For other options, press 2.***). A screened transfer will not, however, ring an extension at all if:

- The extension's mailbox greeting is on. NVM-202 immediately plays the greeting and lets the caller leave a message.
- The extension's Paging Message is on. NVM-202 immediately pages the person (see *Subscriber Mailboxes [Park/Paging string]* in this chapter).
- The extension has blocked Automated Attendant transfers (see *Subscriber Mailboxes [Block auto att.]* in this chapter).

If a screened transfer rings an extension fewer times than programmed here, you must increase one or both of the following telephone system timers: Hold Recall and/or the Rings Before Recall.

For more information on screened transfers, see *How the Automated Attendant Provides Routing Options* in Chapter 4.

DEFAULT: 3 times
ENTRIES: 1-99 times

➤ Directory List

This list code determines whether a caller can name-dial this Call Routing Mailbox from:

- A Directory Dialing Mailbox
- Another Call Routing Mailbox that is programmed for an Extension Name Directory

For more information on Directory Dialing Mailboxes, see Chapter 6. For more information on an Extension Name Directory, see *How the Automated Attendant Provides Routing Options* in Chapter 4. See also the heading ***Related Programming***.

DEFAULT: A

ENTRIES:		
	1-100 -	Allow caller to name-dial this Call Routing Mailbox only from a Directory Dialing Mailbox or Extension Name Directory that has a *Directory List to use* entry of 1-100 (respectively) or "A"
	A -	Allow caller to name-dial this Call Routing Mailbox from any Directory Dialing Mailbox or Extension Name Directory
	N -	Not allow caller to name-dial this Call Routing Mailbox

Call Routing Mailboxes (cont'd)

About the Options

➤ **Directory List to use**

This list code determines the extensions (or mailboxes) that a caller can name-dial from this Call Routing Mailbox. For more information on name-dialing from a Call Routing Mailbox, see *How the Automated Attendant Provides Routing Options (Route to an Extension Name Directory)* in Chapter 4. See also the heading ***Related Programming***.

DEFAULT: A

ENTRIES:		
	1-100 -	Allow caller to name-dial only the extensions or mailboxes with a *Directory List* entry of 1-100 (respectively) or "A"
	A -	Allow caller to name-dial extensions or mailboxes with any *Directory List* entry (1-100 or "A")
	N -	Not allow caller to name-dial any extensions or mailboxes

Related Programming

For Dial Action Table:

Use CUSTOMIZE DATABASE Menu, Dial Action Table

To assign a routing option to each dialpad key

For Directory List:

Use CUSTOMIZE DATABASE Menu, Mailbox Options

To assign a *Directory List to use* entry to a Directory Dialing Mailbox or to a Call Routing Mailbox that is programmed for an Extension Name Directory

For Directory List to use:

Use CUSTOMIZE DATABASE Menu, Mailbox Options

To assign a *Directory List* entry to each mailbox

Subscriber Mailboxes

A Subscriber Mailbox is a mailbox you assign to an extension so the extension user can access the NVM-202 features from their phone. After calling their mailbox, a Subscriber can record and listen to messages, record a mailbox greeting and name, use Message Notification, and more. For instructions on calling a Subscriber Mailbox, see *Calling Your Subscriber Mailbox* in the User's Guide.

To let callers reach a Subscriber Mailbox through the Automated Attendant, see Chapter 4, *Customizing the Automated Attendant*.

An extension user can also transfer an outside caller to a Subscriber Mailbox. See *Transferring a Call to a Mailbox* in the User's Guide. This type of transfer is allowed only if the Subscriber Mailbox number falls into the extension numbering plan of the phone system.

To customize Subscriber Mailboxes from the MAIN Menu:

1. Press CU, then press Enter.
2. Type the password, if the system asks for it, then press Enter.
3. When you see the CUSTOMIZE DATABASE Menu (below): Press MO, space, a mailbox # or #-#, then press Enter.
4. Press S, press Enter. You can now customize the options.

```
******* CUSTOMIZE DATABASE Menu *******

Press command below,          To customize:
then press Enter:

        SO                    System Options
        PO                    Port Options
        MO, space, mailbox # or #-#  Mailbox Options
        AST                   Answering Schedule Table
        DAT                   Dial Action Table
        NO                    Message Notification Options
        DL, space, list #, space, A or  Distribution Lists
          D (to add/delete mailbox)
        E                     To exit to MAIN Menu

> After you select a    - Enter new data, then press Enter or Tab. Or
  command, you can      - Press Enter to move forward with no changes. Or,
  customize the         - Press Tab to move backward with no changes. Or,
  database as follows:  - Press Esc to exit.

> For help on using the "Help" command: Press H, space, H, Enter
```

Subscriber Mailboxes (cont'd)

About the Options

➤ Type

This option lets you assign a mailbox type.

DEFAULT: Subscriber Mailboxes 300-347 for extensions 300-347, respectively, in the One- or Two-Cabinet phone system (16 x 48). Or: Subscriber Mailboxes 300-371 for extensions 300-371, respectively, in the Three-Cabinet phone system (24 x 72).

For a listing of the other default mailbox types and exceptions to the default numbering plan, see page 63.

ENTRIES:

S	Subscriber	G	Guest
MC	Message Center	UD	Undefined
A	Announcement	D	Distribution
FD	Future Delivery	T	Trunk
ACD	Automatic Call Distribution	DD	Directory Dialing
CR	Call Routing		

Note: When you change a mailbox type, NVM-202 erases the mailbox's extension number and messages (if any).

➤ Security Code

This code serves as a "lock" for the Subscriber Mailbox. Without dialing the code, a person cannot call the Subscriber Mailbox. A Subscriber can change their Security Code after calling their mailbox.

DEFAULT: Mailbox Default Security Code assigned during installation
ENTRIES: Up to 6 digits (0-9)
N - None

Note: The first time you enter a Security Code, you see the digits on the screen. If you return to it, you will notice that NVM-202 hides each digit with a star for privacy. If a Subscriber forgets their code, you must enter a new one on the screen and tell the Subscriber what it is.

➤ Name

This option lets you enter the Subscriber's name. The name appears in system reports. The name is also used for Directory Dialing. A caller dials this name from a Directory Dialing Mailbox to reach this Subscriber Mailbox or extension. For more information on Directory Dialing, see *Directory Dialing Mailboxes* in Chapter 6

A caller also dials this name from an Extension Name Directory to transfer to this Subscriber Mailbox or extension. If you set up a first-name (last-name) Directory, enter the first (last) name first. For more information, see *How the Automated Attendant Provides Routing Options (Route to an Extension Name Directory)* in Chapter 4.

Subscriber Mailboxes (cont'd)

About the Options

➤ **Name (cont'd)**

DEFAULT: None
ENTRIES: Up to 25 characters (numbers, letters, blanks, punctuation). The first character must not be a blank or a punctuation mark if name-dialing is allowed.
N - None

➤ **Department**

This option lets you enter the name of the Subscriber's department.

DEFAULT: None
ENTRIES: Up to 10 characters (numbers, letters, blanks, punctuation)
N - None

➤ **Extension**

This option lets you assign an extension to the Subscriber Mailbox. If you do not assign an extension, Automated Attendant callers will not be able to transfer to the Subscriber's extension.

DEFAULT: Same number as Subscriber Mailbox number
ENTRIES: A **unique** extension number

➤ **Msg Wait Lamp**

If this option is enabled, the Message Waiting Lamp at a Subscriber's extension flashes when there is a message in their mailbox that has not been listened to (see also *How You Know You Have Messages* in the User's Guide).

If a Subscriber receives a message while logged onto their mailbox, NVM-202 does not turn on the Msg Wait Lamp until the Subscriber exits their mailbox. NVM-202 will, however, play a voice prompt to let the person know they have received new messages. The Subscriber hears, ***You have received new messages***. NVM-202 plays this voice prompt if the person dials 9 to exit or if the person returns to the Main Menu of features before exiting.

DEFAULT: Y
ENTRIES: Y - Yes
N - No

Subscriber Mailboxes (cont'd)

About the Options

➤ **Next Call Routing mailbox**

This Call Routing Mailbox provides routing options:

- To callers who enter the Subscriber Mailbox to leave a message. After the beep sounds, the caller can dial 0 to route their call to another destination (e.g., the operator). You program the destination in the Next Call Routing Mailbox's Dial Action Table for Key 0.
- To Subscribers who dial 9 to exit their mailbox from an inside extension. The Subscriber can then dial * to go to the Next Call Routing Mailbox. Subscribers will know they can dial * because NVM-202 plays this prompt when the Subscriber dials 9: ***To go to the Automated Attendant, press the star key.*** When the Subscriber dials *, NVM-202 plays the Welcome Message and Instruction Menu for the Next Call Routing Mailbox, then lets the caller dial a code to route their call. You enter the routing options in the Next Call Routing Mailbox's Dial Action Table.

Note: A Subscriber can always dial 9 * from an outside phone to exit their mailbox and return to the Automated Attendant (i.e. the Instruction Menu for the Call Routing Mailbox [or Directory Dialing Mailbox] that originally handled the call).

- To NVM-202 Subscribers who forward their direct lines to their mailbox. They can call their line and dial * before the beep to connect to the Next Call Routing Mailbox. The Subscriber hears its Welcome Message and Instruction Menu and can dial a code to route their call. You enter the routing options in the Next Call Routing Mailbox's Dial Action Table. For information on forwarding calls to a mailbox, see the User's Guide.

  In addition, if a forwarded direct line caller hears, ***To leave a message, press 1. To have the person paged, press 2. For other options, press 3.***, pressing 3 reroutes the call using the Key 0 Action of the Next Call Routing Mailbox's Dial Action Table. See also the Subscriber Mailbox option, *Park/Paging string*.

- To a Subscriber whose mailbox blocks Automated Attendant transfers (see *Block auto att.* on the next page).

For general information on Call Routing Mailboxes, see Chapter 6. See also the heading ***Related Programming.***

DEFAULT: Call Routing Mailbox 411
ENTRIES: Any Call Routing Mailbox
N - None

Subscriber Mailboxes (cont'd)

About the Options

➤ **Block auto att.**

If enabled, this option prevents a Subscriber extension from receiving transfers from the Automated Attendant. The transferred caller immediately hears, ***Extension xxx is unavailable. To leave a message, press 1. For other options, press 2.*** If, however, you assign a Next Call Routing Mailbox to the Subscriber Mailbox (see previous page), NVM-202 reroutes the caller. NVM-202 reroutes the caller using the Key 0 Action in the Next Call Routing Mailbox's Dial Action Table. See also the heading ***Related Programming.***

DEFAULT: No
ENTRIES: Y - Yes
N - No

➤ **System Admin.**

This option lets you convert the Subscriber Mailbox into a System Administrator Mailbox. A System Administrator Mailbox has all the features of a Subscriber Mailbox plus access to the features on the System Administrator Menu (see Chapter 11) and the Database Management Menu (see the NVM-202 Installation and Telephone Programming Guide, Section 3).

DEFAULT: First extension in the extension numbering plan has a System Administrator Mailbox.
ENTRIES: Y - Yes
N - No

➤ **Msg Notification**

If this option is enabled, a Subscriber can use the Message Notification feature. See also the heading ***Related Programming.***

DEFAULT: Y
ENTRIES: Y - Yes
N - No

Local callouts

If this option is enabled, NVM-202 can send out local Message Notification calls for the Subscriber Mailbox. A local call is a number with 5-8 digits or a 1-800 number. This option also determines whether a Subscriber can enter a local notification number through their mailbox (see *Message Notification* in the User's Guide).

DEFAULT: N
ENTRIES: Y - Yes
N - No

Subscriber Mailboxes (cont'd)

About the Options ➤ Msg Notification (cont'd)

Long distance callouts

If this option is enabled, NVM-202 can send out long distance Message Notification calls for the Subscriber Mailbox. NVM-202 defines a long distance call as a number with 9 or more digits. You can let NVM-202 send out any long distance call or only calls to specific area codes. Enabling or disabling this option also determines whether a Subscriber can enter a long distance Message Notification number through their mailbox (see *Message Notification* in the User's Guide).

DEFAULT: N
ENTRIES: Y - Yes
N - No
S - Allow calls to some (up to 4) area codes (if you enter S, NVM-202 asks you to enter the area codes)

Notification Number

This option lets you enter the number NVM-202 should call when it sends out a Message Notification call for the Subscriber Mailbox. The Subscriber can also enter this number using their mailbox (see *Message Notification* in the User's Guide). If the number requires the entries F, W, S, P, M (below), you must enter the number from the terminal.

DEFAULT: Extension number for Subscriber Mailbox
ENTRIES: Up to 30 digits (you can also enter Speed Dial codes)
N - None
F - Flash (see also ***Related Programming***)
W - Wait for dial tone
S - Wait for any type of sound
P - Pause (202 pauses 2 seconds, dials next digit)
M - Monitored pause (202 pauses 2 seconds, dials next digit only if no busy/reorder tone. If busy/reorder tone exists after pause, 202 terminates the call.)

Call type

This option lets you enter the Call type (internal, local, long distance) for the notification number. Normally, NVM-202 looks at the number of digits in the number and automatically enters the Call type for you. The only time you have to enter the Call type is if NVM-202 enters the wrong one. This will happen, for example, when the notification number is a 3-digit Speed Dial code that calls a long distance number. NVM-202 analyzes this code as an internal call because it is less than five digits, when actually it is a long distance call. In this case, you would have to manually enter LD for the Call type.

DEFAULT: I
ENTRIES: I - Internal
LO - Local
LD - Long Distance

Subscriber Mailboxes (cont'd)

About the Options

➤ Msg Notification (cont'd)

Notification mode

This option lets you assign the Message Notification mode for the Subscriber Mailbox. The mode is the type of number NVM-202 calls: extension, outside telephone (including a car phone), radio pager, or digital pager.

DEFAULT: Normal
ENTRIES: N - Normal/Nonpager (Extension or Telephone)
P - Radio Pager
D - Digital Pager

Security Code required

If this option is enabled, a Subscriber must enter their Security Code after accepting a Message Notification call at a nonpager number. Dialing the Security Code provides access to the Subscriber Mailbox.

DEFAULT: No
ENTRIES: Y - Yes
N - No

➤ Number of msg

This is the maximum number of messages the Subscriber Mailbox can receive. To set message length, see the heading ***Related Programming.***

DEFAULT: 32
ENTRIES: 1-1000

➤ Msg playback FIFO/LIFO

This is the order in which NVM-202 plays a Subscriber's messages. FIFO (first in, first out) plays the first message first. LIFO (last in, first out) plays the last (most recent) message first.

DEFAULT: F
ENTRIES: F - FIFO
L - LIFO

➤ Directory List

This list code determines whether a caller can name-dial this Subscriber Mailbox or extension from:

- A Directory Dialing Mailbox
- A Call Routing Mailbox that is programmed for an Extension Name Directory.

For more information on Directory Dialing Mailboxes, see Chapter 6. For more information on an Extension Name Directory, see *How the Automated Attendant Provides Routing Options* in Chapter 4. See also the heading ***Related Programming.***

Subscriber Mailboxes (cont'd)

About the Options

➤ Directory List (cont'd)

DEFAULT: A
ENTRIES: 1-100 - Allow caller to name-dial this Subscriber Mailbox or extension only from a Directory Dialing Mailbox or Extension Name Directory with a *Directory List to use* entry of 1-100 (respectively) or "A"

A - Allow caller to name-dial this Subscriber Mailbox or extension from any Directory Dialing Mailbox or Extension Name Directory

N - Not allow caller to name-dial this Subscriber Mailbox or extension

➤ Forced unscreened transfer

This option forces all Automated Attendant transfers to the Subscriber extension to be unscreened transfers (UTRF). In other words, this option overrides a Dial Action Table that is set up for screened transfers (TRF). For more information on screened and unscreened transfers, see *How the Automated Attendant Provides Routing Options* in Chapter 4.

DEFAULT: N
ENTRIES: Y - Yes
N - No

➤ Park/Paging string

This string lets NVM-202 park a caller at the Subscriber extension, then page the Subscriber. NVM-202 makes the page as follows: It plays the Subscriber's Paging Message over a page zone in the telephone system. A typical Paging Message is: ***John Smith, you have a call parked at your extension.*** (see *About the Paging Message* in the User's Guide.) After NVM-202 makes the page, the Subscriber can pick up the call from any phone by dialing their Personal Park Orbit code (which is usually: *, then their extension number). The Park/Paging option is useful when the Subscriber is frequently away from their desk. The number of calls NVM-202 can park at the same extension is determined by the telephone system.

The Park/Paging option is available to two types of callers:

- Automated Attendant callers
- Callers who dial the Subscriber's direct line, if the direct line is forwarded to their mailbox using code 1 (which forwards unanswered calls). For more information, see the User's Guide.

Subscriber Mailboxes (cont'd)

About the Options ➤ **Park/Paging string (cont'd)**

More specifically, the Park/Paging option works like this:

1. a. When the Paging Message is on and an Automated Attendant caller tries to reach the Subscriber extension:
   NVM-202 says, ***Please Hold***, then parks the caller and pages the Subscriber. NVM-202 does not try to ring the extension. This option does not apply to direct line callers.

   b. When the Paging Message is off and an Automated Attendant or forwarded direct line caller dials the Subscriber extension:
   NVM-202 calls extension. If the extension does not answer after a certain number of rings, NVM-202 says: ***Extension XXX (or name) does not answer. To leave a message press 1. To have the person paged, press 2. For other options, press 3.***

   Pressing 1 lets the caller leave a message (the greeting plays if it is recorded). After leaving a message, the caller can:
   - Hang up.
   - Press # for the Automated Attendant. Automated Attendant callers return to the Instruction Menu for the Call Routing [or Directory Dialing] Mailbox that transferred the call. Direct line callers go to the Instruction Menu for the Subscribers' Next Call Routing Mailbox, if one is assigned.
   - Press 0 to be routed by the Key 0 Action of the Next Call Routing Mailbox, if one is assigned.

   Pressing 2 parks the caller and pages the Subscriber.

   Pressing 3 returns an Automated Attendant caller to the Instruction Menu for the Call Routing [or Directory Dialing] Mailbox that transferred the call. Pressing 3 routes a direct line caller using the Key 0 Action of the Subscriber's Next Call Routing Mailbox, if one is assigned.

2. If the Subscriber picks up the parked call within the Personal Park Orbit time, NVM-202 connects the caller to the extension. If not, or if the Page Zone is busy, NVM-202 plays: ***Extension XXX (or name) does not answer. To leave a message press 1. To have the person paged, press 2. For other options, press 3.*** See step 1b for a description (there is one difference: if an Automated Attendant caller presses 3, NVM-202 routes the caller using the Key 0 Action of the Subscriber's Next Call Routing Mailbox, if one is assigned).

NVM-202 will not park and page if:

- The Automated Attendant transfer is an unscreened transfer. NVM-202 transfers the call and releases it. For more information, see *Unscreened transfer to an extension* in Chapter 4.
- Automated Attendant calls are blocked. For more information, see the Subscriber Mailbox option, *Block auto. att.*
- The Subscriber's Paging Message is not recorded. NVM-202 treats the call as a normal unanswered unscreened transfer. For more information, see *Screened transfer to an extension* in Chapter 4.

Subscriber Mailboxes (cont'd)

About the Options

➤ Park/Paging string (cont'd)

NVM-202 will not park and page if (cont'd):

- The Subscriber's mailbox greeting is on. NVM-202 immediately plays the greeting. For more information, see *Screened transfer to an extension* in Chapter 4.

DEFAULT: F*(Subscriber extension #)/FW1*

To break down the default:

Park string = F*(Subscriber extension #)
For example: F*304 is the default Park string for ext. 304
Paging string = FW1*
Note: 1* pages the All Call Page Zone

The "/" character separates the strings

ENTRIES: Up to 20 digits (use the **Park string/Paging string** format)
Enter the Park/Pages codes for your telephone system.

N - None
F - Flash (see also ***Related Programming***)
W - Wait for dial tone
S - Wait for any type of sound
P - Pause (202 pauses 2 seconds, dials next digit)
M - Monitored pause (202 pauses 2 sec, dials next digit if no busy/reorder tone; otherwise 202 hangs up).
/ - Separates Park string from Paging string

➤ Call Waiting string

This string lets an Automated Attendant caller send a signal (beeps) to the Subscriber extension when it is busy. After sending the signal, the caller can wait for the extension to become available. Call Waiting occurs, however, only if the Subscriber extension has turned on Call Waiting (see the User's Guide). The number of callers that can wait for the same extension is determined by the telephone system.

More specifically, this is how Call Waiting works:

1. When an Automated Attendant caller tries to transfer (screened or unscreened) to the Subscriber extension and it is busy, the Automated Attendant says: ***Extension XXX (or name) is busy. To leave a message press 1. To wait for the extension number to become available, press 2. For other options, press 3.***
2. Pressing 1 lets the caller leave a message (the greeting plays if it is recorded). After leaving the message, the caller can:
   - Hang up.
   - Press # for the Automated Attendant (i.e., the Instruction Menu for the Call Routing [or Directory Dialing] Mailbox that transferred the call).
   - Press 0 to be routed by the Key 0 Action of the Next Call Routing Mailbox (if one is assigned to the Subscriber Mailbox).

Subscriber Mailboxes (cont'd)

About the Options ➤ Call Waiting string (cont'd)

2. (cont'd)
   Pressing 2 sends the Call Waiting beeps to the busy extension and lets the caller wait for the extension to become available.

   Pressing 3 returns the caller to the Automated Attendant Instruction Menu.

3. The waiting caller gets connected to the Subscriber extension as soon as the Subscriber answers the Call Waiting beeps. If the Subscriber does not answer the Call Waiting beeps (within the telephone system's Camp-On time), NVM-202 lets the caller leave a message. The caller either hears the Subscriber's mailbox greeting or these two standard voice prompts: ***Extension XXX is busy. At the tone, you can leave a message.*** After leaving a message, a caller can:
   - Hang up.
   - Press # for the Automated Attendant (i.e., the Instruction Menu for the Call Routing [or Directory Dialing] Mailbox that transferred the call).
   - Press 0 to be routed by the Key 0 Action of the Next Call Routing Mailbox (if one is assigned to the Subscriber Mailbox).

Call Waiting will not occur:

- For screened transfers, when the Subscriber's Paging Message is on. NVM-202 immediately parks and pages. See also the Subscriber Mailbox option, *Park/Paging string*.
- When the Subscriber's mailbox greeting is on. NVM-202 immediately plays the greeting to the caller. For more information, see *Screened transfer to an extension* in Chapter 4.
- When Call Waiting is off at the Subscriber extension. NVM-202 says: ***Extension XXX (or name) is busy. To leave a message, press 1. For other options, press 2.*** For more information, see *Screened (Unscreened) transfer to an extension* in Chapter 4.
- When Automated Attendant calls are blocked for the Subscriber extension. For more information, see the Subscriber Mailbox option, *Block auto att.*

Note: If a busy Subscriber would rather be paged instead of receive Call Waiting beeps, you can enter the Park/Paging string in the Call Waiting string field. The Subscriber must still turn on Call Waiting at their phone. Then, with Call Waiting on, a transferred caller hears: ***Extension XXX (or name) is busy. To leave a message press 1. To have the person paged, press 2. For other options, press 3.*** Pressing 2 places the caller in a Personal Park Orbit at the busy extension and pages the Subscriber. For more information, see the Subscriber Mailbox option, *Park/Paging string*.

Subscriber Mailboxes (cont'd)

About the Options

➤ **Call Waiting string (cont'd)**

DEFAULT: Call Waiting string: FWXXX, where XXX is the Subscriber extension number

ENTRIES: Up to 20 digits: Enter the string that the telephone system uses for Call Waiting.

N - None
F - Flash (see also ***Related Programming***)
S - Wait for any type of sound
W - Wait for dial tone
P - Pause (202 pauses 2 seconds, dials next digit)
M - Monitored pause (202 pauses 2 seconds, dials next digit only if no busy/reorder tone. If busy/reorder tone exists after pause, 202 terminates the call.)

For information on entering a Park/Paging string, see the Subscriber Mailbox option, *Park/Paging string*.

➤ **Call Announcing**

This option lets NVM-202 announce an Automated Attendant caller to the Subscriber extension. The Subscriber can then accept or reject the call.

More specifically, this is how Call Announcing works:

1. When a caller tries to transfer to the Subscriber extension, NVM-202 says: ***At the tone, please record your name so that I may announce your call. When you are done recording, press the pound key.***

2. When the caller presses the pound key, NVM-202 tries the extension. If the caller does not press the pound key within the interval called, *Time limit for dialing commands*, the Automated Attendant transfers the call anyway.

3. When the Subscriber answers and says "Hello," NVM-202 says this: ***Hello. I have a call for (Subscriber's extension XXX or name) from (the caller's name). To accept this call, dial 1. Otherwise, hang up.***

4. If the Subscriber dials 1, NVM-202 says, ***Connecting***, then connects the parties. If the Subscriber hangs up, the caller hears the Subscriber's mailbox greeting or these voice prompts: ***Extension XXX (or name) is not available. To leave a message, press 1. For other options, press 2.***

Subscriber Mailboxes (cont'd)

About the Options

➤ **Call Announcing (cont'd)**

4. (cont'd)

If the greeting plays, a caller can leave a message, then:

- Hang up.
- Press # for the Automated Attendant (i.e., the Instruction Menu for the Call Routing [or Directory Dialing] Mailbox that transferred the call).
- Press 0 to be routed by the Key 0 Action of the Next Call Routing Mailbox (if one is assigned).

If the extension status message plays, the caller can:
Press 1 to leave a message, then do one of the following:

- Hang up.
- Press # for the Automated Attendant (i.e., the Instruction Menu for the Call Routing [or Directory Dialing] Mailbox that transferred the call).
- Press 0 to be routed by the Key 0 Action of the Next Call Routing Mailbox (if a Next Call Routing Mailbox is assigned to the Subscriber Mailbox)

Press 2 to return to the Automated Attendant Instruction Menu.

Call Announcing will not occur if:

- The transfer is unscreened.
- The Subscriber's Paging Message is on. NVM-202 parks the caller and pages the Subscriber. See also the Subscriber Mailbox option, *Park/Paging string*.
- The Subscriber's mailbox greeting is on. NVM-202 plays the greeting. See also *Screened transfer to an extension* in Chapter 4.
- Automated Attendant calls are blocked for the Subscriber extension. See also the Subscriber Mailbox option, *Block auto att.*
- The programmed System Option, *Ringdown string*, is incorrect.

See also the heading ***Related Programming***.

DEFAULT: No
ENTRIES: Y - Yes
N - No

➤ **Auto erase/save of messages**

This option determines whether NVM-202 automatically erases or saves a message that has been completely listened to in the Subscriber Mailbox. The automatic erase or save occurs when a person exits the Subscriber Mailbox after listening to the message. If, however, a person presses E (to erase) or SA (to save) the message, that action overrides the auto erase/save setting.

DEFAULT: E
ENTRIES: E - Erase
S - Save

Subscriber Mailboxes (cont'd)

About the Options

➤ **Message retention**

This option determines how long NVM-202 retains a message in the Subscriber Mailbox. Message retention applies to any message that NVM-202 or the mailbox user does not erase. When the message retention time expires, NVM-202 automatically erases the message.

DEFAULT: Indefinite
ENTRIES: 1-90 days
I - Indefinite (NVM-202 will not erase the message)

➤ **Recording conversation beep**

This option determines whether NVM-202 plays the voice prompt, ***Recording***, and a beep when a person presses the RECORD key at the Subscriber extension to record a conversation.

DEFAULT: Yes
ENTRIES: Y - Yes
N - No

Related Programming

For Msg Wait Lamp:

Use CUSTOMIZE DATABASE Menu, Port Options

To enable Msg Wait Lamp callouts

For Next Call Routing Mailbox (to let a caller dial 0 while in a Subscriber Mailbox):

Use CUSTOMIZE DATABASE Menu, Mailbox Options

To create the Call Routing Mailbox that should be used as the Next Call Routing Mailbox. Make sure to assign a Dial Action Table to it.

Use CUSTOMIZE DATABASE MENU, Dial Action Table

To create the Dial Action Table and assign the desired action and number to Key 0

If dialing 0 should send a caller to the operator, enter this in the Dial Action Table:
Key 0 Action - UTRF
Key 0 Number - 0

Use Recording a Mailbox Greeting in the User's Guide

To record a mailbox greeting that explains what dialing 0 does. For example: ***Hello. I can't answer the phone right now. Please leave a message after the tone. To reach the operator, dial 0.***

Subscriber Mailboxes (cont'd)

Related Programming

For Next Call Routing Mailbox (to let a Subscriber dial *):

Use CUSTOMIZE DATABASE Menu, Mailbox Options

To create the Call Routing Mailbox that should be used as the Next Call Routing Mailbox. Make sure to assign a Dial Action Table to it.

Use CUSTOMIZE DATABASE MENU, Dial Action Table

To create the Dial Action Table with the desired routing options

Use System Administrator Options (Chapter 11)

To record a Welcome Message and Instruction Menu for the Next Call Routing Mailbox

For Block auto att.

Use CUSTOMIZE DATABASE Menu, Mailbox Options

To create the Call Routing Mailbox that should be used as the Next Call Routing Mailbox. Make sure to assign a Dial Action Table to it.

Use CUSTOMIZE DATABASE MENU, Dial Action Table

To create the Dial Action Table and assign the desired action and number to Key 0

If a blocked Automated Attendant transfer should be rerouted to the operator, enter this in the Dial Action Table:
Key 0 Action - UTRF
Key 0 Number - 0

For Message Notification:

Use CUSTOMIZE DATABASE Menu, Message Notification Options

To customize the way Message Notification calls are sent

Use CUSTOMIZE DATABASE Menu, Port Options

To enable/disable Message Notification calls for each port

To assign the telephone system extension number to each installed port

Use CUSTOMIZE DATABASE Menu, System Options

To set the duration of the Flash (if you must enter one in a notification number)

Use Message Notification feature in User's Guide

For a description of Message Notification, to turn Message Notification on/off, and to set up the notification schedule, mode, and number

For Number of msg:

Use CUSTOMIZE DATABASE Menu, System Options

To set message length

Subscriber Mailboxes (cont'd)

Related Programming

For Directory List:

Use CUSTOMIZE DATABASE Menu, Mailbox Options

To assign a *Directory List to use* to a Directory Dialing Mailbox or to a Call Routing Mailbox that is programmed for an Extension Name Directory

For Park/Paging string:

Use CUSTOMIZE DATABASE Menu, System Options

To set the duration of the Flash (if you must enter one in the Park/Paging string)

For Call Waiting:

Use CUSTOMIZE DATABASE Menu, System Options

To set the duration of the Flash (if you must enter one in the string)

For Call Announcing:

Use CUSTOMIZE DATABASE Menu, Port Options

To assign the keyset extension number to each installed port (if you do not, Call Announcing/Screening may not operate correctly)

Use CUSTOMIZE DATABASE Menu, System Options

To enter the correct Ringdown digit

For miscellaneous message-related and mailbox-related options:

Use CUSTOMIZE DATABASE Menu, System Options

To set mailbox logon time, etc.

Use System Administrator Options (Chapter 11)

To record a Broadcast Message for all Subscriber Mailboxes, if desired

To record names for the Subscriber Mailboxes, if desired

Trunk Mailboxes

A Trunk Mailbox is a mailbox you assign to each trunk that should be answered by NVM-202.

To customize Trunk Mailboxes from the MAIN Menu:

1. Press CU, then press Enter.
2. Type the password, if the system asks for it, then press Enter.
3. When you see the CUSTOMIZE DATABASE Menu (below): Press MO, space, a mailbox # or #-#, then press Enter.
4. Press T, press Enter. Customize the options.

```
******* CUSTOMIZE DATABASE Menu *******

Press command below,          To customize:
then press Enter:

    SO                        System Options
    PO                        Port Options
    MO, space, mailbox # or #-#  Mailbox Options
    AST                       Answering Schedule Table
    DAT                       Dial Action Table
    NO                        Message Notification Options
    DL, space, list #, space, A or  Distribution Lists
      D (to add/delete mailbox)
    E                         To exit to MAIN Menu

> After you select a   - Enter new data, then press Enter or Tab. Or
  command, you can     - Press Enter to move forward with no changes. Or,
  customize the        - Press Tab to move backward with no changes. Or,
  database as follows: - Press Esc to exit.

> For help on using the "Help" command: Press H, space, H, Enter
```

About the Options

➤ Type

This option lets you assign a mailbox type.

DEFAULT: Trunk Mailboxes 348-363 for trunks 348-363, respectively, in a One- or Two-Cabinet telephone system (16 x 48). Or: Subscriber Mailboxes 372-395 for trunks 372-395, respectively, in the Three-Cabinet telephone system.

For a listing of the other default mailbox types and exceptions to the default numbering plan, see page 63.

ENTRIES:

S	Subscriber	G	Guest
MC	Message Center	UD	Undefined
A	Announcement	D	Distribution
FD	Future Delivery	T	Trunk
ACD	Automatic Call Distribution	DD	Directory Dialing
CR	Call Routing		

Note: When you change a mailbox type, NVM-202 erases the mailbox's extension number and messages (if any).

Trunk Mailboxes (cont'd)

About the Options

➤ **Name**

This option lets you enter a name for the Trunk Mailbox (e.g., WATS). The name appears in system reports.

DEFAULT: None
ENTRIES: Up to 25 characters (numbers, letters, blanks, punctuation)
N - None

➤ **Department**

This option lets you enter the department for the Trunk Mailbox.

DEFAULT: None
ENTRIES: Up to 10 characters (numbers, letters, blanks, punctuation)
N - None

➤ **Extension**

This option lets you enter the extension number assigned to the trunk in telephone system programming.

DEFAULT: Same as trunk number
ENTRIES: A **unique** trunk number

➤ **Answering Schedule Table**

This option lets you assign an Answering Schedule Table to the Trunk Mailbox. NVM-202 uses this Answering Schedule Table to answer the corresponding trunk. This Answering Schedule Table overrides the port's Answering Schedule Table. See also ***Related Programming***.

DEFAULT: N
ENTRIES: 1-16
N - None

➤ **Directory List**

Not used

DEFAULT: N/A
ENTRIES: N/A

Related Programming

For Answering Schedule Table

Use CUSTOMIZE DATABASE Menu, Answering Schedule Table

To create an Answering Schedule Table for the Trunk Mailbox

Message Center Mailboxes

A Message Center Mailbox lets an outside caller leave a recorded message through the Automated Attendant without dialing any codes. The caller hears the Message Center's recorded Welcome Message and a beep. After the beep sounds, the caller can leave a message. A Message Center Mailbox is primarily a "catch-all" type of mailbox for callers who dial the Automated Attendant from a rotary dial phone. To record a Welcome Message, see Chapter 11.

After leaving a message, a Touch Tone caller can press # to exit the Message Center Mailbox and reroute their call. Pressing # to exit is allowed, however, only if the caller reached the Message Center Mailbox through a Call Routing or Directory Dialing Mailbox. In this case, pressing # sends the caller back to the Instruction Menu for that mailbox.

A Touch Tone caller can also dial 0 after leaving a message in a Message Center Mailbox. The Message Center Mailbox must, however, have a Next Call Routing Mailbox. See ***About the Options*** for a description of the Next Call Routing Mailbox.

At some point in the day, someone in the company must call (log on to) the Message Center Mailbox, listen to each message, and forward each one to the appropriate person's mailbox. For information on calling a Message Center Mailbox, see the User's Guide. A Message Center Mailbox has access to all the features in the User's Guide except these: record and send a message (by pressing RS), record a reply while listening to or after a message (by pressing RE), record a mailbox greeting (by pressing G), record a future delivery message (by pressing F D), and forwarding calls to the Message Center Mailbox.

To let callers reach a Message Center Mailbox through the Automated Attendant, see Chapter 4, *Customizing the Automated Attendant*.

Note: An extension user can also transfer an outside caller to a Message Center Mailbox. See *Transferring a Call to a Mailbox* in the User's Guide. This type of transfer is allowed only if the Message Center Mailbox number falls into the Extension Numbering Plan of the phone system.

Message Center Mailboxes (cont'd)

To customize Message Center Mailboxes from the MAIN Menu:

1. Press CU, then press Enter.
2. Type the password, if the system asks for it, then press Enter.
3. When you see the CUSTOMIZE DATABASE Menu (below): Press MO, space, a mailbox # or #-#, then press Enter.
4. Press MC, press Enter. Customize the options.

```
******* CUSTOMIZE DATABASE Menu *******

Press command below,          To customize:
then press Enter:

SO                            System Options
PO                            Port Options
MO, space, mailbox # or #-#   Mailbox Options
AST                           Answering Schedule Table
DAT                           Dial Action Table
NO                            Message Notification Options
DL, space, list #, space, A or Distribution Lists
  D (to add/delete mailbox)
E                             To exit to MAIN Menu

> After you select a    - Enter new data, then press Enter or Tab. Or
  command, you can      - Press Enter to move forward with no changes. Or,
  customize the         - Press Tab to move backward with no changes. Or,
  database as follows:  - Press Esc to exit.

> For help on using the "Help" command: Press H, space, H, Enter
```

About the Options

➤ **Type**

This option lets you assign a mailbox type.

DEFAULT: NVM-202 assigns the 16 default Message Center (MC) Mailboxes shown in the chart below. NVM-202 divides them into four groups to co-ordinate with the Answering Schedule Tables (1-4). For example, if you assign AST 2 to a trunk for the Sales Department, it is recommended that you use (though it is not required) the AST 2 Message Center Mailboxes for the Sales Department.

AST 1: MC 415-418 AST 3: MC 435-448
AST 2: MC 425-428 AST 4: MC 445-448

For a listing of the other default mailbox types and exceptions to the default numbering plan, see page 63.

ENTRIES:

S	Subscriber	G	Guest
MC	Message Center	UD	Undefined
A	Announcement	D	Distribution
FD	Future Delivery	T	Trunk
ACD	Automatic Call Distribution	DD	Directory Dialing
CR	Call Routing		

Note: When you change a mailbox type, NVM-202 erases the mailbox's extension number and messages (if any).

Message Center Mailboxes (cont'd)

About the Options

➤ **Security Code**

This code serves as a "lock" for the Message Center Mailbox. Without dialing the code, a person cannot call (log on to) the Message Center Mailbox. After a person calls the Message Center Mailbox, they can change the Security Code.

DEFAULT: None
ENTRIES: Up to 6 digits (0-9)
N - None

Note: The first time you enter a Security Code, you see the digits on the screen. If you return to it, you will not see the digits. NVM-202 hides each digit with a star for privacy. If the person who usually retrieves the messages from the Message Center Mailbox forgets the Security Code, enter a new one on the screen and tell the person what it is.

➤ **Name**

This option lets you assign a name to the Message Center Mailbox. The name appears in system reports. The name is also used for Directory Dialing. A caller dials this name from a Directory Dialing Mailbox to reach this Message Center Mailbox or extension. For more information, see *Directory Dialing Mailboxes* in Chapter 6.

A caller also dials this name from an Extension Name Directory to transfer to this Message Center Mailbox or extension. For more information, see *How the Automated Attendant Provides Routing Options (Route to an Extension Name Directory)* in Chapter 4.

DEFAULT: None
ENTRIES: Up to 25 characters (numbers, letters, blanks, punctuation). For name-dialing, the first character must not be a blank or a punctuation mark.
N - None

➤ **Department**

This option identifies the department for the Message Center Mailbox.

DEFAULT: None
ENTRIES: Up to 10 characters (numbers, letters, blanks, punctuation)
N - None

➤ **Extension**

This option lets you assign an extension to the Message Center Mailbox. Assigning an extension:

- Lets Automated Attendant callers transfer to that extension.
- Lets a person use that extension to call (log on to) the Message Center Mailbox.
- Allows a Message Waiting Lamp (see next page)

DEFAULT: No extension number
ENTRIES: A **unique** extension number

Message Center Mailboxes (cont'd)

About the Options

➤ **Msg Wait Lamp**

If this option is enabled, the Message Waiting Lamp at the Message Center's extension will flash when there is a message in the Message Center Mailbox that has not been listened to (see also *How You Know You Have Messages* in the User's Guide).

If the Message Center Mailbox receives a message while someone is logged on to it, NVM-202 does not turn on the Msg Wait Lamp until the person exits the mailbox. NVM-202 will, however, play a voice prompt to let the person know there is a new message. The person hears, ***You have received new messages.*** NVM-202 plays this voice prompt if the person dials 9 to exit or if the person returns to the Main Menu of features before exiting.

See also the heading ***Related Programming.***

DEFAULT: Y
ENTRIES: Y - Yes
N - No

➤ **Next Call Routing Mailbox**

This Call Routing Mailbox provides routing options:

- To Touch Tone outside callers who enter the Message Center Mailbox to leave a message. After the beep sounds, the caller can dial 0 to route their call to another destination (e.g., the operator). You program the destination in the Next Call Routing Mailbox's Dial Action Table for Key 0.
- To a person who calls (logs on to) the Message Center Mailbox to listen to and forward its messages. If they dial 9 from an extension to exit the mailbox, they can then dial * to be connected to the Next Call Routing Mailbox. The person hears the Welcome Message and Instruction Menu for the Next Call Routing Mailbox and can dial a code to route their call. You program the routing options in the Next Call Routing Mailbox's Dial Action Table.

Note: A person can always dial 9 * from an outside phone to exit the Message Center Mailbox and return to the Automated Attendant (i.e., the Instruction Menu for the Call Routing [or Directory Dialing] Mailbox that handled the call). See also the heading ***Related Programming.***

DEFAULT:

For Message Center Mailboxes:	The Next Call Routing Mailbox is:
415-418	Call Routing Mailbox 411
425-428	Call Routing Mailbox 421
435-448	Call Routing Mailbox 431
445-448	Call Routing Mailbox 441

ENTRIES: Any Call Routing Mailbox Number
N - None

Message Center Mailboxes (cont'd)

About the Options

➤ **Msg Notification**

If this option is enabled, NVM-202 can send out Message Notification calls for messages in the Message Center Mailbox. See also the heading ***Related Programming.***

DEFAULT: Y
ENTRIES: Y - Yes
N - No

Local callouts

If this option is enabled, NVM-202 can send out local notification calls for the Message Center Mailbox. A local call is a number with 5-8 digits or a 1-800 number. This option also determines whether a person can enter a local notification number through the Message Center Mailbox (see *Message Notification* in the User's Guide).

DEFAULT: N
ENTRIES: Y - Yes
N - No

Long distance callouts

If this option is enabled, NVM-202 can send out long distance notification calls for the Message Center Mailbox. A long distance call is a number with 9 or more digits. You can let NVM-202 send out any long distance call or only calls to specific area codes. This option also determines whether a person can enter a long distance notification number through the Message Center Mailbox (see *Message Notification* in the User's Guide).

DEFAULT: N
ENTRIES: Y - Yes
N - No
S - Allow calls to some (up to 4) area codes

Notification Number

This is the number NVM-202 calls when it sends out a Message Notification call for the Message Center Mailbox. A person can also enter this number using the Message Center Mailbox (see *Message Notification* in the User's Guide). If, however, the number requires F, S, W, P, M (below), you must enter it from the terminal.

DEFAULT: None
ENTRIES: Up to 30 digits (you can also enter Speed Dial codes)
N - None
F - Flash (see also ***Related Programming***)
S - Wait for any type of sound
W - Wait for dial tone
P - Pause (202 pauses 2 seconds, dials next digit)
M - Monitored pause (202 pauses 2 seconds, dials next digit only if no busy/reorder tone. If busy/reorder tone exists after pause, 202 terminates the call.)

Message Center Mailboxes (cont'd)

About the Options

➤ **Msg Notification (cont'd)**

Call type

This option lets you enter the Call type for the notification number (i.e., internal, local, long distance). Normally, NVM-202 looks at the number of digits in the number and automatically enters the Call type for you. The only time you have to enter the Call type is if NVM-202 enters the wrong one. This will happen, for example, when the notification number is a 3-digit Speed Dial code that calls a long distance number. NVM-202 analyzes this code as an internal call because it is less than five digits, when actually it is a long distance call. In this case, you would have to manually enter LD for the Call type.

DEFAULT: I
ENTRIES: I - Internal
LO - Local
LD - Long Distance

Notification mode

This option lets you assign the Message Notification mode for the Message Center Mailbox. The mode is the type of number NVM-202 calls: extension, outside telephone (including a car phone), radio pager, or digital pager.

DEFAULT: Normal
ENTRIES: N - Normal/Nonpager (Extension or Telephone)
P - Radio Pager
D - Digital Pager

Security Code required

If this option is enabled, a person must enter the Message Center's Security Code after accepting a Message Notification call at any nonpager number. Entering the Security Code provides access to the Message Center Mailbox.

DEFAULT: No
ENTRIES: Y - Yes
N - No

➤ **Number of msg**

This is the number of messages the Message Center Mailbox can receive. To set message length, see the heading ***Related Programming***.

DEFAULT: 32
ENTRIES: 1-1000

Message Center Mailboxes (cont'd)

About the Options

➤ **Msg playback FIFO/LIFO**

This is the order in which NVM-202 plays messages in a Message Center Mailbox. FIFO (first in, first out) plays the first message first. LIFO (last in, first out) plays the last (most recent) message first.

DEFAULT: F
ENTRIES: F - FIFO
L - LIFO

➤ **Directory List**

This list code determines whether a caller can name-dial this Message Center Mailbox or extension from:

- A Directory Dialing Mailbox
- A Call Routing Mailbox programmed for an Extension Name Directory.

For more information on Directory Dialing Mailboxes, see Chapter 6. For more information on an Extension Name Directory, see *How the Automated Attendant Provides Routing Options* in Chapter 4. See also the heading ***Related Programming.***

DEFAULT: A
ENTRIES:
- 1-100 - Allow caller to name-dial this Message Center Mailbox or extension only from a Directory Dialing Mailbox or Extension Name Directory with a *Directory List to use* entry of 1-100 (respectively) or "A"
- A - Allow caller to name-dial this Message Center Mailbox or extension from any Directory Dialing Mailbox or Extension Name Directory
- N - Not allow caller to name-dial this Message Center Mailbox or extension

➤ **Forced unscreened transfer**

This option forces all Automated Attendant transfers to the Message Center extension to be unscreened transfers (UTRF). In other words, this option overrides a Dial Action Table that is set up for screened transfers (TRF). For more information on screened and unscreened transfers, see *How the Automated Attendant Provides Routing Options* in Chapter 4.

DEFAULT: No
ENTRIES: Y - Yes
N - No

Message Center Mailboxes (cont'd)

About the Options

➤ **Auto erase/save of messages**

This option determines whether NVM-202 automatically erases or saves a message that has been completely listened to in the Message Center Mailbox. The automatic erase or save happens when a person exits the Message Center Mailbox after listening to the message. If, however, a person presses E (to erase) or SA (to save) the message, that action will override the auto erase/save setting.

DEFAULT: E
ENTRIES: E - Erase
S - Save

➤ **Message retention**

This option determines how long NVM-202 retains a message in the Message Center Mailbox. Message retention applies to any message that NVM-202 or the mailbox user does not erase. When the message retention time expires, NVM-202 automatically erases the message.

DEFAULT: Indefinite
ENTRIES: 1-90 days
I - Indefinite (NVM-202 will not erase the message)

➤ **Recording conversation beep**

This option determines whether NVM-202 plays the voice prompt, ***Recording***, and a beep when someone presses the RECORD key at the Message Center extension to record a conversation.

DEFAULT: Yes
ENTRIES: Y - Yes
N - No

Related Programming

For Msg Wait Lamp:

Use CUSTOMIZE DATABASE Menu, Port Options

To enable Msg Wait Lamp callouts for a port

For Next Call Routing Mailbox (to let a caller dial 0 while in a Message Center Mailbox):

Use CUSTOMIZE DATABASE Menu, Mailbox Options

To create the Call Routing Mailbox that should be used as the Next Call Routing Mailbox. Make sure to assign a Dial Action Table to it.

Use CUSTOMIZE DATABASE MENU, Dial Action Table

To create the DAT and assign the desired action and number to Key 0

For example, if dialing 0 should send a caller to the operator, enter this in the DAT:
Key 0 Action - UTRF
Key 0 Number - 0

Message Center Mailboxes (cont'd)

Related Programming

For Next Call Routing Mailbox (to let a caller dial 0 while in a Message Center Mailbox, cont'd):

Use System Administrator Options (Chapter 11)

To record a Welcome Message for the Message Center Mailbox that explains what dialing 0 does. If dialing 0 sends a caller to an operator, the Welcome Message may be: ***Thank you for calling. Please leave a message after the tone. If you need further assistance, dial 0 for the operator.***

For Next Call Routing Mailbox (to let a person dial * or #):

Use CUSTOMIZE DATABASE Menu, Mailbox Options

To create the Call Routing Mailbox that should be used as the Next Call Routing Mailbox. Make sure to assign a Dial Action Table to it.

Use CUSTOMIZE DATABASE MENU, Dial Action Table

To create the Dial Action Table with the desired routing options

Use System Administrator Options (Chapter 11)

To record a Welcome Message and Instruction Menu for the Next Call Routing Mailbox

For Message Notification:

Use CUSTOMIZE DATABASE Menu, Message Notification Options

To customize the way Message Notification calls are sent

Use CUSTOMIZE DATABASE Menu, Port Options

To enable/disable Message Notification calls for each port

To assign the telephone system extension number to each installed port

For Message Notification:

Use CUSTOMIZE DATABASE Menu, System Options

To set the duration of the Flash (if you must enter one in the notification number)

Use Message Notification feature in User's Guide

For a description of Message Notification, to turn Message Notification on/off, and to set up the notification schedule, mode, and number

For Number of msg:

Use CUSTOMIZE DATABASE Menu, System Options

To set the message length

Message Center Mailboxes (cont'd)

Related Programming

For Directory List:

Use CUSTOMIZE DATABASE Menu, Mailbox Options

To assign a *Directory List to use* to a Directory Dialing Mailbox or to a Call Routing that is programmed for an Extension Name Directory

For miscellaneous message-related and mailbox-related options:

Use CUSTOMIZE DATABASE Menu, System Options

To set mailbox logon time, etc.

Use System Administrator Options (Chapter 11)

To record a Broadcast Message, if desired

Guest Mailboxes

A Guest Mailbox is a mailbox you can reserve for an outside party, typically a frequently-used vendor. People can record and send messages to the Guest Mailbox. The Guest can then call in through the Automated Attendant and listen to them. For instructions on calling a Guest Mailbox, see the User's Guide. A Guest Mailbox has access to all the features in the User's Guide unless you enable the programmable option: Record reply only.

To let Automated Attendant callers dial a single-digit code to be routed to a Guest Mailbox, see *How the Automated Attendant Provides Routing Options* in Chapter 4.

Note: An extension user can transfer an outside caller to a Guest Mailbox. See *Transferring a Call to a Mailbox* in the User's Guide. This type of transfer is allowed only if the Guest Mailbox number falls into the extension numbering plan of the telephone system.

To customize Guest Mailboxes from the MAIN Menu:

1. Press CU, then press Enter.
2. Type the password, if the system asks for it, then press Enter.
3. When you see the CUSTOMIZE DATABASE Menu (below): Press MO, space, a mailbox # or #-#, then press Enter.
4. Press G, press Enter. Customize the options.

```
******* CUSTOMIZE DATABASE Menu *******

Press command below,          To customize:
then press Enter:

SO                            System Options
PO                            Port Options
MO, space, mailbox # or #-#   Mailbox Options
AST                           Answering Schedule Table
DAT                           Dial Action Table
NO                            Message Notification Options
DL, space, list #, space, A or Distribution Lists
  D (to add/delete mailbox)
E                             To exit to MAIN Menu

> After you select a    - Enter new data, then press Enter or Tab. Or
  command, you can      - Press Enter to move forward with no changes. Or,
  customize the         - Press Tab to move backward with no changes. Or,
  database as follows:  - Press Esc to exit.

> For help on using the "Help" command: Press H, space, H, Enter
```

Guest Mailboxes (cont'd)

About the Options

➤ **Type**

This option lets you assign a mailbox type.

DEFAULT: NVM-202 assigns the 7 default Guest (G) Mailboxes shown in the chart below. NVM-202 divides them into four groups to co-ordinate with Answering Schedule Tables (AST) 1-4. For example, if you assign AST 2 to a trunk for the Sales Department, it is recommended that you use (though it is not required) the AST 2 Guest Mailboxes for the Sales Department.

AST 1: G 419-420	AST 3: G 439-440
AST 2: G 429-430	AST 4: G 449

For a listing of the other default mailbox types and exceptions to the default numbering plan, see page 63.

ENTRIES:

S	Subscriber	G	Guest
MC	Message Center	UD	Undefined
A	Announcement	D	Distribution
FD	Future Delivery	T	Trunk
ACD	Automatic Call Distribution	DD	Directory Dialing
CR	Call Routing		

Note: When you change a mailbox type, NVM-202 erases the mailbox's extension number and messages (if any).

➤ **Security Code**

This code serves as a "lock" for the Guest Mailbox. Without dialing the code, a Guest cannot call (log on to) the Guest Mailbox. A Guest can change the Security Code after calling the Guest Mailbox.

DEFAULT: None
ENTRIES: Up to 6 digits (0-9)
N - None

Note: The first time you enter a Security Code, you see the digits on the screen. If you return to it, you will not see the digits. NVM-202 hides each digit with a star for privacy. If the Guest forgets the Security Code, you will have to enter a new one on the screen and tell the Guest what it is.

➤ **Name**

This option lets you assign a name to the Guest Mailbox. The name appears in system reports. The name is also used for Directory Dialing. A caller dials this name from a Directory Dialing Mailbox to reach this Guest Mailbox or extension. For more information on Directory Dialing, see *Directory Dialing Mailboxes* in Chapter 6.

Guest Mailboxes (cont'd)

About the Options

➤ **Name (cont'd)**

A caller also dials this name from an Extension Name Directory to transfer to this Guest Mailbox or extension. If you set up a first-name (last-name) Extension Name Directory, enter the first (last) name first. For more information, see *How the Automated Attendant Provides Routing Options (Route to an Extension Name Directory)* in Chapter 4.

DEFAULT: None
ENTRIES: Up to 25 characters (numbers, letters, blanks, punctuation). The first character must not be a blank or a punctuation mark if name-dialing is allowed.
N - None

➤ **Department**

This option identifies the department associated with the Guest Mailbox.

DEFAULT: None
ENTRIES: Up to 10 characters (numbers, letters, blanks, punctuation)
N - None

➤ **Extension**

This option lets you assign an extension to the Guest Mailbox. Assigning an extension:

- Lets Automated Attendant callers transfer to that extension.
- Lets a person use that extension to call (log on to) the Guest Mailbox.
- Lets the Guest have a Message Waiting Lamp indication for messages in their mailbox (see below).

DEFAULT: No extension number
ENTRIES: A **unique** extension number

➤ **Msg Wait Lamp**

If this option is enabled, the Message Waiting Lamp at the Guest extension (see above) will flash when there is a message in the Guest Mailbox that has not been listened to (see also *How You Know You Have Messages* in the User's Guide).

If the Guest Mailbox receives a message while someone is logged on to it, NVM-202 does not turn on the Msg Wait Lamp until the person exits the mailbox. NVM-202 does, however, play a voice prompt to let the person know there is a new message. The person hears, ***You have received new messages***. NVM-202 plays this voice prompt if the person dials 9 to exit or returns to the Main Menu before exiting.

See also the heading ***Related Programming.***

DEFAULT: Y
ENTRIES: Y - Yes
N - No

Guest Mailboxes (cont'd)

About the Options

➤ **Msg Notification**

If this option is enabled, NVM-202 can send out Message Notification calls when there are messages in the Guest Mailbox. For more information, see the heading ***Related Programming***.

DEFAULT: Y
ENTRIES: Y - Yes
N - No

Local callouts

If this option is enabled, NVM-202 can send out local Message Notification calls for the Guest Mailbox. A local call is a number with 5-8 digits or a 1-800 number. This option also determines whether a Guest can enter a local Message Notification number through their Guest mailbox (see *Message Notification* in the User's Guide).

DEFAULT: N
ENTRIES: Y - Yes
N - No

Long distance callouts

If this option is enabled, NVM-202 can send out long distance Message Notification calls for the Guest Mailbox. NVM-202 defines a long distance call as a number with 9 or more digits. You can let NVM-202 send out any long distance call or only calls to specific area codes. Enabling or disabling this option also determines whether a Guest can enter a long distance Message Notification number through their Guest mailbox (see *Message Notification* in the User's Guide).

DEFAULT: N
ENTRIES: Y - Yes
N - No
S - Allow calls to some (up to 4) area codes (if you enter S, you must enter the area codes)

Notification Number

This is the number NVM-202 calls when it sends out a Message Notification call for the Guest Mailbox. This number can also be entered using the Guest Mailbox (see *Message Notification* in the User's Guide). If, however, the number requires the entries F, S, W, P, M, (see next page), you must enter the number from the terminal.

Guest Mailboxes (cont'd)

About the Options ➤ Msg Notification (cont'd)

Notification Number (cont'd)

DEFAULT: None
ENTRIES: Up to 30 digits (you can also enter Speed Dial codes)
N - None
F - Flash (see also ***Related Programming***)
S - Wait for any type of sound
W - Wait for dial tone
P - Pause (202 pauses 2 seconds, dials next digit)
M - Monitored pause (202 pauses 2 seconds, dials next digit only if no busy/reorder tone. If busy/reorder tone exists after pause, 202 terminates the call.)

Call type

This option lets you enter the Call type for the notification number (i.e., internal, local, long distance). Normally, NVM-202 looks at the number of digits in the number and enters the Call type for you. The only time you have to enter the Call type is if NVM-202 enters the wrong one. This will happen when, for example, the number is a 3-digit Speed Dial code for a long distance call. NVM-202 sees this code as an Internal call because it is less than five digits, when actually it is a long distance call. In this case, you would have to enter LD for the Call type.

DEFAULT: I
ENTRIES: I - Internal
LO - Local
LD - Long Distance

Notification mode

This option lets you assign the Message Notification mode for the Guest Mailbox. The mode is the type of number NVM-202 calls: extension, outside telephone (including a car phone), radio pager, or digital pager.

DEFAULT: Normal
ENTRIES: N - Normal/Nonpager (Extension or Telephone)
P - Radio Pager
D - Digital Pager

Security Code required

If this option is enabled, a Guest must enter their Security Code after accepting a notification call at any nonpager number. Entering the Security Code provides access to the messages in the Guest Mailbox.

DEFAULT: No
ENTRIES: Y - Yes
N - No

Guest Mailboxes (cont'd)

About the Options

➤ **Number of msg**

This is the number of messages the Guest Mailbox can receive. To set the message length, see the heading ***Related Programming***.

DEFAULT: 32
ENTRIES: 1-1000

➤ **Record reply only**

If this option is enabled, a Guest can use their mailbox to record a reply only (by pressing RE in the listen mode). The Guest will not be able to record and send a message (by pressing RS) nor forward a message (by pressing MF) in the listen mode.

DEFAULT: N
ENTRIES: Y- Yes
N - No

➤ **Msg playback FIFO/LIFO**

This is the order in which NVM-202 plays messages in a Guest Mailbox. FIFO (first in, first out) plays the first message first. LIFO (last in, first out) plays the last (most recent) message first.

DEFAULT: F
ENTRIES: F - FIFO
L - LIFO

➤ **Directory List**

This list code determines whether a caller can name-dial this Guest Mailbox or extension from:

- A Directory Dialing Mailbox
- A Call Routing Mailbox that is programmed for an Extension Name Directory.

For more information on Directory Dialing Mailboxes, see Chapter 6. For more information on an Extension Name Directory, see *How the Automated Attendant Provides Routing Options* in Chapter 4. See also the heading ***Related Programming***.

DEFAULT: A
ENTRIES:
- 1-100 - Allow caller to name-dial this Guest Mailbox or extension only from a Directory Dialing Mailbox or Extension Name Directory with a *Directory List to use* entry of 1-100 (respectively) or "A"
- A - Allow caller to name-dial this Guest Mailbox or extension from any Directory Dialing Mailbox or Extension Name Directory
- N - Not allow caller to name-dial this Guest Mailbox or extension

Guest Mailboxes (cont'd)

About the Options

➤ **Forced unscreened transfer**

This option forces all Automated Attendant transfers to the Guest extension to be unscreened transfers (UTRF). That is, this option overrides a Dial Action Table that is set up for screened transfers (TRF). For more information on transfers, see *How the Automated Attendant Provides Routing Options* in Chapter 4.

DEFAULT: No
ENTRIES: Y - Yes
N - No

➤ **Auto erase/save of messages**

This option determines whether NVM-202 automatically erases or saves a message that has been completely listened to. The automatic erase or save happens when a person exits the Guest Mailbox after listening to the message. If, however, a person presses E (to erase) or SA (to save) the message, that action will override the auto erase/save setting.

DEFAULT: E
ENTRIES: E - Erase
S - Save

➤ **Message retention**

This option determines how long NVM-202 keeps (retains) a message in the Guest Mailbox. Message retention applies to any message that NVM-202 or the mailbox user does not erase. When the message retention time expires, NVM-202 automatically erases the message.

DEFAULT: Indefinite
ENTRIES: 1-90 days
I - Indefinite (NVM-202 will not erase the message)

➤ **Recording conversation beep**

This option determines whether NVM-202 plays the voice prompt, ***Recording***, and a beep when a person presses the RECORD key at the Guest extension to record a conversation.

DEFAULT: Yes
ENTRIES: Y - Yes
N - No

Related Programming

For Msg Wait Lamp:

Use CUSTOMIZE DATABASE Menu, Port Options

To enable Msg Wait Lamp callouts for a port

Guest Mailboxes (cont'd)

Related Programming

For Message Notification:

Use CUSTOMIZE DATABASE Menu, Message Notification Options
To customize the way Message Notification calls are sent

Use CUSTOMIZE DATABASE Menu, Port Options
To enable/disable Message Notification calls for each port

To assign the designated Keyset extension number to each installed port

Use CUSTOMIZE DATABASE Menu, System Options
To set the duration of the Flash (if notification number requires one)

Use Message Notification feature in User's Guide
To turn Message Notification on or off for a mailbox and to select the notification schedule, number, and type

For Number of msg:

Use CUSTOMIZE DATABASE Menu, System Options
To set the message length

For Directory List:

Use CUSTOMIZE DATABASE Menu, Mailbox Options
To assign a *Directory List to use* to a Directory Dialing Mailbox or to a Call Routing Mailbox that is programmed for an Extension Name Directory

For miscellaneous message-related and mailbox-related options:

Use CUSTOMIZE DATABASE Menu, System Options
To set mailbox logon time, etc.

Distribution Mailboxes

A Distribution Mailbox is the mailbox you assign to a Distribution List (see *Distribution Lists* in Chapter 8). Using the Distribution Mailbox number, a person can record and send a message (by pressing RS) to all mailboxes on the assigned Distribution List. For information on recording and sending a message, see the User's Guide.

To customize Distribution Mailboxes from the MAIN Menu:

1. Press CU, then press Enter.
2. Type the password, if the system asks for it, then press Enter.
3. When you see the CUSTOMIZE DATABASE Menu (below): Press MO, space, a mailbox # or #-#, then press Enter.
4. Press D, press Enter. Customize the options.

```
******* CUSTOMIZE DATABASE Menu *******

Press command below,                To customize:
then press Enter:

SO                                  System Options
PO                                  Port Options
MO, space, mailbox # or #-#         Mailbox Options
AST                                 Answering Schedule Table
DAT                                 Dial Action Table
NO                                  Message Notification Options
DL, space, list #, space, A or      Distribution Lists
  D (to add/delete mailbox)
E                                   To exit to MAIN Menu

> After you select a    - Enter new data, then press Enter or Tab. Or
  command, you can      - Press Enter to move forward with no changes. Or,
  customize the         - Press Tab to move backward with no changes. Or,
  database as follows:  - Press Esc to exit.

> For help on using the "Help" command: Press H, space, H, Enter
```

About the Options

➤ **Type**

This option lets you assign a mailbox type.

DEFAULT: NVM-202 assigns Distribution Mailboxes 450-459.

For a listing of the other default mailbox types and exceptions to the default numbering plan, see page 63.

ENTRIES:	S	Subscriber	G	Guest
	MC	Message Center	UD	Undefined
	A	Announcement	D	Distribution
	FD	Future Delivery	T	Trunk
	ACD	Automatic Call Distribution	DD	Directory Dialing
	CR	Call Routing		

Note: When you change a mailbox type, NVM-202 erases the mailbox's extension number and messages (if any).

Distribution Mailboxes

About the Options

➤ **Name**

This option lets you assign a name to the Distribution Mailbox. The name appears in system reports.

DEFAULT: None
ENTRIES: Up to 25 characters (numbers, letters, blanks, punctuation)
N - None

➤ **Department**

This option identifies the department associated with the Distribution Mailbox.

DEFAULT: None
ENTRIES: Up to 10 characters (numbers, letters, blanks, punctuation)
N - None

➤ **Distribution List**

This is the Distribution List you assign to the Distribution Mailbox. See also the heading ***Related Programming.***

DEFAULT: 1-10 for Distribution Mailboxes 450-459, respectively
ENTRIES: 1-100

➤ **Directory List**

N/A

DEFAULT: N/A
ENTRIES: N/A

Related Programming

For Distribution List:

Use CUSTOMIZE DATABASE Menu, Distribution List

To set up Distribution Lists

Announcement Mailboxes

An Announcement Mailbox is an "information only" type of mailbox that plays an announcement (e.g., movie schedules, meeting schedules, insurance claim information, etc.). Someone calling through the Automated Attendant can listen to the announcement. After the announcement plays, NVM-202 either hangs up or sends the caller back to the Automated Attendant. To record an Announcement Message for an Announcement Mailbox, see Chapter 11.

To let callers reach an Announcement Mailbox through the Automated Attendant, see Chapter 4, *Customizing the Automated Attendant.*

Note: An extension user can also transfer an outside caller to an Announcement Mailbox. See *Transferring a Call to a Mailbox* in the User's Guide. This type of transfer is allowed only if the Announcement Mailbox number falls into the Extension Numbering Plan of the phone system.

To customize Announcement Mailboxes from the MAIN Menu:

1. Press CU, then press Enter.
2. Type the password, if the system asks for it, then press Enter.
3. When you see the CUSTOMIZE DATABASE Menu (below): Press MO, space, a mailbox # or #-#, then press Enter.
4. Press A, press Enter. Customize the options.

```
******* CUSTOMIZE DATABASE Menu *******

Press command below,          To customize:
then press Enter:

SO                            System Options
PO                            Port Options
MO, space, mailbox # or #-#   Mailbox Options
AST                           Answering Schedule Table
DAT                           Dial Action Table
NO                            Message Notification Options
DL, space, list #, space, A or Distribution Lists
  D (to add/delete mailbox)
E                             To exit to MAIN Menu

> After you select a      - Enter new data, then press Enter or Tab. Or
  command, you can        - Press Enter to move forward with no changes. Or,
  customize the           - Press Tab to move backward with no changes. Or,
  database as follows:    - Press Esc to exit.

> For help on using the "Help" command: Press H, space, H, Enter
```

Announcement Mailboxes (cont'd)

About the Options

➤ Type

This option lets you assign a mailbox type.

DEFAULT: NVM-202 assigns Announcement Mailboxes 400-409.

For a listing of the other default mailbox types and exceptions to the default numbering plan, see page 63.

ENTRIES:

S	Subscriber	G	Guest
MC	Message Center	UD	Undefined
A	Announcement	D	Distribution
FD	Future Delivery	T	Trunk
ACD	Automatic Call Distribution	DD	Directory Dialing
CR	Call Routing		

Note: When you change a mailbox type, NVM-202 erases the mailbox's extension number and messages (if any).

➤ Security Code

This code serves as a "lock" for the Announcement Mailbox. Without dialing the code, a person cannot listen to the Announcement Message.

DEFAULT: None
ENTRIES: Up to 6 digits (0-9)
N - None

Note: The first time you enter a Security Code, you see its digits. If you return to it, NVM-202 hides each digit with a star. If a caller forgets the Security Code, enter a new one and tell the person what it is.

➤ Name

This option lets you assign a name to the Announcement Mailbox. The name appears in system reports. The name is also used for Directory Dialing. A caller dials this name from a Directory Dialing Mailbox to reach this Announcement Mailbox. For more information on Directory Dialing, see *Directory Dialing Mailboxes* in Chapter 6.

A caller also dials this name from an Extension Name Directory to transfer to this Announcement Mailbox. For more information, see *How the Automated Attendant Provides Routing Options* in Chapter 4.

DEFAULT: None
ENTRIES: Up to 25 characters (numbers, letters, blanks, punctuation). The first character must not be a blank or a punctuation mark if name-dialing is allowed.
N - None

Announcement Mailboxes (cont'd)

About the Options

➤ **Department**

This option identifies the department associated with the Announcement Mailbox.

DEFAULT: None
ENTRIES: Up to 10 characters (numbers, letters, blanks, punctuation)
N - None

➤ **Repeat announcement**

This is the number of times the Announcement Message repeats.

DEFAULT: 0
ENTRIES: 0-10 times

➤ **Hang up after announcement**

This option determines what NVM-202 does after it plays the Announcement Message. If you enter "Yes," NVM-202 says ***Goodbye*** and hangs up. If you enter "No," NVM-202 sends the caller back to the Automated Attendant (that is, the Instruction Menu for the Call Routing or Directory Dialing Mailbox that handled the call).

Note: The "No" entry does not apply when the Announcement Mailbox is in an Answering Schedule Table.

DEFAULT: N
ENTRIES: Y - Yes
N - No

➤ **Directory List**

This list code determines whether a caller can name-dial this Announcement Mailbox from:

- A Directory Dialing Mailbox
- A Call Routing Mailbox that is programmed for an Extension Name Directory.

For more information on Directory Dialing Mailboxes, see Chapter 6. For more information on an Extension Name Directory, see *How the Automated Attendant Provides Routing Options* in Chapter 4. See also the heading ***Related Programming.***

DEFAULT: A
ENTRIES:
- 1-100 - Allow caller to name-dial this Announcement Mailbox only from a Directory Dialing Mailbox or Extension Name Directory with a *Directory List to use* entry of 1-100 (respectively) or "A"
- A - Allow caller to name-dial this Announcement Mailbox from any Directory Dialing Mailbox or Extension Name Directory
- N - Not allow caller to name-dial this Announcement Mailbox

Announcement Mailboxes (cont'd)

Related Programming

For Directory List:

Use CUSTOMIZE DATABASE Menu, Mailbox Options

To assign a *Directory List to use* to a Directory Dialing Mailbox or to a Call Routing Mailbox that is programmed for an Extension Name Directory

ACD Announcement Mailboxes (For Future Use)

An ACD (Automatic Call Distribution) Mailbox lets you record a customized ACD Announcement for an ACD group.

A sample ACD Announcement might be: ***Thank you for calling. All our technicians are currently with customers. Please hold, and a technician will be with you shortly.***

To record an ACD Announcement, see *Recording an Announcement Message* in Chapter 11.

To customize ACD Announcement Mailboxes from the MAIN Menu:

1. Press CU, then press Enter.
2. Type the password, if the system asks for it, then press Enter.
3. When you see the CUSTOMIZE DATABASE Menu (below): Press MO, space, mailbox # or #-#, then press Enter. You see mailbox types. The cursor is next to the Type option.
4. Press ACD, press Enter. Customize the options.

```
******* CUSTOMIZE DATABASE Menu *******

Press command below,          To customize:
then press Enter:

SO                            System Options
PO                            Port Options
MO, space, mailbox # or #-#   Mailbox Options
AST                           Answering Schedule Table
DAT                           Dial Action Table
NO                            Message Notification Options
DL, space, list #, space, A or Distribution Lists
  D (to add/delete mailbox)
E                             To exit to MAIN Menu

> After you select a   - Enter new data, then press Enter or Tab. Or
  command, you can     - Press Enter to move forward with no changes. Or,
  customize the        - Press Tab to move backward with no changes. Or,
  database as follows: - Press Esc to exit.

> For help on using the "Help" command: Press H, space, H, Enter
```

ACD Announcement Mailboxes (cont'd)

About the Options

➤ **Type**

This option lets you assign a mailbox type.

DEFAULT: No ACD Mailboxes

For a listing of the other default mailbox types and exceptions to the default numbering plan, see page 63.

ENTRIES:

S	Subscriber	G	Guest
MC	Message Center	UD	Undefined
A	Announcement	D	Distribution
FD	Future Delivery	T	Trunk
ACD	Automatic Call Distribution	DD	Directory Dialing
CR	Call Routing		

Note: When you change a mailbox type, NVM-202 erases the mailbox's **Extension** number and messages (if any).

➤ **Name**

This option lets you assign a name to the ACD Announcement Mailbox. The name appears in system reports.

DEFAULT: None
ENTRIES: Up to 25 characters (numbers, letters, blanks, punctuation)
N - None

➤ **Department**

This option identifies the department associated with the ACD Announcement Mailbox.

DEFAULT: None
ENTRIES: Up to 10 characters (numbers, letters, blanks, punctuation)
N - None

➤ **Directory List**

N/A

DEFAULT: N/A
ENTRIES: N/A

Related Programming

N/A

Directory Dialing Mailboxes

A Directory Dialing Mailbox is a special kind of Call Routing Mailbox. Like a Call Routing Mailbox, a Directory Dialing Mailbox uses a Dial Action Table to let a caller press a dialpad key to route their call. The difference is this: the Directory Dialing Mailbox lets a caller name-dial an extension or mailbox without first pressing the dialpad key for the Name Directory. That is, a caller can go to a mailbox or transfer to an extension by simply dialing its programmed name. For example, a caller who is in a Directory Dialing Mailbox dials SALES to go to Announcement Mailbox 740 named "SALES." A caller can name-dial Call Routing Mailboxes, Message Center Mailboxes/extensions, Announcement Mailboxes, other Directory Dialing Mailboxes, Guest Mailboxes/extensions, and Subscriber Mailboxes/extensions. For more information on a Call Routing Mailbox and what callers will hear when they go to a mailbox or transfer to an extension, see *How the Automated Attendant Provides Routing Options* in Chapter 4.

Like a Call Routing Mailbox, a Directory Dialing Mailbox lets a caller name-dial extensions or mailboxes only if the Dial Action Table supports it. Using the example above, a caller can name-dial the SALES mailbox only if the Dial Action Table supports dialing mailbox 740. To support dialing mailbox 740 or any mailbox that begins with the number 7, you would have to assign the "GOTO" action and XXX to key 7. The Dial Action Table would look like this:

Key 7 Action: GOTO
Key 7 Number: XXX

To support transfers to extension numbers that begin with 3, for example, the Dial Action Table must look like this:

Key 3 Action: TRF or UTRF
Key 3 Number: XXX

To let callers know what to dial, you must record a Directory Dialing Message for the Directory Dialing Mailbox. A sample message might be: ***For customer service, dial SERVICE, then press the pound key. To place an order, dial ORDER, then press the pound key. To exit, press only the pound key.*** For details on the type of information to include in a Directory Dialing Message, see Chapter 11.

To further customize the Directory Dialing feature, you can:

- Specify which mailboxes or extensions a caller can name-dial. To do this, you use the *Directory List to use* option of the Directory Dialing Mailbox.
- Specify whether a certain mailbox or extension can be called. To do this, you use the *Directory List* option for the mailboxes or extensions to be called.
- Record a name for each mailbox (or extension) to be called. This is necessary only if there is more than one mailbox with the same programmed name. For example, suppose there are two mailboxes named SALES: one for truck sales and one for car sales. You should record the names ***Truck Sales*** and ***Car Sales***. This way, when a caller dials SALES, NVM-202 will say: ***For Truck Sales, dial (TRUCK Mailbox Number). For Car Sales, dial (CAR Mailbox Number).*** To record mailbox names, see Chapter 11.

Directory Dialing Mailboxes (cont'd)

- You can record a Welcome Message and Instruction Menu for the Directory Dialing Mailbox. For more information, see Chapter 11.

NVM-202 does not complete a name-dialed call if:

- Name-dialing that extension is not allowed or the name does not exist. NVM-202 says, ***That name is not listed in the directory.***, then returns the caller to the Directory Dialing Message.
- The caller presses only the pound key. NVM-202 reroutes the caller using the Key 0 Action of the Dial Action Table.
- The caller does not dial the minimum number of letters programmed in the System Option: *Min entry for Directory Dialing*. NVM-202 says, ***You have not entered enough letters.***, then returns the caller to the Directory Dialing Message.

For a sample Directory Dialing set-up, see Figure 4.

To let callers reach a Directory Dialing Mailbox through the Automated Attendant, see Chapter 4.

Note: An extension user can also transfer an outside caller to a Directory Dialing Mailbox. See *Transferring a Call to a Mailbox* in the User's Guide. This type of transfer is allowed only if the Directory Dialing Mailbox number falls into the extension numbering plan of the phone system.

To customize Directory Dialing Mailboxes from the MAIN Menu:

1. Press CU, then press Enter.
2. Type the password, if the system asks for it, then press Enter.
3. When you see the CUSTOMIZE DATABASE Menu (below): Press MO, space, a mailbox # or #-#, then press Enter.
4. Press DD, then press Enter. You can now customize the options.

```
******* CUSTOMIZE DATABASE Menu *******

Press command below,          To customize:
then press Enter:

    SO                        System Options
    PO                        Port Options
    MO, space, mailbox # or #-#  Mailbox Options
    AST                       Answering Schedule Table
    DAT                       Dial Action Table
    NO                        Message Notification Options
    DL, space, list #, space, A or  Distribution Lists
      D (to add/delete mailbox)
    E                         To exit to MAIN Menu

> After you select a   - Enter new data, then press Enter or Tab. Or
  command, you can     - Press Enter to move forward with no changes. Or,
  customize the        - Press Tab to move backward with no changes. Or,
  database as follows: - Press Esc to exit.

> For help on using the "Help" command: Press H, space, H, Enter
```

Directory Dialing Mailboxes (cont'd)

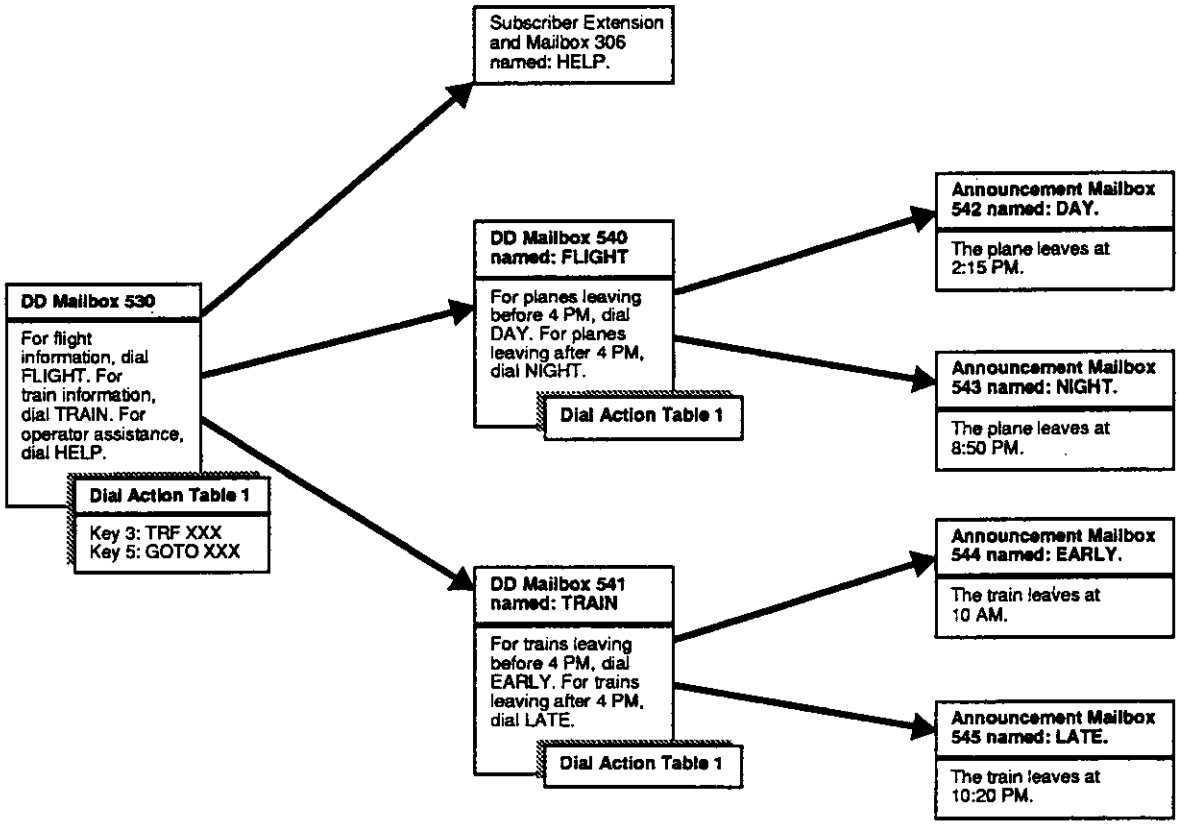

Figure 4

Directory Dialing Mailboxes (cont'd)

About the Options

➤ **Type**

This is where you assign a mailbox type.

DEFAULT: No Directory Dialing Mailboxes.

For a listing of the other default mailbox types and exceptions to the default numbering plan, see page 63.

ENTRIES:

S	Subscriber	G	Guest
MC	Message Center	UD	Undefined
A	Announcement	D	Distribution
FD	Future Delivery	T	Trunk
ACD	Automatic Call Distribution	DD	Directory Dialing
CR	Call Routing		

Note: When you change a mailbox type, NVM-202 erases the mailbox's **Extension** number and messages (if any).

➤ **Name**

This option lets you assign a name to the Directory Dialing Mailbox. The name appears in system reports. The name is also used for the Directory Dialing feature. A caller dials this name from another Directory Dialing Mailbox to reach this Directory Dialing Mailbox.

A caller also dials this name from an Extension Name Directory to transfer to this Directory Dialing Mailbox. See *How the Automated Attendant Provides Routing Options (Route to an Extension Name Directory)* in Chapter 4.

DEFAULT: None
ENTRIES: Up to 25 characters (numbers, letters, blanks, punctuation). The first character must not be a blank or a punctuation mark if name-dialing is allowed.
N - None

➤ **Department**

This option let you enter the name of the department associated with the Directory Dialing Mailbox.

DEFAULT: None
ENTRIES: Up to 10 characters (numbers, letters, blanks, punctuation)
N - None

➤ **Dial Action Table**

This is the Dial Action Table associated with the Directory Dialing Mailbox. See also the heading ***Related Programming***.

DEFAULT: N
ENTRIES: 1-100
N - None

Directory Dialing Mailboxes (cont'd)

About the Options

➤ Rings before redirect trf

When name-dialing makes a screened transfer to an extension, this "Rings" option is the number of times NVM-202 rings the extension before NVM-202 takes the call back and lets the caller know their dialing options (for example: ***To leave a message, press 1....***). A screened transfer will not, however, ring an extension at all if:

- The extension's mailbox greeting is on. NVM-202 immediately plays the greeting and lets the caller leave a message.
- The extension's Paging Message is on. NVM-202 immediately pages the person (see *Subscriber Mailboxes [Park/Paging string]* in this chapter).
- The extension has blocked Automated Attendant transfers (see *Subscriber Mailboxes [Block auto att.]* in this chapter).

If a screened transfer rings an extension fewer times than programmed here, you must increase one or both of the following telephone system timers: Hold Recall and/or the Rings Before Recall.

For more information on screened transfers, see *How the Automated Attendant Provides Routing Options* in Chapter 4.

DEFAULT: 3 times
ENTRIES: 1-99 times

➤ Directory List

This list code determines whether a caller can name-dial this Directory Dialing Mailbox from:

- Another Directory Dialing Mailbox
- A Call Routing Mailbox that is programmed for an Extension Name Directory.

For more information on an Extension Name Directory, see *How the Automated Attendant Provides Routing Options* in Chapter 4. See also the heading ***Related Programming***.

DEFAULT: A

ENTRIES:		
	1-100 -	Allow caller to name-dial this Directory Dialing Mailbox only from a Directory Dialing Mailbox or Extension Name Directory with a *Directory List to use* entry of 1-100 (respectively) or "A"
	A -	Allow caller to name-dial this Directory Dialing Mailbox from any Directory Dialing Mailbox or Extension Name Directory
	N -	Not allow caller to name-dial this Directory Dialing Mailbox

Directory Dialing Mailboxes (cont'd)

About the Options

➤ **Directory List to use**

This list code determines which extensions (or mailboxes) a caller can name-dial from this Directory Dialing Mailbox. See also the heading ***Related Programming.***

DEFAULT: A

ENTRIES:

1-100 -	Allow caller to name-dial only the extensions or mailboxes with a *Directory List* entry of 1-100 (respectively) or "A"
A -	Allow caller to name-dial all extensions or mailboxes
N -	Not allow caller to name-dial any extensions or mailboxes

Related Programming

For Dial Action Table:

Use CUSTOMIZE DATABASE Menu, Dial Action Table

To assign a routing action and number to the dialpad keys

For Directory List:

Use CUSTOMIZE DATABASE Menu, Mailbox Options

To assign a *Directory List to use* to a Directory Dialing Mailbox or to a Call Routing Mailbox programmed for an Extension Name Directory

For Directory List to use:

Use CUSTOMIZE DATABASE Menu, Mailbox Options

To create and customize all the mailboxes that a caller should be able to name-dial. Be sure to assign a name and Directory List to each. To let a caller name-dial a Subscriber, Message Center, or Guest extension, be sure to assign an extension number to those mailboxes.

Future Delivery Mailboxes

A Future Delivery Mailbox lets a Subscriber or Guest Mailbox user record a message and have NVM-202 deliver (send) it to other mailboxes at a future date and time. Future Delivery Messages are commonly used to remind other people of meetings, appointments, etc. To record a Future Delivery Message, a user must call their mailbox and press F D (see the User's Guide).

The Future Delivery Message gets stored in the Future Delivery Mailbox until the programmed date and time for delivery. If necessary, a user can call (log on to) the Future Delivery Mailbox, then listen to and erase the message before NVM-202 delivers it. While in the Future Delivery Mailbox, a user can get the time and date, and use all the listening options except: record a reply (RE), have the message forwarded (MF), and make an intercom call to the message sender (MC). No other features are available to the Future Delivery Mailbox.

NVM-202 allows one Future Delivery Mailbox. To change the Future Delivery Mailbox number, you must delete the current Future Delivery Mailbox, then create one with a new number.

To customize Future Delivery Mailboxes from the MAIN Menu:

1. Press CU, then press Enter.
2. Type the password, if the system asks for it, then press Enter.
3. When you see the CUSTOMIZE DATABASE Menu (below): Press MO, space, Future Delivery Mailbox #, then press Enter.
4. Press FD, press Enter. You can now customize the options.

```
******* CUSTOMIZE DATABASE Menu *******

Press command below,          To customize:
then press Enter:

SO                            System Options
PO                            Port Options
MO, space, mailbox # or #-#   Mailbox Options
AST                           Answering Schedule Table
DAT                           Dial Action Table
NO                            Message Notification Options
DL, space, list #, space, A or Distribution Lists
  D (to add/delete mailbox)
E                             To exit to MAIN Menu

> After you select a     - Enter new data, then press Enter or Tab. Or
  command, you can       - Press Enter to move forward with no changes. Or,
  customize the          - Press Tab to move backward with no changes. Or,
  database as follows:   - Press Esc to exit.

> For help on using the "Help" command: Press H, space, H, Enter
```

Future Delivery Mailboxes (cont'd)

About the Options

➤ **Type**

This option lets you assign a mailbox type.

DEFAULT: Future Delivery Mailbox 399

For a listing of the other default mailbox types and exceptions to the default numbering plan, see page 63.

ENTRIES:

S	Subscriber	G	Guest
MC	Message Center	UD	Undefined
A	Announcement	D	Distribution
FD	Future Delivery	T	Trunk
ACD	Automatic Call Distribution	DD	Directory Dialing
CR	Call Routing		

Note: When you change a mailbox type, NVM-202 erases the mailbox's extension number and messages (if any).

➤ **Security Code**

This code serves as a "lock" for the Future Delivery Mailbox. Without dialing the code, a person cannot call (log on to) the Future Delivery Mailbox.

DEFAULT: None
ENTRIES: Up to 6 digits (0-9)
N - None

Note: The first time you enter a Security Code, you see the digits on the screen. If you return to it, you will not see the digits. NVM-202 hides each digit with a star for privacy. If a person forgets the Security Code, you will have to enter a new one on the screen and tell them what it is.

➤ **Name**

This option lets you enter a name for the Future Delivery Mailbox. The name appears in system reports.

DEFAULT: None
ENTRIES: Up to 25 characters (numbers, letters, blanks, punctuation)
N - None

➤ **Department**

This option lets you enter the name of the department associated with the Future Delivery Mailbox.

DEFAULT: None
ENTRIES: Up to 10 characters (numbers, letters, blanks, punctuation)
N - None

Future Delivery Mailboxes (cont'd)

About the Options

➤ **Number of msg**
This is the maximum number of messages that the Future Delivery Mailbox can store. To set message length, see the heading ***Related Programming.***

DEFAULT: 32
ENTRIES: 1-1000

➤ **Directory List**
N/A

DEFAULT: N/A
ENTRIES: N/A

Related Programming

For Number of msg:

Use CUSTOMIZE DATABASE Menu, System Options
To set message length

For miscellaneous message-related and mailbox-related options:

Use CUSTOMIZE DATABASE Menu, System Options
To set mailbox logon time, etc.

Chapter 7

Customizing the Answering Schedule and Dial Action Tables

Answering Schedule Table....127
Schedule # Day (s) or Date....128
Schedule # Time....128
Schedule # Mailbox....128
Dial Action Table....129
Key # (0-9) Action....130
Key # (0-9) Number....131
TIMEOUT Action....131

Answering Schedule Table

The Answering Schedule Tables (1-16) let NVM-202 answer an incoming call using mailbox A during the day, mailbox B at night, etc. In each case, the caller hears the mailbox's recorded message. In an Answering Schedule Table, you can program up to 20 schedules. Each schedule includes:

- The type of mailbox that should answer the call
- The day (or date) that the mailbox should start answering the call
- The time of day that the mailbox should start answering the call

For example, it is common for an Answering Schedule Table to have the following four schedules: one for workday mornings, workday afternoons, workday evenings, and one for weekends (business off-hours).

Note: The equivalent of the Answering Schedule Tables (AST) in NVM-202 telephone programming are the Daily Department Schedules. If you change default schedules 1-4 in an AST to represent anything other than morning, afternoon, evening, and weekend hours, the prompts you hear when you do telephone programming will be incorrect. That is, when you press HS to listen to the Daily Department Schedules, the prompts will be incorrect. If this is of no concern, you can change schedules 1-4.

To customize an Answering Schedule Table from the MAIN Menu:

1. Press CU, then press Enter.
2. Type the password, if the system asks for it, then press Enter.
3. When you see the CUSTOMIZE DATABASE Menu (below): Press AST, then press Enter. Customize the options.

```
******* CUSTOMIZE DATABASE Menu *******

Press command below,          To customize:
then press Enter:

    SO                        System Options
    PO                        Port Options
    MO, space, mailbox # or #-# Mailbox Options
    AST                       Answering Schedule Table
    DAT                       Dial Action Table
    NO                        Message Notification Options
    DL, space, list #, space, A or  Distribution Lists
      D (to add/delete mailbox)
    E                         To exit to MAIN Menu

> After you select a      - Enter new data, then press Enter or Tab. Or
  command, you can        - Press Enter to move forward with no changes. Or,
  customize the           - Press Tab to move backward with no changes. Or,
  database as follows:    - Press Esc to exit.

> For help on using the "Help" command: Press H, space, H, Enter
```

Answering Schedule Table (cont'd)

About the Options

➤ **Schedule # Day (s) or Date**

This is the day (s) or date NVM-202 should start answering calls using the mailbox you enter for the option, *Schedule # Mailbox* (below).

DEFAULT: See below
ENTRIES: A single day (Mo, Tu, We, Th, Fr, Sa, Su)
A range of days (e.g., Mo-Fr)
A date (month [01-12]/date [01-31])

Note: You can enter any range of days except:

- A range that bridges Sunday. For example, you cannot enter Fr-Mo. To enter Fr-Mo, use two schedules: Fr-Su, and Mo.
- Mo-Su. The 202 system changes it to Su-Sa (also a full week).

➤ **Schedule # Time**

This is the time that NVM-202 should start answering a call using the mailbox you enter for the option, *Schedule # Mailbox* (below).

DEFAULT: See below
ENTRIES: HH:MM
HH = hour (00-23)
MM = minutes (00-59)

➤ **Schedule # Mailbox**

This is the mailbox that NVM-202 should use to answer a call on the day/date/time selected in the previous two options. You can enter these type of mailboxes: Call Routing, Message Center, Announcement, Directory Dialing, Subscriber.

DEFAULT: See below
ENTRIES: A mailbox number

By default, Answering Schedule Tables (AST) 1-4 are each set up with the four schedules shown below. A Call Routing Mailbox (CR) is assigned to each schedule.

	AST 1	AST 2	AST 3	AST 4
1. Morn (Mo-Fr, 8AM)	CR 411	CR 421	CR 431	CR 441
2. Aft (Mo-Fr, 12PM)	CR 412	CR 422	CR 432	CR 442
3. Eve (Mo-Th, 5PM)	CR 413	CR 423	CR 433	CR 443
4. Wkend (Fr, 5PM):	CR 414	CR 424	CR 434	CR 444

The default greeting (that is, Welcome Message and Instruction Menu) for all Call Routing Mailboxes is:
Thank you for calling. If you are calling from a Touch Tone phone, please dial the extension number you wish to reach or dial 0 for assistance. If you are calling from a rotary dial phone, please stay on the line for assistance.

Related Programming

See *How the Automated Attendant Answers Calls* in Chapter 4 for all related programming information.

Dial Action Table

A Dial Action Table (1-100) lets you assign an action (that is, a call routing option) and number to each dialpad key (0-9, *, #) on a Touch Tone phone. This lets an NVM-202 caller press a dialpad key to route their own call to an extension, mailbox, Voice Mail, etc. For example, you could program dialpad key 4 to let callers go to Announcement Mailbox 350 so they can hear the Announcement Message for the weekly business schedule. The Dial Action Table would look like this:

Key 4 Action: GOTO
Key 4 Number: 350

To provide call routing options to Automated Attendant callers, you must assign the Dial Action Table to a Call Routing Mailbox. Then, you must assign the Call Routing Mailbox to an Answering Schedule Table. For information on Call Routing Mailboxes, see Chapter 6. For information on Answering Schedule Tables, see *How the Automated Attendant Answers Calls* in Chapter 4.

You can also assign a Dial Action Table to a Directory Dialing Mailbox. This lets a caller name-dial extensions or mailboxes. For more information, see *Directory Dialing Mailboxes* in Chapter 6.

To access the Dial Action Table from the MAIN Menu:

1. Press CU, then press Enter.
2. Type the password, if the system asks for it, then press Enter.
3. . When you see the CUSTOMIZE DATABASE Menu (below): Press DAT, then press Enter. Customize the options.

```
****** CUSTOMIZE DATABASE Menu *******

Press command below,                To customize:
then press Enter:

        SO                          System Options
        PO                          Port Options
        MO, space, mailbox # or #-# Mailbox Options
        AST                         Answering Schedule Table
        DAT                         Dial Action Table
        DL, space, list #, space, A or  Message Notification Options
          D (to add/delete mailbox) Distribution Lists
        E                           To exit to MAIN Menu

> After you select a    - Enter new data, then press Enter or Tab. Or
  command, you can      - Press Enter to move forward with no changes. Or,
  customize the         - Press Tab to move backward with no changes. Or,
  database as follows:  - Press Esc to exit.

> For help on using the Help command: Press H, space, H, Enter
```

About the Options

➤ **Key # (0-9, *) Action**

This is the action (call routing option) associated with the dialpad key (0-9, *). The call routing options are fully described in Chapter 4.

Dial Action Table

About the Options

➤ **Key # (0-9, *) Action (cont'd)**

DEFAULT: See next page

ENTRIES:

UND	Assigns no routing action (that is, an undefined routing action) to the selected key. When a caller presses an UND key, NVM-202 says, ***That is an invalid entry. Please try again.*** No entry is required for the *Key # (0-9, *) Number* field.
TRF	(a) Lets a caller press the selected key to make a screened transfer to a specific extension (Note: Incomplete screened transfers are handled by NVM-202). Enter the desired extension in the *Key # (0-9, *) Number* field. (b) Lets a caller dial an extension number to make a screened transfer to that extension. For example: To allow screened transfers to all dialed extensions that begin with the digit 3, enter TRF for key 3. Then enter XXX in the *Key # (0-9, *) Number* field.
REC	Lets a caller press the selected key, then a mailbox number to record a quick message in that mailbox. Enter IXXX in the *Key # (0-9, *) Number* field.
DIRL	Lets a caller press the selected key to access an Extension Name Directory of last names. No entry is required in the *Key # (0-9, *) Number* field. DIRL does not apply to Directory Dialing Mailboxes.
LOGON	Lets a caller press the selected key, then their mailbox number to log on to their mailbox. No entry is required in the *Key # (0-9, *) Number* field.
GOTO	(a) Lets a caller press the selected key to go to a specific mailbox (Call Routing, Message Center, Subscriber, Guest, Announcement, Directory Dialing). Enter the desired mailbox number in the *Key # (0-9, *) Number* option. (b) Lets a caller dial a mailbox number to go to a mailbox. For example: To let callers dial mailbox numbers that begin with 7, assign GOTO to key 7, then enter XXX in the *Key # (0-9, *) Number* field.
UTRF	(a) Lets a caller press the selected key to make an unscreened transfer to a specific extension (Note: Incomplete screened transfers are handled by the phone system). Enter the desired extension in the *Key # (0-9, *) Number* field. (b) Lets a caller dial an extension number to make an unscreened transfer to the dialed extension. For example: To enable unscreened transfers to extensions that begin with the digit 3, assign UTRF to key 3. Then enter XXX in the *Key # (0-9, *) Number* field.

Dial Action Table (cont'd)

About the Options

➤ **Key # (0-9, *) Action (cont'd)**

HUP	Assigns the "Hang Up" routing option to the selected key. When a caller press an HUP key, NVM-202 says ***Goodbye*** and hangs up. No entry required in the *Key # (0-9, *) Number* field.
DIRF	Lets a caller press the selected key to access an Extension Name Directory of first names. No entry is required in the *Key # (0-9, *) Number* field. DIRF does not apply to Directory Dialing Mailboxes.

➤ **Key # (0-9, *) Number**

This is the number NVM-202 calls when a caller presses the key.

DEFAULT: See below
ENTRIES: Up to 30 digits:
Specific extension or mailbox
X - for each caller-dialed digit NVM-202 must recognize
I - for each caller-dialed digit NVM-202 must ignore
N - None
F - Flash (for Flash time, see *System Options* in Chapter 5)
S - Wait for any type of sound
W - Wait for dial tone
P - Pause (202 pauses 2 seconds, dials next digit)
M - Monitored pause (202 pauses 2 sec, dials next digit if no busy/reorder tone. Otherwise, hangs up.)

➤ **TIMEOUT Action**

This is the action (call routing option) that takes place when a caller does not dial anything within the *Time limit for dialing commands* (see Chapter 5).

DEFAULT: See below
ENTRIES: Same as Actions for Keys (0-9, *)

By default, NVM-202 assigns the following call routing options to Dial Action Tables 1-3 (see also the next page for more default settings):

Key 0	TRF 300 (Screened transfer to extension 300)
Keys 1-2	UND (Undefined Routing)
Key 3	TRF XXX (Lets caller dial any extension that begins with the digit 3 to make a screened transfer to that extension)
Key 4-8	UND (Undefined Routing)
Key 9	HUP (Hang up)
Key *	REC (Quick Message)
Key #	LOGON (Log on to Voice Mail)
TIMEOUT	TRF 300 (Screened transfer to extension 300)

Note: If, for example, the extension numbers start with 2, then NVM-202 sets up key 2 for screened transfer to XXX instead of key 3.

Dial Action Table (cont'd)

About the Options

By default, NVM-202 assigns Dial Action Tables (DAT) 1-2 to the Call Routing Mailboxes in Answering Schedule Tables (AST) 1-4. For information on ASTs, see page 36.

AST 1:			AST 2:		
1. Morn	CR 411	DAT 1	1. Morn	CR 421	DAT 1
2. Aft	CR 412	DAT 1	2. Aft	CR 422	DAT 1
3. Eve	CR 413	DAT 2	3. Eve	CR 423	DAT 2
4. Wkend	CR 414	DAT 2	4. Wkend	CR 424	DAT 2
AST 3:			**AST 4:**		
1. Morn	CR 431	DAT 1	1. Morn	CR 441	DAT 1
2. Aft	CR 432	DAT 1	2. Aft	CR 442	DAT 1
3. Eve	CR 433	DAT 2	3. Eve	CR 443	DAT 2
4. Wkend	CR 434	DAT 2	4. Wkend	CR 444	DAT 2

By default, NVM-202 assigns Dial Action Table 3 to Call Routing Mailbox 410, which is for the Answering Schedule Override feature. For more information, see Chapter 11.

Related Programming

Use Chapter 4, How the Automated Attendant Provides Routing Options
To do all of the related programming for each call routing option. Related programming starts on page 45.

Chapter 8

Customizing Message Notification Options and Distribution Lists

Message Notification Options 135
- Digital pager callback number 135
- Delay before dialing digital pager 135
- Delay before pager announcement 136
- Access digits before local callout 136
- Access digits before long distance callout 136
- Wait between pager callouts 137
- Wait between nonpager callouts 137
- Number of callout attempts 137
- Wait between RNA callouts 137
- Wait between BUSY callouts 137
- Send pager callouts until ack 138
- Number of rings per callout 138
- Notification callout report 138

Distribution Lists 139

Message Notification Options

With Message Notification, NVM-202 can call a person when they receive messages in their mailbox (this applies to Subscriber, Guest, and Message Center Mailboxes). NVM-202 can call extensions, outside telephones (including a car phone), radio pagers or digital pagers. The Message Notification Options below let you customize the way NVM-202 sends Message Notification calls. For other Message Notification options, see the heading ***Related Programming.***

To access the Message Notification Options from the MAIN Menu:

1. Press CU, then press Enter.
2. Type the password, if the system asks for it, then press Enter.
3. When you see the CUSTOMIZE DATABASE Menu (below): Press NO, then press Enter. You see the first option (below).

```
******* CUSTOMIZE DATABASE Menu *******

Press command below,                 To customize:
then press Enter:

        SO                           System Options
        PO                           Port Options
        MO, space, mailbox # or #-#  Mailbox Options
        AST                          Answering Schedule Table
        DAT                          Dial Action Table
        NO                           Message Notification Options
        DL, space, list #, space, A or  Distribution Lists
          D (to add/delete mailbox)
        E                            To exit to MAIN Menu

> After you select a     - Enter new data, then press Enter or Tab. Or
  command, you can       - Press Enter to move forward with no changes. Or,
  customize the          - Press Tab to move backward with no changes. Or,
  database as follows:   - Press Esc to exit.

> For help on using the "Help" command: Press H, space, H, Enter
```

About the Options

➤ **Digital pager callback number**

This is the telephone number that displays on a digital pager when the pager user receives a Message Notification call. You typically enter the telephone number for NVM-202.

DEFAULT: None (no callback number)
ENTRIES: Up to 12 digits
N - None

➤ **Delay before dialing digital pager**

This is the delay (wait time) between the dialing of the paging service number and the dialing of the digital pager callback number.

DEFAULT: 2 seconds
ENTRIES: 0-99 seconds

Message Notification Options (cont'd)

About the Options

➤ **Delay before pager announcement**

This option applies only to radio pager that can receive announcements. This option is the delay (wait time) between the dialing of the paging service number and the playing of the announcement. The announcement is as follows: ***I have a message for ___. You have ___ messages.***

DEFAULT: 2 seconds
ENTRIES: 0-99 seconds

➤ **Access digits before local callout**

These are the digits NVM-202 must dial for an outside line before it can send out a local Message Notification call. Enter the same digits a Subscriber would dial at their extension to get an outside line to make a local call. For example, if Subscribers must dial 9, then wait for dial tone, enter 9W in this field.

DEFAULT: None
ENTRIES: Up to 30 digits (you can also enter Speed Dial codes)
- N - None
- F - Flash (see also ***Related Programming***)
- S - Wait for any type of sound
- W - Wait for dial tone
- P - Pause (202 pauses 2 seconds, dials next digit)
- M - Monitored pause (202 pauses 2 seconds, dials next digit only if no busy/reorder tone. If busy/reorder tone exists after pause, 202 terminates the call.)

➤ **Access digits before long distance callout**

These are the digits NVM-202 must dial for an outside line before it can send out a long distance Message Notification call. Enter the same digits a Subscriber would dial at their extension to get an outside line to make a long distance call. For example, if Subscribers must dial 9, then wait for dial tone, enter 9W in this field. Another typical entry for this field is the access number to one of the special long distance services (MCI, Sprint, etc.).

DEFAULT: None
ENTRIES: Up to 30 digits (you can also enter Speed Dial codes)
- N - None
- F - Flash (see also ***Related Programming***)
- S - Wait for any type of sound
- W - Wait for dial tone
- P - Pause (202 pauses 2 seconds, dials next digit)
- M - Monitored pause (202 pauses 2 seconds, dials next digit only if no busy/reorder tone. If busy/reorder tone exists after pause, 202 terminates the call.)

Message Notification Options (cont'd)

About the Options

➤ **Wait between pager callouts**
This option sets the delay (wait time) between an acknowledged or unacknowledged pager notification call and the next pager notification call. (A pager notification call is "acknowledged" if the pager user responds to it by calling their mailbox.)

DEFAULT: 5 minutes
ENTRIES: 1-999 minutes

➤ **Wait between nonpager callouts**
This option sets the delay (wait time) between an acknowledged non-pager callout and the next non-pager callout. An acknowledged non-pager callout is one the recipient accepts by dialing 1 (or calling their mailbox). For more information on how dialing 1 works, see Message Notification in the User's Guide.

DEFAULT: 2 minutes
ENTRIES: 1-999 minutes

➤ **Number of callout attempts**
This option sets the number of times NVM-202 redials an unacknowledged notification call, a notification call to any busy number, or a notification call to an unanswered non-pager number. (A notification call is "unacknowledged" if the notified party does not respond by calling [logging on to] their mailbox.)

DEFAULT: 2 attempts
ENTRIES: 1-99 attempts

➤ **Wait between RNA callouts**
This option sets the delay (wait time) before NVM-202 redials a notification call to an unanswered or unacknowledged non-pager number. An unacknowledged non-pager call is a call the recipient does not accept by dialing 1 or calling their mailbox. For more information on how dialing 1 works, see Message Notification in the User's Guide.

DEFAULT: 5 minutes
ENTRIES: 1-999 minutes

➤ **Wait between BUSY callouts**
This option sets the delay (wait time) before NVM-202 redials a callout to a busy number.

DEFAULT: 2 minutes
ENTRIES: 1-999 minutes

Message Notification Options (cont'd)

About the Options

➤ **Send pager callouts until ack.**

If this option is enabled, NVM-202 sends notification calls to a pager until the pager owner acknowledges by calling their mailbox. That is, NVM-202 ignores the *Number of callout attempts* field.

DEFAULT: No
ENTRIES: Y - Yes
N - No

➤ **Number of rings per callout**

This option sets the number of times NVM-202 rings a non-pager number before it considers the call a Ring-No-Answer call. This option does not apply to pagers.

DEFAULT: 5 rings
ENTRIES: 1-99 rings

➤ **Notification callout report**

If this option is enabled, NVM-202 generates a Message Notification Callout report.

DEFAULT: No
ENTRIES: Y - Yes
N - No

Related Programming

For Message Notification:

Use CUSTOMIZE DATABASE Menu, Mailbox Options

To enable/disable Message Notification for each mailbox and set other Message Notification options

Use CUSTOMIZE DATABASE Menu, Port Options

To enable/disable Message Notification callouts for each port (NVM-202 sends the Message Notification calls through the ports)

To assign the designated Keyset extension number to each installed port

Use CUSTOMIZE DATABASE Menu, System Options

To set the duration of the Flash (if you must enter one in the access digits)

Use Message Notification Instructions in User's Guide

For a description of Message Notification, to turn Message Notification on/off, and to set up the notification schedule, mode, and number

Use VIEW/PRINT Reports Menu, Message Notification Callout Report

To view the Message Notification Callout Report

Distribution Lists

A Distribution List is a list of mailboxes that is identified by a Distribution Mailbox number. It is common to place all the mailboxes in a particular department in a Distribution List. A person can record and send a message to a Distribution List by entering its Distribution Mailbox number. If a person records and sends a message to their own Distribution List, NVM-202 does not send the message to that person. NVM-202 allows 100 Distribution Lists, and each Distribution List can contain Subscriber, Guest, or Message Center Mailboxes. The total number of mailboxes on all lists cannot exceed 200.

To access Distribution Lists starting from the MAIN Menu:

1. Press CU, then press Enter.
2. Type the password, if the system asks for it, then press Enter.
3. When you see the CUSTOMIZE DATABASE Menu (below): Press DL, space, list number (1-100), space.
4. Press A to add mailboxes to the list.
   OR
   Press D to delete mailboxes from the list.
5. Enter a mailbox number, press Enter.
6. Repeat step 5 until you are done, then press Esc.

For other ways of entering/deleting mailboxes, access the Help screen for Distribution Lists as follows: Press H, space, DL, Enter.

To view a Distribution List:

1. Press DL, space, -L, list #, Enter

```
******* CUSTOMIZE DATABASE Menu *******

Press command below,          To customize:
then press Enter:

    SO                        System Options
    PO                        Port Options
    MO, space, mailbox # or #-#  Mailbox Options
    AST                       Answering Schedule Table
    DAT                       Dial Action Table
    NO                        Message Notification Options
    DL, space, list #, space, A or  Distribution Lists
      D (to add/delete mailbox)
    E                         To exit to MAIN Menu

> After you select a    - Enter new data, then press Enter or Tab. Or
  command, you can      - Press Enter to move forward with no changes. Or,
  customize the         - Press Tab to move backward with no changes. Or,
  database as follows:  - Press Esc to exit.

> For help on using the "Help" command: Press H, space, H, Enter
```

Related Programming

Use CUSTOMIZE DATABASE Menu, Mailbox Options

To create a Distribution Mailbox and assign a Distribution List to it

Section 3:

Handling System Administration

Chapter 9

Viewing and Printing Reports

Reports 145
Port Usage 145
Mailbox Options 146
Mailbox Directory (by Type) 146
Mailbox List (Numerical) 146
Mailbox Message Usage 146
Mailbox Call Handling Flags 147
Mailbox Access 147
Message Notification Callouts 148
Distribution Lists 148
Automated Attendant per Port 148
Automated Attendant per Trunk 148
Error/Activity Log 148
All Reports 148

Reports

NVM-202 provides reports you can view on the screen or print. The reports show database and message information.

To view or print reports from the MAIN Menu:

1. Press RP, then press Enter.
2. When you see the VIEW/PRINT REPORTS Menu (below), do the following:

   To view a report:
   Press command for the report, then press Enter.

   To print a report:
   Connect the printer to the Printer connector on the NVM-202 (see Figure 1 on page 13). Turn on the printer.
   Press command for the report, space, -P, then Enter.

   To view or print only part of a report, or to reset certain reports:
   Access the report's Help screen for instructions:
   Press H, space, command for the report, Enter.

******* VIEW/PRINT REPORTS Menu *******

Press command below, then press Enter:	To view (display) this report:
PU	Port Usage
MO	Mailbox Options
MD	Mailbox Directory (by Type)
ML	Mailbox List (Numerical)
MU	Mailbox Message Usage
MC	Mailbox Call Handling Flags
MA	Mailbox Access
NC	Message Notification Callouts
DL	Distribution Lists
AAP/AAT	Automated Attendant per Port/Trunk
ER	Error/Activity Log
AL	All Reports
E	To Exit to Main Menu

> To print all data in a report: Press command, space, -P, Enter
> For help on using the "Help" command: Press H, space, H, Enter

About the Options

➤ Port Usage

This report shows how the ports have been used up to the time you ask for the report. You see the following fields on the report:

Port
Shows port number

Tenant
Always shows "1" (since the system supports only 1 tenant)

Lamp Update (count)
Shows how many times the port has been used for Message Waiting Lamp Updates

Reports (cont'd)

About the Options

➤ Port Usage (cont'd)

Incoming Calls (count and total time)
Shows the number of times and the total amount of time a port has been used for incoming outside calls

Message Notifications (count and total time)
Shows the number of times and the total amount of time a port has been used for Message Notification calls

To reset the Port Usage Report (including the date and time at the top):
Press PU, space, -R, Enter. Press Esc.

DEFAULT: N/A
ENTRIES: N/A

➤ Mailbox Options

This report shows the Mailbox Options (third item on CUSTOMIZE DATABASE Menu).

DEFAULT: N/A
ENTRIES: N/A

➤ Mailbox Directory (by Type)

This report shows the mailbox numbers (and their names) grouped by type (e.g., all the Subscriber Mailboxes are grouped together).

DEFAULT: N/A
ENTRIES: N/A

➤ Mailbox List (Numerical)

This report shows you the mailbox numbers numerically, along with their types, names, and Directory Lists.

DEFAULT: N/A
ENTRIES: N/A

➤ Mailbox Message Usage

This report shows the amount of disk space used by the messages in each mailbox. For each mailbox number, you see its name and the following fields:

Total Msg
Shows the total number of messages in the mailbox

Oldest Message
Shows the date and time the oldest message was left

% Disk Used
Shows the percentage of disk space that the mailbox's messages are using

Reports (cont'd)

About the Options

➤ **Mailbox Message Usage (cont'd)**

The bottom of the screen shows the total percentage of disk space available for messages.

DEFAULT: N/A
ENTRIES: N/A

➤ **Mailbox Call Handling Flags**

This report shows the status of the call handling features for a mailbox. For each mailbox number, you see its type and the following fields:

Greeting
Shows whether or not the mailbox greeting is recorded. If it is recorded, the screen shows whether the greeting is on or off.

Page Greeting
Shows whether or not the Paging Message is recorded. If it is, the screen shows whether the Paging Message is on or off.

Name
Shows whether or not a mailbox name is recorded

Call Announcing
Shows whether or not Call Announcing/Screening is on

Call Queuing
Not applicable to NVM-202

Call Waiting
Shows whether or not Call Waiting is on

DEFAULT: N/A
ENTRIES: N/A

➤ **Mailbox Access**

This report shows how many times a mailbox gets accessed (in software versions 1.03 and up) up to the time you ask for the report. This applies to Subscriber, Guest, Announcement (and ACD), Call Routing, Directory Dialing, and Interactive Mailboxes. For each mailbox, you see its extension (if any), type, name and access count. NVM-202 increments the access count as follows:
For Subscriber and Guest Mailboxes: NVM-202 increments the counter when the mailbox is accessed from the Automated Attendant.
For Announcement and ACD Mailboxes: NVM-202 increments the counter when the announcement plays for the first time.
For Call Routing and Directory Dialing Mailboxes: NVM-202 increments the counter when the Welcome Message plays.
For Interactive Mailboxes: NVM-202 increments the counter when the first interactive prompt plays.

DEFAULT: N/A
ENTRIES: N/A

To reset the report (including the date and time at the top):

Press MA, space, -R, Enter. Press Esc.

Reports (cont'd)

About the Options

➤ **Message Notification Callouts**

This report shows information about each Message Notification call (to enable the report, see the heading ***Related Programming***). For each mailbox number with a notification call, you see the following fields:

Port, Date, Time
Shows the port used for the call and the date and time that NVM-202 made the Message Notification call

Total Time
Shows the duration of the Message Notification call

Status
Show the status of the Message Notification call:
BSY Busy
REJ Rejected (person did not dial 1 to accept call)
RNA Ring-No-Answer at a nonpager number
ANS Answered (person accepted or pager service answered)

Callout Number
Shows the Message Notification telephone number

To reset the Callout Report (including the date and time at the top):
Press NC, space, -R, Enter

DEFAULT: N/A
ENTRIES: N/A

➤ **Distribution Lists**

This report shows the Distribution Lists.

DEFAULT: N/A
ENTRIES: N/A

➤ **Automated Attendant per Port/Trunk**

These reports shows how the Automated Attendant answers calls when an Answering Schedule Table is assigned to a port or trunk.

DEFAULT: N/A
ENTRIES: N/A

➤ **Error/Activity Log**

This report shows system errors, activity, "all ports busy" indication (in versions 1.03 and up), resets and the time they occur. The log gets updated every minute.

DEFAULT: N/A
ENTRIES: N/A

➤ **All Reports**

This shows all reports.

DEFAULT: N/A
ENTRIES: N/A

Related Programming

For Message Notification callouts:

Use CUSTOMIZE DATABASE Menu, Message Notification Options
To enable or disable the Message Notification Callout Report

Chapter 10

Using Maintenance and Diagnostics

Maintenance 151
Set System Time 151
Set System Date 152
Set Daily Maintenance Time 152
Run disk defragmentation 153
Set Ports In/Out of Service 153
Set Up Serial Communications Ports 153
Remotely Backup/Restore the Database 155
Shut Down the Voice Mail System 155
Diagnostics 156

Maintenance

Using the MAINTENANCE Menu, you can perform maintenance tasks on the NVM-202 system. You can change the system time, system date, the daily maintenance time, the Voice Mail port status, and the serial communication port parameters. In addition, you can shut down the system, run the disk defragmentation utility, and remotely backup and restore the NVM-202 database.

To perform maintenance tasks from the MAIN Menu:

1. Press MA, then press Enter.
2. Type the password, if the system asks for it, then press Enter.
3. When you see the MAINTENANCE Menu (below):
   Press the command for the desired maintenance function, then press Enter. The maintenance functions are described below.

```
******* MAINTENANCE Menu *******
Press command below,      To:
then press Enter:

      T                   Set System Time
      D                   Set System Date
      DM                  Set Daily Maintenance Time
      DD                  Run disk defragmentation
      PS                  Set Ports In/Out of Service
      COMM, space, port # Set Up Serial Communication Ports
      BR                  Remotely Backup/Restore the Database
      SD                  Shut Down the Voice Mail System
      E                   Exit to MAIN Menu

> For help on using the "Help" command: Press H, space, H, Enter
```

About the Options

➤ **Set System Time**

This menu item lets you view and/or set the time for the NVM-202 system. See also *Setting the System Time* in Chapter 11.

DEFAULT: Not set
ENTRIES: **To view:**
T, Enter

To set:
T, space, HH:MM:SS, Enter

HH = hour (00-23)
MM = minutes (00-59)
SS = seconds (00-59)

Maintenance (cont'd)

About the Options

➤ Set System Date

This menu item lets you view and/or set the date for the NVM-202 system. See also *Setting the System Date* in Chapter 11.

DEFAULT: Not set
ENTRIES: **To view:**
D, Enter

To set:
D, space, MM/DD/YY, Enter

MM = month (01-12)
DD = day (01-31)
YY = year (last two digits)

➤ Set Daily Maintenance Time

This menu item determines whether NVM-202 automatically shuts down to perform maintenance tasks on its hard disk. NVM-202 can perform two types of maintenance tasks:

- **Daily Maintenance** checks and corrects hardware disk errors. This occurs once a day at the programmed time.
- **Weekly Maintenance** defragments the disk files to optimize call processing time. This occurs once a week at the programmed date and time.

No one can use NVM-202 while the maintenance tasks are taking place. When they are complete, NVM-202 restarts and you see the MAIN Menu on the terminal.

If the programmed maintenance time arrives and an NVM-202 port is busy, NVM-202 waits 5 minutes. If any port is still busy at the end of 5 minutes, NVM-202 skips the maintenance tasks.

After you select Set Daily Maintenance Time on the MAINTENANCE Menu, you see the fields below:

Daily maintenance time
This option lets you set the time of day that daily or weekly maintenance should occur.

DEFAULT: None
ENTRIES: HH:MM
N = None (no daily or weekly maintenance)

HH = hour (00-23)
MM = minutes (00-59)

Maintenance (cont'd)

About the Options

➤ Set Daily Maintenance Time (cont'd)

Day to run full Disk maintenance
This option lets you select the day that weekly maintenance (disk defragmentation) should occur.

DEFAULT: None
ENTRIES: Su-Sa (e.g., Su = Sunday)
N - None (no disk defragmentation)

You can also set the maintenance time and day using *System Options* on the CUSTOMIZE DATABASE Menu (see Chapter 5).

➤ Run disk defragmentation

This menu item lets you shut down NVM-202 and run the defragmentation utility. The defragmentation utility defragments the NVM-202 hard disk files to optimize call processing time. No one can use NVM-202 while the defragmentation is taking place. When the defragmentation is complete, NVM-202 restarts and you see the MAIN Menu on the terminal.

If a Voice Mail port is busy when you attempt to run the disk defragmentation, NVM-202 lets you know. If you go ahead with the defragmentation regardless of the activity, all Voice Mail calls in progress get disconnected.

DEFAULT: N/A
ENTRIES: Y - Yes (Go ahead with defragmentation)
N - No (Abort the defragmentation)

➤ Set Ports In/Out of Service

This menu item lets you take a Voice Mail port in or out of service.

DEFAULT: All installed ports are In Service
ENTRIES: Y - Yes (In Service)
N - No (Out of Service)

You can also take ports in or out of service using *Port Options* on the CUSTOMIZE DATABASE Menu (see Chapter 5).

➤ Set Up Serial Communication Ports

This menu item lets you set the communication parameters for the serial port (COM 1) on the NVM-202 cabinet. For the location of COM 1, see page 13.

Maintenance (cont'd)

About the Options ➤ **Set Up Serial Communication Ports (cont'd)**

Baud Rate
This option lets you set the baud rate for the COM port.

DEFAULT: 1200 baud
ENTRIES: 1 - 300 baud
2 - 1200 baud
3 - 2400 baud
4 - 4800 baud
5 - 9600 baud
6 - 19200 baud

Parity
This option lets you set the parity for the COM port.

DEFAULT: No parity
ENTRIES: N - No parity
O - Odd
E - Even

Number of Stop Bits
This option lets you set the number of stop bits for the COM port.

DEFAULT: 1
ENTRIES: 1-2

Word length
This option let you set the word length for the COM port.

DEFAULT: 8 data bits
ENTRIES: 5-8 bits

CTS/RTS flow control
This option enables or disables CTS/RTS flow control for the COM port.

DEFAULT: No
ENTRIES: Y - Yes
N - No

XON/XOFF flow control
This option enables or disables XON/XOFF flow control for the COM port.

DEFAULT: Yes
ENTRIES: Y - Yes
N - No

Maintenance (cont'd)

About the Options

➤ **Set Up Serial Communication Ports (cont'd)**

Modem installed
This option lets NVM-202 know if a modem is installed on the COM port. If you enter Y, you see the options below.

DEFAULT: Yes
ENTRIES: Y - Yes
N - No

Modem initialization string
This is the initialization string NVM-202 can send to the modem, if desired.

DEFAULT: AT&FS0=1S2=255E0Q1&C1&D2&W
ENTRIES: Up to 40 characters (see the manual for your modem)
N - None

Do you wish to send the Modem initialization string?
If you enter Y, NVM-202 sends the string to the modem.

DEFAULT: Not set
ENTRIES: Y - Yes
N - No

➤ **Remotely Backup/Restore the Database**
(future)

➤ **Shut Down the Voice Mail System**
This menu item shuts down NVM-202. You **must** shut down NVM-202 before you turn off the NVM-202 system power or reset the system (by pressing the Reset button). If you turn off the power or reset the system without first shutting it down, you may corrupt the NVM-202 database.

If you try to shut down NVM-202 and any ports are active, NVM-202 lets you know. If you continue with the shut down anyway, NVM-202 disconnects the calls on the active ports.

To re-start the Voice Mail system after you shut it down, you must turn its power off, then on, or you must press the Reset button.

You can also shut down NVM-202 by using the System Administrator menu (see Chapter 11).

DEFAULT: N/A
ENTRIES: Press SD, Enter. Then follow the instructions on the screen.

Related Programming

For Setup Serial Communication Ports:
See *Connecting a Modem to NVM-202* in Chapter 2.

Diagnostics

Using the DIAGNOSTICS Menu, you can monitor the activity of each port as it happens.

To use Diagnostics from the MAIN Menu:

1. Press DI, then press Enter.
2. Type the password, if the system asks for it, then press Enter.
3. When you see the DIAGNOSTICS Menu (below):
   Press PA, then press Enter.
   You see the port activity screen. Each field is explained below.

```
******* DIAGNOSTICS Menu *******
Press command below,          To show:
then press Enter:

    PA                        Port Activity
    E                         To Exit to Main Menu

> For help on using the "Help" command: Press H, space, H, Enter
```

About the Options

➤ Port

This field shows the port number.

DEFAULT: N/A
ENTRIES: N/A

➤ Call State

This field shows the state of a call that the port is handling.

Not Inst
Port card not installed

Starting
Port is initializing

On Hook
Port is idle (ready to receive ring)

Lamp
Updating Message Waiting Lamp

Incoming
Handling incoming call

Error
Fixing an error

Closed
Out of service

Notify
Sending Message Notification call

DEFAULT: N/A
ENTRIES: N/A

Diagnostics (cont'd)

About the Options

➤ **Line Card State**

This shows the state of the port card.

Idle
Idle

Recording
Recording a message, greeting, etc.

Playing
Playing a message or voice prompt

Get DTMF
Waiting for DTMF tones

Off Hook
Going off hook to answer a call

Send DTMF
Sending (dialing) DTMF tones

On Hook
Going on hook to terminate a call

Do PCPM
Doing PCPM (Programmed Call Progress Monitoring)

DEFAULT: N/A
ENTRIES: N/A

➤ **Func Code**

These are the codes that can appear in the Func Code column and their meaning.

1	System Initialization
2	Adjust Rate and Gain
3	System Halt
4	Channel Halt
5	Get Channel Status
6	On/Off Hook
7	Set Channel Even Mask
8	Reset DTMF Buffer
9	Get DTMF Digit
10	Record Data
11	Play Data
12	Record Data to Disk
13	Play Data from Disk
14	Dial Digit String
15	Read DTMF String
16	System Status
17	Start PCPM Analysis
18	Driver Access
19	Play indexed file
20	Set PCPM Frequency
21	Set PCPM Tones
28	Set Global Parameters
29	Set Channel Parameters
30	Callout

Diagnostics (cont'd)

About the Options

➤ **Func Code (cont'd)**

31 Enable DTMF
32 Version/Revision Level
33 Wait
34 Record User Buffer
35 Play User Buffer
36 Get EMS Count
37 Set EMS Count

DEFAULT: N/A
ENTRIES: N/A

➤ **Mailbox**

This is the mailbox using the port.

➤ **Tone type**

These are the types of tones being transmitted on the port.

Busy
Outbound call, detected busy
No Answr
Outbound call, detected no-answer
No Tone
Outbound call, no tone detected
Connect
Outbound call, answered
Opr Int
Outbound call, intercepted by operator
Reorder
Reorder tone
DialTone
Dial tone

DEFAULT: N/A
ENTRIES: N/A

➤ **Prompt**

These are the voice prompts playing on the port.

DEFAULT: N/A
ENTRIES: N/A

➤ **Digits**

These are the digits being dialed on the port.

DEFAULT: N/A
ENTRIES: N/A

Related Programming

N/A

Chapter 11

Using System Administrator Options

Recording a Broadcast Message....161
Recording a Welcome Message....162
Recording an Instruction Menu....164
Recording Directory Dialing Message....166
Recording an Announcement Message....168
Recording Mailbox Names....169
Overriding the Answering Schedule....170
Customizing the System Voice Prompts....171
Setting the System Time....172
Setting the System Date....173
Getting the System Version Number....174
Preparing for Power-Down: Shutting Down the System....175

Recording a Broadcast Message

Using a System Administrator Mailbox, you can record a message that will broadcast to all Subscriber, Message Center, Guest Mailbox, and Future Delivery Mailboxes. NVM-202 plays the Broadcast Message when a person calls one of these mailboxes, right before the prompt, ***You have ___ messages.***

About the Options

Using a System Administrator Mailbox, you can record a BRoadcast message as follows:

1. Call System Administrator Mailbox:

   From a System Administrator extension:

   Lift handset + Press Message key (or dial * 6 if no Message key) + Dial security code (if required)

   From a non-System Administrator extension:

   Get intercom dial tone + Dial NVM-202 master extension + Wait for answer + Dial System Administrator Mailbox number + Dial security code (if required)

   From outside the company through the Automated Attendant:
   Dial NVM-202 telephone number + Wait for company greeting + Press # + Dial System Administrator Mailbox number + Dial security code (if required).

2. Press **S A** (7 2).
3. Press **B R** (2 7).
4. Follow the voice prompts.

Related Programming

Use CUSTOMIZE DATABASE Menu, Mailbox Options
To convert a Subscriber Mailbox into a System Administrator Mailbox

Use CUSTOMIZE DATABASE Menu, System Options
To set the length of the Broadcast Message using the option, *Subscriber msg length*

Recording a Welcome Message

Using a System Administrator Mailbox, you can record a Welcome Message for a Call Routing, Message Center, or Directory Dialing Mailbox. The Welcome Message is used to greet the caller.

For a Call Routing Mailbox, NVM-202 plays the Welcome Message, then the Instruction Menu. The default Welcome Message for any Call Routing Mailbox is this: ***Thank you for calling.*** If you erase a customized Welcome Message, NVM-202 reassigns the default.

For a Message Center Mailbox, NVM-202 plays the Welcome Message, then a beep. The beep indicates the caller can leave a message. There is no default Welcome Message for a Message Center Mailbox. In the Welcome Message for a Message Center Mailbox, you may also wish to include information about dialing # and 0. For more information, see *Message Center Mailboxes* in Chapter 6.

For a Directory Dialing Mailbox, NVM-202 plays the Welcome Message, then Instruction Menu, then the Directory Dialing Message. There is no default Welcome Message for a Directory Dialing Mailbox.

If you wish, you can record one Welcome Message, then copy it to other mailboxes. Just follow the voice prompts after step 3 below.

About the Options

Using a System Administrator Mailbox, you can record a Welcome Message as follows:

1. Call System Administrator Mailbox:

   From a System Administrator extension:

   Lift handset + Press Message key (or dial * 6 if no Message key) + Dial security code (if required)

   From a non-System Administrator extension:

   Get intercom dial tone + Dial NVM-202 master extension + Wait for answer + Dial System Administrator Mailbox number + Dial security code (if required)

   From outside the company through the Automated Attendant:
   Dial NVM-202 telephone number + Wait for company greeting + Press # + Dial System Administrator Mailbox number + Dial security code (if required).

2. Press **S A** (7 2).
3. Press **W** (9).
4. Follow the voice prompts.

Related Programming

Use CUSTOMIZE DATABASE Menu, Mailbox Options
To convert a Subscriber Mailbox into a System Administrator Mailbox

Recording a Welcome Message (cont'd)

Related Programming

Use CUSTOMIZE DATABASE Menu, Mailbox Options
To create Call Routing, Message Center, and Directory Dialing Mailboxes

For more information on these mailboxes, see Chapter 6.

Use CUSTOMIZE DATABASE Menu, System Options
To set the length of the Welcome Message using the option, *Subscriber msg length*

Recording an Instruction Menu

Using a System Administrator Mailbox, you can record an Instruction Menu for a Call Routing or Directory Dialing Mailbox. The Instruction Menu tells a caller what to dial to route their call.

For a Call Routing Mailbox, NVM-202 plays the Welcome Message, then the Instruction Menu. The default Instruction Menu for any Call Routing Mailbox is this: ***If you are calling from a touch tone phone, please dial the extension number you wish to reach or dial 0 for assistance. If you are calling from a rotary dial phone, please stay on the line for assistance.*** If the caller does not dial anything or makes a mistake, NVM-202 repeats the Instruction Menu. If you erase a customized Instruction Menu for a Call Routing Mailbox, NVM-202 reassigns the default.

For a Directory Dialing Mailbox, NVM-202 plays the Welcome Message, Instruction Menu, then the Directory Dialing Message. If the person does not dial anything or makes a mistake, NVM-202 repeats the Directory Dialing Message, not the Instruction Menu. Since you must record a Directory Dialing Message to explain the caller's dialing options, you may not wish to record an Instruction Menu. Or, you may wish to record an Instruction Menu that contains information you would like NVM-202 to play only once -- for example, information about pressing the pound key (see also *Recording a Directory Dialing Message* in this chapter). There is no default Instruction Menu for a Directory Dialing Mailbox.

If you wish, you can record an Instruction Menu for one Call Routing or Directory Dialing Mailbox, then copy it to other Call Routing or Directory Dialing Mailboxes. Just follow the voice prompts after you do step 3 below.

About the Options

Using a System Administrator Mailbox, you can record an Instruction Menu as follows:

1. Call System Administrator Mailbox:

   From a System Administrator extension:

   Lift handset + Press Message key (or dial * 6 if no Message key) + Dial security code (if required)

   From a non-System Administrator extension:

   Get intercom dial tone + Dial NVM-202 master extension + Wait for answer + Dial System Administrator Mailbox number + Dial security code (if required)

   From outside the company through the Automated Attendant:

   Dial NVM-202 telephone number + Wait for company greeting + Press # + Dial System Administrator Mailbox number + Dial security code (if required).
2. Press **S A** (7 2).
3. Press **I** (4).
4. Follow the voice prompts.

Recording an Instruction Menu (cont'd)

Related Programming

Use CUSTOMIZE DATABASE Menu, Mailbox Options
To convert a Subscriber Mailbox into a System Administrator Mailbox

Use CUSTOMIZE DATABASE Menu, Mailbox Options
To create Call Routing and Directory Dialing Mailboxes

For more information on these mailboxes, see Chapter 6

Use CUSTOMIZE DATABASE Menu, System Options
To set the length of the Instruction Menu using the option, *Subscriber msg length*

Recording a Directory Dialing Message

Using a System Administrator Mailbox, you can record a Directory Dialing Message for:

- A Directory Dialing Mailbox. See also *Directory Dialing Mailboxes* in Chapter 6.
- A Call Routing Mailbox that is programmed for an Extension Name Directory. See also *Route to an Extension Name Directory* in Chapter 4.

A Directory Dialing Message for a Directory Dialing Mailbox tells a caller what letters to dial to call an extension or mailbox. If, for example, you set up a Directory Dialing Mailbox to provide information about new products, you may wish to record a message something like this: ***For information on new software products, dial SOFTWARE, then press the pound key. For information on hardware products, dial HARDWARE, then press the pound key. To exit, press only the pound key.*** To shorten the message, you may wish to include information about pressing the pound key in the Welcome Message or Instruction Menu for the Directory Dialing Mailbox. This way, the information about the pound key will play only once. For more information, see *Recording a Welcome Message* and *Recording an Instruction Menu* in this chapter.

A Directory Dialing Message that you record for a Call Routing Mailbox replaces the default recording, which is: ***Please enter ____ or more letters of the person's name, starting with their first (last) name, then press the pound key. To enter a Q or Z, press 1. To exit this directory, press only the pound key.*** If you erase a customized Directory Dialing Message, NVM-202 will revert back to using the default one.

Other points to remember when you customize a Directory Dialing Message are these:

- Since it is not necessary to press the pound key after dialing letters, you may wish to exclude that information from a Directory Dialing Message. NVM-202 will process the call anyway, after the pre-programmed *Time limit for dialing commands* (see *System Options* in Chapter 5).
- Since a caller must dial a minimum number of letters in order for NVM-202 to process the call, you must include that information in the Directory Dialing Message.
- Since a caller must dial 1 for a Q or Z, you must include that information in the Directory Dialing Message unless none of the mailbox names include a Q or Z.
- If the names that can be dialed include numbers, make sure to let the callers know they can dial numbers.
- Make sure to let callers know they can exit the Directory Dialing Mailbox by pressing only the pound key. Remember: Pressing the pound key reroutes the caller using the Key 0 Action of the Directory Dialing Mailbox's Dial Action Table.

Recording a Directory Dialing Message (cont'd)

About the Options

Using a System Administrator Mailbox, you can record a Directory Dialing message as follows:

1. Call System Administrator Mailbox:

   From a System Administrator extension:

   Lift handset + Press Message key (or dial * 6 if no Message key) + Dial security code (if required)

   From a non-System Administrator extension:

   Get intercom dial tone + Dial NVM-202 master extension + Wait for answer + Dial System Administrator Mailbox number + Dial security code (if required)

   From outside the company through the Automated Attendant:
   Dial NVM-202 telephone number + Wait for company greeting + Press # + Dial System Administrator Mailbox number + Dial security code (if required).

2. Press **S A** (7 2).
3. Press **D D** (3 3).
4. Follow the voice prompts.

Related Programming

Use CUSTOMIZE DATABASE Menu, Mailbox Options
To convert a Subscriber Mailbox into a System Administrator Mailbox

Use CUSTOMIZE DATABASE Menu, Mailbox Options
To create and customize Directory Dialing Mailboxes and Call Routing Mailboxes

For more information on Directory Dialing Mailboxes, see Chapter 6. For more information on programming a Call Routing Mailbox for an Extension Name Directory, see *Route to an Extension Name Directory* in Chapter 4.

Use CUSTOMIZE DATABASE Menu, System Options
To set the length of the Directory Dialing Message using the option, *Subscriber Message Length*

To set the minimum number of letters a person must dial

Use System Administrator Options (Chapter 11)
To record a Welcome Message and Instruction Menu for the Call Routing and Directory Dialing Mailboxes

To record mailbox names

Recording an Announcement Message

Using a System Administrator Mailbox, you can record an "information only" message for an Announcement or Automatic Call Distribution (ACD) Mailbox (ACD Mailboxes may be available in the future). A message for an Announcement Mailbox might contain, for example, information about product updates, or a weekly business schedule, etc. A message for an ACD Mailbox may say, ***All our technicians are currently busy helping customers. Please hold for the next available technician.***

About the Options

Using a System Administrator Mailbox, you can record an ANnouncement Message as follows:

1. Call System Administrator Mailbox:

   From a System Administrator extension:

   Lift handset + Press Message key (or dial * 6 if no Message key) + Dial security code (if required)

   From a non-System Administrator extension:

   Get intercom dial tone + Dial NVM-202 master extension + Wait for answer + Dial System Administrator Mailbox number + Dial security code (if required)

   From outside the company through the Automated Attendant:
   Dial NVM-202 telephone number + Wait for company greeting + Press # + Dial System Administrator Mailbox number + Dial security code (if required).

2. Press **S A** (7 2).
3. Press **A N** (2 6).
4. Follow the voice prompts.

Related Programming

Use CUSTOMIZE DATABASE Menu, Mailbox Options
To convert a Subscriber Mailbox into a System Administrator Mailbox

To create Announcement and ACD Mailboxes

Use CUSTOMIZE DATABASE Menu, System Options
To set the length of the Announcement Message using the option, *Subscriber msg length*

Recording Mailbox Names

Using a System Administrator Mailbox, you can record a name for all mailbox types except: Trunk, Future Delivery, and Distribution. The name can be up to 10 seconds long. You should record a unique name for each mailbox.

NVM-202 plays the name in voice prompts that would otherwise play the mailbox or corresponding extension number. For example: Suppose you record the name "Joe Smith" for Subscriber Mailbox 303. If an Automated Attendant transfer to extension 303 is incomplete because the extension is busy, NVM-202 says, ***Joe Smith is busy.*** instead of, ***Extension 303 is busy.***

NVM-202 also plays the mailbox name for the Directory Dialing feature. For more information, see *Directory Dialing Mailboxes* in Chapter 6 and *Route to an Extension Name Directory* in Chapter 4.

If a person records a name for a mailbox by using the instructions in the User's Guide, that name overrides the name you record through the System Administrator Mailbox, and vice versa.

About the Options

Using a System Administrator Mailbox, you can record a Mailbox Name as follows:

1. Call System Administrator Mailbox:

   From a System Administrator extension:

   Lift handset + Press Message key (or dial * 6 if no Message key) + Dial security code (if required)

   From a non-System Administrator extension:

   Get intercom dial tone + Dial NVM-202 master extension + Wait for answer + Dial System Administrator Mailbox number + Dial security code (if required)

   From outside the company through the Automated Attendant:
   Dial NVM-202 telephone number + Wait for company greeting + Press # + Dial System Administrator Mailbox number + Dial security code (if required).

2. Press **S A** (7 2).
3. Press **N** (6).
4. Follow the voice prompts.

Related Programming

Use CUSTOMIZE DATABASE Menu, Mailbox Options

To create mailboxes

To convert a Subscriber Mailbox into a System Administrator Mailbox

Overriding the Answering Schedule

Using a System Administrator Mailbox, you can override the answering schedule that is in effect. This means that you can re-route incoming calls to any Call Routing, Message Center, Announcement, Subscriber, or Directory Dialing Mailbox you choose. The "override mailbox" answers the calls until you turn Answering Schedule Override off. For example, if the company must close due to bad weather, you can re-route calls to an Announcement Mailbox that plays, ***Our offices are closed due to the inclement weather. Please call again tomorrow.*** For more information on answering schedules, see *How the Automated Attendant Answers calls* in Chapter 4.

By default, NVM-202 sends all calls to Call Routing Mailbox 410 when the System Administrator turns on Answering Schedule Override. Call Routing Mailbox 410 uses Dial Action Table 3. For the default routing options on Dial Action Table 3, see *Dial Action Table* in Chapter 7.

About the Options

Using a System Administrator Mailbox, you can activate Answering Schedule Override as follows:

1. Call System Administrator Mailbox:

   From a System Administrator extension:

   Lift handset + Press Message key (or dial * 6 if no Message key) + Dial security code (if required)

   From a non-System Administrator extension:

   Get intercom dial tone + Dial NVM-202 master extension + Wait for answer + Dial System Administrator Mailbox number + Dial security code (if required)

   From outside the company through the Automated Attendant:
   Dial NVM-202 telephone number + Wait for company greeting + Press # + Dial System Administrator Mailbox number + Dial security code (if required).

2. Press **S A** (7 2).
3. Press **S O** (7 6).
4. Follow the voice prompts.

Related Programming

Use CUSTOMIZE DATABASE Menu, Mailbox Options
To convert a Subscriber Mailbox into a System Administrator Mailbox

To create the type of override mailbox you want

Use System Administrator Options in this chapter
To record the message for the override mailbox

Customizing the System Voice Prompts

Using a System Administrator Mailbox, you can customize (re-record) all the voice prompts in the NVM-202 system. If you record a substitute for a default voice prompt, then erase the substitute, NVM-202 reverts back to using the default prompt. You will find the list of system voice prompts in Appendix A.

About the Options

Using a System Administrator Mailbox, you can use the System Prompt Customization feature as follows:

1. Call System Administrator Mailbox:

   From a System Administrator extension:

   Lift handset + Press Message key (or dial * 6 if no Message key) + Dial security code (if required)

   From a non-System Administrator extension:

   Get intercom dial tone + Dial NVM-202 master extension + Wait for answer + Dial System Administrator Mailbox number + Dial security code (if required)

   From outside the company through the Automated Attendant:
   Dial NVM-202 telephone number + Wait for company greeting + Press # + Dial System Administrator Mailbox number + Dial security code (if required).

2. Press **S A** (7 2).
3. Press **P C** (7 2).
4. Follow the voice prompts.

Related Programming

Use CUSTOMIZE DATABASE Menu, Mailbox Options
To convert a Subscriber Mailbox into a System Administrator Mailbox

Setting the System Time

Using a System Administrator Mailbox, you can set the time for the NVM-202 system. By default, the system time is set for Eastern Standard Time.

About the Options

Using a System Administrator Mailbox, you can set the Time for the NVM-202 system as follows:

1. Call System Administrator Mailbox:

   From a System Administrator extension:

   Lift handset + Press Message key (or dial * 6 if no Message key) + Dial security code (if required)

   From a non-System Administrator extension:

   Get intercom dial tone + Dial NVM-202 master extension + Wait for answer + Dial System Administrator Mailbox number + Dial security code (if required)

   From outside the company through the Automated Attendant:
   Dial NVM-202 telephone number + Wait for company greeting + Press # + Dial System Administrator Mailbox number + Dial security code (if required).

2. Press **S A** (7 2).
3. Press **T I** (7 2).
4. Follow the voice prompts.

Related Programming

Use CUSTOMIZE DATABASE Menu, Mailbox Options
To convert a Subscriber Mailbox into a System Administrator Mailbox

Use MAINTENANCE Menu, Set System Time
To set the system time through the terminal

Setting the System Date

Using a System Administrator Mailbox, you can set the date for the NVM-202 system. By default, the date is set for the current date in the U.S.A.

About the Options

Using a System Administrator Mailbox, you can set the DaTe for the NVM-202 system as follows:

1. Call System Administrator Mailbox:

   From a System Administrator extension:

   Lift handset + Press Message key (or dial * 6 if no Message key) + Dial security code (if required)

   From a non-System Administrator extension:

   Get intercom dial tone + Dial NVM-202 master extension + Wait for answer + Dial System Administrator Mailbox number + Dial security code (if required)

   From outside the company through the Automated Attendant:
   Dial NVM-202 telephone number + Wait for company greeting + Press # + Dial System Administrator Mailbox number + Dial security code (if required).

2. Press **S A** (7 2).
3. Press **D T** (3 8).
4. Follow the voice prompts.

Related Programming

Use CUSTOMIZE DATABASE Menu, Mailbox Options
To convert a Subscriber Mailbox into a System Administrator Mailbox

Use MAINTENANCE Menu, Set System Date
To set the system date through the terminal

Getting the System Version Number

Using a System Administrator Mailbox, you can hear the version (revision) number for the NVM-202 system software.

About the Options

Using a System Administrator Mailbox, you can hear the NVM-202 System Version number as follows:

1. Call System Administrator Mailbox:

   From a System Administrator extension:

   Lift handset + Press Message key (or dial * 6 if no Message key) + Dial security code (if required)

   From a non-System Administrator extension:

   Get intercom dial tone + Dial NVM-202 master extension + Wait for answer + Dial System Administrator Mailbox number + Dial security code (if required)

   From outside the company through the Automated Attendant:
   Dial NVM-202 telephone number + Wait for company greeting + Press # + Dial System Administrator Mailbox number + Dial security code (if required).

2. Press **S A** (7 2).
3. Press **S V** (7 8).
4. Follow the voice prompts.

Related Programming

Use CUSTOMIZE DATABASE Menu, Mailbox Options
To convert a Subscriber Mailbox into a System Administrator Mailbox

Preparing for Power-Down: Shutting Down the System

Using a System Administrator Mailbox, you can shut down the NVM-202 system. You must shut down NVM-202 before you reset NVM-202 or before you turn off NVM-202 power. If you do not, the NVM-202 database may get corrupted.

If there is activity in the system when you start the shutdown, NVM-202 gives you three options: you can wait until activity ceases, go ahead with the shutdown regardless of the activity, or abort the shutdown. If you go ahead with the shutdown, NVM-202 disconnects any Voice Mail calls in progress.

You can shut down the NVM-202 only from a System Administrator Mailbox that has been programmed with a Security Code. To assign a Security Code to a mailbox, see the User's Guide.

About the Options

Using a System Administrator Mailbox, you can prepare NVM-202 for Power-Down as follows:

1. Call System Administrator Mailbox:

   From a System Administrator extension:

   Lift handset + Press Message key (or dial * 6 if no Message key) + Dial security code

   From a non-System Administrator extension:

   Get intercom dial tone + Dial NVM-202 master extension + Wait for answer + Dial System Administrator Mailbox number + Dial security code

   From outside the company through the Automated Attendant:
   Dial NVM-202 telephone number + Wait for company greeting + Press # + Dial System Administrator Mailbox number + Dial security code.

2. Press **S A** (7 2).
3. Press **P D** (7 3).
4. Follow the voice prompts.

Related Programming

Use CUSTOMIZE DATABASE Menu, Mailbox Options
To convert a Subscriber Mailbox into a System Administrator Mailbox

Use MAINTENANCE Menu, Shut Down the Voice Mail System
To shut down NVM-202 from the terminal

Appendix A

NVM-202 System Voice Prompts.....179

NVM-202 System Voice Prompts

The list below contains all the voice prompts in the NVM-202 system. You can re-record them in someone else's voice (see *Customizing the System Voice Prompts* in Chapter 11). Do not record the prompt number. When you see a blank space, this means NVM-202 will fill it in by playing an extension number, name, mailbox number, or part of another prompt. When you see."Not programmable" next to a prompt number, this means you cannot record anything for that prompt number.

1. Thank you for calling.

2. Please hold a moment.

3. Please enter the mailbox number associated with the name.

4. Extension _____

5. Zero

6. One

7. Two

8. Three

9. Four

10. Five

11. Six

12. Seven

13. Eight

14. Nine

15. Ten

16. Eleven

17. Twelve

18. Thirteen

19. Fourteen

20. Fifteen

21. Sixteen

22. Seventeen

23. Eighteen

24. Nineteen

25. _____ is not available.

26. Start recording at the tone and press the pound key when you are done.

27. The record feature is not available at the moment because the system is storing the maximum number of messages. Please notify the system administrator.

28. Recording has been paused due to silence.

29. Recording has been paused.
To continue recording, press the star key.

30. Recording has been paused.
To continue recording, press the star key.
To listen to the message you recorded, press L.
To erase the message and record a new one, press E.
To send the message, press the pound key or hang up.

31. The message has been sent.

32. That is an invalid entry.

33. Mailbox _____

34. You have reached the recording limit.

35. Start recording at the tone. When you are done, press the pound key or hang up.

36. There is a problem with the system disk. Please notify the system administrator.

37. There is a problem with the system line card. Please notify the system administrator.

38. There is a problem with system memory. Please notify the system administrator.

39. Please enter your mailbox number.

40. Please enter your security code.

41. You have _____

42. _____ message.

43. _____ messages.

44. Ready

45. For a help message, press zero.

46. No

47. _____ is busy.

48. _____ does not answer.

49. To leave a message, press one.
For other options, press two.

50. Connecting

51. If you are calling from a Touch Tone phone, please dial the extension number you wish to reach or dial zero for assistance. If you are calling from a rotary dial phone, please stay on the line for assistance.

52. Please try again.

53. _____ does not exist.

54. Goodbye.

55. Star

56. Pound

57. Twenty

58. Thirty

59. Forty

60. Fifty

61. Sixty

62. Seventy

63. Eighty

64. Ninety

65. Hundred

66. Thousand

67. Million

68. Billion

69. Your mailbox is almost full.

70. Your mailbox is full.

71. Please erase some messages.

72. There are no more messages. Ready to play the first message.

73. To exit your mailbox, press X again.
To return to the automated attendant, press the star key.
To return to your mailbox, press the pound key.

74. _____ messages will be erased when you exit your mailbox.

75. The message will be erased when you exit your mailbox.

76. The message has been saved.

77. from _____.

78. There are no more messages. Ready to play the last message.

79. Volume Up

80. This is maximum volume.

81. Volume Down

82. This is minimum volume.

83. This is normal volume.

84. Recording

85. Hello. I have a call for _____ .

86. Not programmable

87. To listen to the name, press L.
To record a new name, press R.
To erase the name, press E.
To go to another mailbox, press the pound key.
To exit this feature, press the pound key twice.

88. There is no name recorded for this mailbox.
To record a name, press R.
To go to another mailbox, press the pound key.
To exit this feature, press the pound key twice.

89. AM

90. PM

91. January

92. February

93. March

94. April

95. May

96. June

97. July

98. August

99. September

100. October

101. November

102. December

103. To accept this call, press 1. Otherwise, hang up.

104. The message has been erased.

105. Listening has been paused. To continue listening, press the star key.

106. Please enter the mailbox numbers to receive this message, up to ten.

107. Enter another mailbox number or do one of the following:
To send the message, press the pound key.
To cancel the previous mailbox number, press the star key.
To erase the message, press the star key twice.

108. That mailbox number has been canceled.

109. You have already entered the maximum number of mailboxes.

110. That mailbox does not exist.

111. That mailbox cannot receive messages.

112. That mailbox is full.

113. That message has not been sent.

114. That distribution list is empty.

115. The record feature is not available at the moment because there is no more space on the system disk. Please notify the system administrator.

116. To exit your mailbox, press X again.
To return to your mailbox, press the pound key.

117. To send the message, press the pound key.
To erase the message, press the star key twice.

118. The greeting is on.

119. The greeting is off.

120. The greeting has been erased.

121. To listen to your greeting, press L.
To turn your greeting off or on, press O.
To record a new greeting, press R.
To exit this feature, press the pound key.

122. There is no greeting for your mailbox.
To record a greeting, press R.
To exit this feature, press the pound key.

123. Please enter that person's mailbox number.

124. These are the options you have while listening to a recording:

To backup five seconds and listen, press B.
To backup to the beginning and listen, press B B.
To go ahead five seconds and listen, press G.
To pause while listening, press the star key.
To continue listening after a pause, press the star key.
To turn the volume up, press V U.
To turn the volume down, press V D.
To restore the volume to normal, press V N.
To exit the listen mode, press the pound key.

125. These are the options you have while making a recording:

To backup five seconds and listen to the recording, press B.
To backup to the beginning and listen to the recording, press B B.
To pause the recording, press the star key.
To continue recording after a pause, press the star key.
To erase the recording, press E.
To end recording, press the pound key.

126. To listen to your name, press L.
To record a new name, press R.
To erase your name, press E.
To exit this feature, press the pound key.

127. There is no name recorded for your mailbox.
To record your name, press R.
To exit this feature, press the pound key.

128. At the tone, please record your name so that I may announce your call. When you are done recording, press the pound key.

129. The name has been erased.

130. Not programmable

131. Not programmable

132. To listen to the broadcast message, press L.
To record a new broadcast message, press R.
To erase the broadcast message, press E.
To exit this feature, press the pound key.

133. There is no broadcast message.
To record a broadcast message, press R.
To exit this feature, press the pound key.

134. Not programmable

135. The broadcast message has been erased.

136. To listen to the welcome message, press L.
To record a new welcome message, press R.
To copy the welcome message from another mailbox, press C.
To erase the welcome message, press E.
To go to another welcome message mailbox, press the pound key.
To exit this feature, press the pound key twice.

137. There is no welcome message for this mailbox.
To record a welcome message, press R.
To copy the welcome message from another mailbox, press C.
To go to another welcome message mailbox, press the pound key.
To exit this feature, press the pound key twice.

138. To listen to your messages, press L.
To record and send a message, press R S.
For the complete Main Menu of features, press zero.

139. The welcome message has been erased.

140. To listen to the instruction menu, press L.
To record a new instruction menu, press R.
To copy the instruction menu from another mailbox, press C.
To erase the instruction menu, press E.
To go to another instruction menu mailbox, press the pound key.
To exit this feature, press the pound key twice.

141. There is no instruction menu for this mailbox.
To record an instruction menu, press R.
To copy the instruction menu from another mailbox, press C.
To go to another instruction menu mailbox, press the pound key.
To exit this feature, press the pound key twice.

142. To record and send a message, press R S.
For the complete Main Menu of features, press zero.

143. The instruction menu has been erased.

144. The mailbox number to receive your reply is not known.

145. Not programmable

146. Your call cannot go through because the extension number for that message is not known.

147. To record a reply, press R E.

148. If you wish, you can record a comment at the tone and press the pound key when you are done. Otherwise, press only the pound key.

149. You may not forward this message because it has already been forwarded to you.

150. Enter the mailbox number of the message recipient you wish to check on.

151. All your messages have been listened to.

152. _____ messages have not been listened to.

153. _____ message has not been listened to.

154. Not programmable

155. Enter your new security code, then press the pound key.
Or, to exit this feature, press only the pound key.

156. You have entered too many digits. Please try again.

157. Your security code has been erased.

158. Your new security code is _____ .

159. If this is correct, press C.
If this is incorrect, press I.

160. Your security code has been changed.

161. Your security code has not been changed.

162. Message notification is on from _____

163. until _____

164. notifying you of messages from _____

165. notifying you of all messages _____

166. at this number _____

167. at this radio pager number _____

168. at this digital pager number _____

169. Message notification is off.

170. To turn message notification off, press O.
To change message notification options, press C.
To exit, press the pound key.

171. To turn message notification on, press O.
To exit, press the pound key.

172. Enter the hour you wish notification to begin. You must enter a two-digit number followed by A for AM or P for PM.
For example: eight AM would be entered as zero eight A.
To skip to the next setting, press the star key.
To exit, press the pound key.

173. Enter the hour you wish notification to end. You must enter a two-digit number followed by A for AM or P for PM.
For example: five PM would be entered as zero five P.
To skip to the next setting, press the star key.
To exit, press the pound key.

174. To be notified of all messages, press A.
To be notified only when a specific person leaves you a message, press S.
To skip to the next setting, press the star key.
To exit, press the pound key.

175. To be notified at an extension or telephone number, press N.
To be notified at a radio pager, press R.
To be notified at a digital pager, press D.
To skip to the next setting, press the star key.
To exit, press the pound key.

176. Enter the extension or telephone number, then press the pound key.
To skip to the next setting, press the star key.
To exit, press only the pound key.

177. Enter the radio pager number, then press the pound key.
To skip to the next setting, press the star key.
To exit, press only the pound key.

178. Enter the digital pager number, then press the pound key.
To skip to the next setting, press the star key.
To exit, press only the pound key.

179. To require that your security be entered after accepting a notification call, press S. Otherwise, press N.
To exit, press the pound key.

180. That notification number is restricted.

181. That feature is disabled. To have it enabled, see your system administrator.

182. Answering schedule override is off.
To turn answering schedule override on, press O.
To exit, press the pound key.

183. Answering schedule override is on.

184. The override mailbox is _____ .

185. To turn answering schedule override off, press O.
To change the override mailbox, press C.
To exit, press the pound key.

186. Please enter the override mailbox number.

187. Not programmable

188. These are the options you have while listening to a message:

To record a reply, press R E.
To have the message forwarded, press M F.
To make a call to the sender of the message, press M C.
To exit the listen mode, press the pound key.
To hear the time, date, and sender of the message, press T I.
To save the message, press S A.
To erase the message, press E.
To listen to messages in reverse order, press R L.
To listen to the next message, press L.
To backup five seconds and listen, press B.
To backup to the beginning and listen, press B B.
To go ahead five seconds and listen, press G.
To pause while listening, press the star key.
To continue listening after a pause, press the star key.
To turn the volume up, press V U.
To turn the volume down, press V D.
To restore the volume to normal, press V N.
To exit your mailbox, press X.

189. These are the options you have while recording a message:

To backup five seconds and listen to the recording, press B.
To backup to the beginning and listen to the recording, press B B.
To pause while recording, press the star key.
To continue recording after a pause, press the star key.
To erase the message you recorded, press E.
To hear the time and date of the recording, press T I.
To end recording, press the pound key.
To exit your mailbox, press X.

190. To listen to the announcement message, press L.
To record a new announcement message, press R.
To erase the announcement message, press E.
To go to another announcement mailbox, press the pound key.
To exit this feature, press the pound key twice.

191. There is no announcement message for this mailbox.
To record an announcement message, press R.
To go to another announcement mailbox, press the pound key.
To exit this feature, press the pound key twice.

192. Please enter the mailbox number for the welcome message.

193. The announcement message has been erased.

194. Not programmable

195. There is no announcement message.

196. Not programmable

197. You have no messages.

198. You have one message.

199. No messages will be erased.

200. One message will be erased when you exit your mailbox.

201. Please enter the security code.

202. Auto help is on.
To turn auto help off, press O.
To exit this feature, press the pound key.

203. Auto help is off.
To turn auto help on, press O.
To exit this feature, press the pound key.

204. At the tone, you can leave your message for _____ .

205. At the tone, you can leave a message.

206. Hello. I have a message for _____ .

207. To accept this call, press 1. Otherwise, hang up, and I will call again later.

208. Flash

209. Wait for dial tone

210. Dialing pause

211. Monitored dialing pause

212. Not programmable

213. Please enter the mailbox number for the instruction menu.

214. Please enter the mailbox number for the announcement message.

215. Not programmable

216. Recording has been paused.
To continue recording, press the star key.
To end recording, press the pound key.
For a complete list of recording options, press zero.

217. Not programmable

218. You have reached the recording limit.
To listen to the message you recorded, press L.
To erase the message and record a new one, press E.
To send the message, press the pound key or hang up.

219. Not programmable

220. To leave a message, press 1.
To wait for the extension to become available, press 2.
For other options, press 3.

221. Not programmable

222. You have reached the recording limit.
To backup to the beginning and listen to the recording, press B B.
To erase the recording and start over, press E.
To end recording, press the pound key.
For a complete list of recording options, press zero.

223. Listening has been paused.
To continue listening, press the star key.
To exit the listen mode, press the pound key.
For a complete list of listening options, press zero.

224. Not programmable

225. Listening has been paused.
To continue listening, press the star key.
To backup to the beginning and listen, press B B.
To listen to the next message, press L.
To exit the listen mode, press the pound key.
For a complete list of listening options, press zero.

226. You have listened to the entire recording.
To backup to the beginning and listen, press B B.
To exit the listen mode, press the pound key.
For a complete list of listening options, press zero.

227. You have listened to the entire recording.
To exit the listen mode, press the pound key.

228. The message will be erased when you exit your mailbox.
To save the message, press S A .
To listen to the next message, press L.
To exit the listen mode, press the pound key.
For a complete list of listening options, press zero.

229. The message has been saved.
To erase the message, press E.
To listen to the next message, press L.
To exit the listen mode, press the pound key.
For a complete list of listening options, press zero.

230. To listen to the next message, press L.
To exit the listen mode, press the pound key.
For a complete list of listening options, press zero.

231. Not programmable

232. Not programmable

233. Not programmable

234. Not programmable

235. Not programmable

236. Calling _____

237. Not programmable

238. Not programmable

239. Not programmable

240. Oh (leading digit)

241. zero (leading digit)

242. 1 (leading digit)

243. 2 (leading digit)

244. 3 (leading digit)

245. 4 (leading digit)

246. 5 (leading digit)

247. 6 (leading digit)

248. 7 (leading digit)

249. 8 (leading digit)

250. 9 (leading digit)

251. 0h (middle digit)

252. zero (middle digit)

253. 1 (middle digit)

254. 2 (middle digit)

255. 3 (middle digit)

256. 4 (middle digit)

257. 5 (middle digit)

258. 6 (middle digit)

259. 7 (middle digit)

260. 8 (middle digit)

261. 9 (middle digit)

262. Oh (trailing digit)

263. zero (trailing digit)

264. 1 (trailing digit)

265. 2 (trailing digit)

266. 3 (trailing digit)

267. 4 (trailing digit)

268. 5 (trailing digit)

269. 6 (trailing digit)

270. 7 (trailing digit)

271. 8 (trailing digit)

272. 9 (trailing digit)

273. The reply has been sent.

274. The message has been forwarded.

275. That mailbox is busy.

276. Not programmable

277. Not programmable

278. Going to the first message.

279. Going to the last message.

280. Not programmable

281. Not programmable

282. Not programmable

283. The paging message is on.

284. The paging message is off.

285. The message has not been recorded because it is too short.

286. You have not entered enough letters.

287. Double beep (This plays for the Directory Dialing feature when a person dials a name that corresponds to two or more people. NVM-202 plays, ***For person A, dial XXX.***, double beep, ***For person B, dial YYY.***, etc.)

288. press _____.

289. For _____,

290. Dial _____.

291. Please enter _____

292. or more letters of the person's name, starting with their first name, then press the pound key. To enter a Q or Z, press 1. To exit this directory, press only the pound key.

293. Please enter _____

294. or more letters of the person's name, starting with their last name, then press the pound key. To enter a Q or Z, press 1. To exit this directory, press only the pound key.

295. The paging message has been erased.

296. To listen to the paging message, press L.
To turn your paging message on or off, press O.
To record a new paging message, press R.
To exit this feature, press the pound key.

297. There is no paging message for your mailbox.
To record a paging message, press R.
To exit this feature, press the pound key.

298. To leave a message, press 1.
To have the person paged, press 2.
For other options, press 3.

299. That name is not listed in the directory.

300. Or to exit the directory, press the pound key.

301. Not programmable

302. Not programmable

303. Not programmable

304. Not programmable

305. Not programmable

306. To select a programmable prompt, enter the number of the prompt, then press the pound key.
To go to the first programmable prompt, press the star key.
To exit, press only the pound key.

307. To hear only the current prompt number, press N.
To listen to the default prompt, press L
To record a substitute prompt, press R.
To verify the substitute prompt, press V.
To erase the substitute prompt, press E.
To select another programmable prompt, press the pound key.
To go to the next programmable prompt, press the star key.
To exit this feature, press the pound key twice.

308. There are currently no programmable prompts.

309. That prompt is not programmable.

310. Prompt number _____

311. The substitute has been erased and the default prompt has been activated.

312. There is no substitute recorded for prompt number _____.

313. The next programmable prompt has been selected.

314. Not programmable

315. Not programmable

316. 30 seconds of silence -Not programmable

317. There is no welcome message recorded for that mailbox.

318. There is no instruction menu recorded for that mailbox.

319. The message has been copied.

320. The message is being copied. Please wait.

321. Please enter the mailbox number of the welcome message you wish to copy.

322. Please enter the mailbox number of the instruction menu you wish to copy.

323. Not programmable

324. Not programmable

325. Not programmable

326. Welcome to the Mailbox Options Menu.

To change your security code, press S.
To change message notification, press N.
To change the auto help option, press A.
To change the call waiting option, press C W.
To exit this menu, press the pound key.

327. Call waiting is on.
To turn call waiting off, press O.
To exit this feature, press the pound key.

328. Call waiting is off.
To turn call waiting on, press O.
To exit this feature, press the pound key.

329. You have received new messages.

330. Enter the time you wish the message to be sent. You must enter a two-digit number for the hour, then a two-digit number for the minutes, then A for AM or P for PM. For example: eight AM would be entered as zero-eight, zero-zero, A.
To re-enter the time if you make a mistake, press the star key.
To exit this feature, press the pound key.

331. Enter the date you wish the message to be sent. You must enter a two-digit number for the month, then a two-digit number for the day. For example: January 25th would be entered as zero-one, two-five.
To re-enter the date if you make a mistake, press the star key.
To exit this feature, press the pound key.

332. The message will be delivered on _____.

333. To listen to the directory dialing message, press L.
To record a new directory dialing message, press R.
To copy the directory dialing message from another mailbox, press C.
To erase the directory dialing message, press E.
To go to another directory dialing message mailbox, press the pound key.
To exit this feature, press the pound key twice.

334. There is no directory dialing message for this mailbox.
To record a directory dialing message, press R.
To copy the directory dialing message from another mailbox, press C.
To go to another directory dialing message mailbox, press the pound key.
To exit this feature, press the pound key twice.

335. There is no directory dialing message recorded for that mailbox.

336. The directory dialing message has been erased.

337. Please enter the mailbox number for the directory dialing message.

338. Please enter the mailbox number of the directory dialing message you wish to copy.

339. Not programmable

340. Enter the new time of day for the Voice Mail system's clock. You must enter a two-digit number for the hour, then a two digit number for the minute, followed by an A for AM or a P for PM. For example: Eight-Oh-Five A-M would be entered as Zero-Eight, Zero-Five, A.
To re-enter the time if you make a mistake, press the star key.
To exit this feature, press the pound key.

341. Enter the new date for the Voice Mail system's clock. You must enter a two-digit number for the month, day, and year. For example: April 25th 1992 would be entered as Zero-Four, Two-Five, Nine-Two.
To re-enter the date if you make a mistake, press the star key.
To exit this feature, press the pound key.

342. The new system date and time will be _____

343. The system clock has been adjusted.

344. The system clock currently reads _____

345. Your security code is required to confirm system shutdown.

346. All Voice Mail ports are idle.

347. Activity has been detected in the Voice Mail system.
To allow the activity to cease before shutting down, press A.
To shut down immediately, press I.
To cancel the shut down, press the pound key.

348. Starting shut down.
Please stay on the line until notified that shutdown is complete.
To cancel the shut down, press the pound key now.

349. Shut down of the Voice Mail system has been completed.
It is now safe to power-down or reset the Voice Mail computer.

350. Shut down of the Voice Mail system has been aborted.

351. Waiting for Voice Mail activity to cease.

352. Disregarding ongoing Voice Mail activity.

353. The system clock could not be adjusted to the specified settings.
Please try again.

354. Shutdown cannot be initiated from this mailbox.
Only system administrator mailboxes which have been programmed with a security code are permitted to shut down the Voice Mail system.

355. The revision level of the Voice Mail system software is _____

356. It is no longer possible to abort the operation.

357. Your security code will NOT be requested.

358. Your security code will be requested.

359. Wait for sound

360. Enter the extension or telephone number, then press the pound key.
To enter special dialing codes, press the star key followed by the desired code letter. For example, pressing star-P will enter a non-monitored pause into the dial string. Similarly, you may press star-star or star-pound to enter the star or pound keys into the string.
To skip to the next setting, press only the star key.
To exit this feature, press only the pound key.

361. Enter the radio pager number, then press the pound key.
To enter special dialing codes, press the star key followed by the desired code letter. For example, pressing star-P will enter a non-monitored pause into the dial string. Similarly, you may press star-star or star-pound to enter the star or pound keys into the string.
To skip to the next setting, press only the star key.
To exit this feature, press only the pound key.

362. Enter the digital pager number, then press the pound key.
To enter special dialing codes, press the star key followed by the desired code letter. For example, pressing star-P will enter a non-monitored pause into the dial string. Similarly, you may press star-star or star-pound to enter the star or pound keys into the string.
To skip to the next setting, press only the star key.
To exit this feature, press only the pound key.

363-399: Not programmable

400. There is no trunk access dial string for long-distance notification calls.
Enter a string of up to 30 digits, then press the pound key.
To enter special dialing codes, press the star key followed by the desired code letter. For example, pressing star-P will enter a non-monitored pause into the dial string. Similarly, you may press star-star or star-pound to enter the star or pound keys into the string.
To exit this feature, press only the pound key.

401. The trunk access dial string for local notification calls is _____

402. Enter a string of up to 30 digits, then press the pound key.
To clear the local trunk access dial string, press star-zero.
To enter special dialing codes, press the star key followed by the desired code letter. For example, pressing star-P will enter a non-monitored pause into the dial string. Similarly, you may press star-star or star-pound to enter the star or pound keys into the string.
To exit this feature, press only the pound key.

403. There is no trunk access dial string for local notification calls.
Enter a string of up to 30 digits, then press the pound key.
To enter special dialing codes, press the star key followed by the desired code letter. For example, pressing star-P will enter a non-monitored pause into the dial string. Similarly, you may press star-star or star-pound to enter the star or pound keys into the string.
To exit this feature, press only the pound key.

404. The delay time, in minutes, before the next notification callout, following a ring-no-answer attempt, is _____

405. Enter a new delay time, from 1 to 999 minutes, then press the pound key.
Or, to exit this feature, press only the pound key.

406. The delay time, in minutes, between non-pager message notification callout attempts is _____

407. Enter a new delay time, from 1 to 999 minutes, then press the pound key.
Or, to exit this feature, press only the pound key.

408. The maximum number of rings per notification callout attempt is _____

409. Enter a new number, from 1 thru 99, for the notification ring limit, then press the pound key.
Or, to exit this feature, press only the pound key.

410. During a pager message notification call, the delay time, in seconds, before playing the pager announcement is _____

411. Enter a new delay time, from 0 thru 99 seconds, then press the pound key.
Or, to exit this feature, press only the pound key.

412. The delay time, in minutes, between pager message notification callout attempts is _____

413. Enter a new delay time, from 1 to 999 minutes, then press the pound key.
Or, to exit this feature, press only the pound key.

414. Message notifications to pagers are currently programmed to continue until the notification callout limit is reached.
To have pager notification callout attempts continue until acknowledged, press A.
To exit this feature, press the pound key.

415. Message notifications to pagers are currently programmed to continue until acknowledged.
To have pager notification callout attempts continue only until the notification callout limit is reached, press C.
To exit this feature, press the pound key.

416. The message notification callback number for digital pagers is _____

417. Enter a string of up to 12 digits, then press the pound key.
To clear the digital pager callback string, press star-ZERO.
Or, to exit this feature, press only the pound key.

418. No message notification callback number for digital pagers has been programmed.
Enter a string of up to 12 digits, then press the pound key.
Or, to exit this feature, press only the pound key.

419. During a message notification call to a digital pager, the delay time, in seconds, before dialing the callback number is _____

420. Enter a new delay time, from 0 to 99 seconds, then press the pound key.
Or, to exit this feature, press only the pound key.

421. The length limit, in seconds, for messages left in non-subscriber mailboxes, is currently _____

422. Enter a length limit, from 1 to 999 seconds, then press the pound key.
Or, to exit this feature, press only the pound key.

423. The length limit, in seconds, for messages left in subscriber mailboxes, is currently _____

424. Enter a length limit, from 1 to 999 seconds, then press the pound key.
Or, to exit this feature, press only the pound key.

425. Daily maintenance is currently programmed to occur at ____.

426. Enter the time you wish daily maintenance to take place. You must enter a two-digit number for the hour, then a two-digit number for the minute, followed by an A for AM or a P for PM. For example: Three fifteen AM would be entered as zero-three, one-five, A.
To disable Daily Maintenance, press the star key.
To exit this feature, press the pound key.

427. Daily maintenance is currently disabled.
To enable daily maintenance, you must select the time you wish daily maintenance to take place. You must enter a two-digit number for the hour, then a two-digit number for the minute, followed by an A for AM or a P for PM. For example: Three fifteen AM would be entered as zero-three, one-five, A.
To exit this feature, press the pound key.

428. Measured in tenths-of-a-second, the longest allowable period of recorded silence is _____

429. Enter a new value, from 2 to 30 tenths of a second, for the longest allowable period of recorded silence. Then press the pound key.
To permit unlimited recorded silence, press the star key.
To exit this feature, press only the pound key.

430. There is currently no limit on periods of recorded silence.
To limit recorded silence, enter a value, from 2 to 30 tenths of a second, for the longest allowable period of recorded silence. Then press the pound key.
To exit this feature, press only the pound key.

431. Please enter the number, one, two or three, of the dial action table you wish to work on.
Or, to return to the Database Management Menu, press the pound key.

432. Please select from the following list of dial action programming options.
To hear the parameters currently specified for the selected Table, press H P.
To specify a key which will transfer the caller to a predefined mailbox, press M G.
To specify a key which will transfer the caller to a mailbox which they dial, press C G.
To specify a key which will transfer the caller to a predefined extension, press E T.
To specify a key which will transfer the caller to an extension which they dial, press C T.
To specify a key which will allow the caller to record a message in a predefined mailbox, press M R.
To un-define the dial-action assignment of a key, press U K.
To restore the default dial-actions for the selected table, press R D.
To exit this feature, press the pound key twice.

433. Enter a string of up to 30 digits to be programmable with the selected dial action function, then press the pound key.
To enter special dialing codes, press the star key followed by the desired code letter. For example, pressing star-P will enter a non-monitored pause into the dial string. Similarly, you may press star-star or star-pound to enter the star or pound keys into the string.
To exit this feature, press only the pound key.

434. Please press the key with which you would like to associate this action. Valid selections include keys zero thru 8, as well as the star key, which selects the timeout action.
To cancel this dial-action assignment, press only the pound key.

435. If you are sure that you want to restore the default dial action table configuration, press Y.
To leave the table unchanged, press N.

436. The dial action programming for key 0 is _____

437. The dial action programming for key 1 is _____

438. The dial action programming for key 2 is _____

439. The dial action programming for key 3 is _____

440. The dial action programming for key 4 is _____

441. The dial action programming for key 5 is _____.

442. The dial action programming for key 6 is _____

443. The dial action programming for key 7 is _____

444. The dial action programming for key 8 is _____

445. The dial action programming for key 9 is _____

446. The dial action programming for the star key is _____

447. The dial action programming for the pound key is _____

448. The timeout dial action programming is _____

449. Undefined

450. Go to the caller-dialed mailbox

451. Go to mailbox ___.

452. Transfer to the caller-dialed extension

453. Transfer to extension _____

454. Unscreened transfer to the caller-dialed extension

455. Unscreened transfer to extension _____

456. Hang up

457. Log on

458. Record a message in the caller-dialed mailbox.

459. Record a message in mailbox _____

460. Directory dialing using first names

461. Directory dialing using last names

462. Enter the department schedule table number, from 1 thru 4, that you wish to program.
Or, to return to the Database Management Menu, press the pound key.

463. The workday for this department begins at ___.

464. To modify the time that the workday begins for this department, enter the new time now. You must enter a two-digit number for the hour, then a two-digit number for the minute, followed by an A for AM or a P for PM. For example: Eight a.m. would be entered as zero-eight, zero-zero, A.
To erase the workday starting time, press the star key.
To exit this feature, press the pound key.

465. There is no workday starting time programmed for this department.
To set the time that the workday begins for this department, enter that time now. You must enter a two-digit number for the hour, then a two-digit number for the minute, followed by an A for AM or a P for PM. For example: Eight a.m. would be entered as zero-eight, zero-zero, A.
To exit this feature, press the pound key.

466. The second half of the workday for this department begins at ___.

467. To modify the time that the second half of the workday begins for this department, enter the new time now. You must enter a two-digit number for the hour, then a two-digit number for the minute, followed by an A for AM or a P for PM. For example: Noon would be entered as one-two, zero-zero, P.
To erase the mid-workday starting time, press the star key.
To exit this feature, press the pound key.

468. There is no mid-workday starting time programmed for this department.
To set the time that the second half of the workday begins for this department, enter that time now. You must enter a two-digit number for the hour, then a two-digit number for the minute, followed by an A for AM or a P for PM. For example: Noon would be entered as one-two, zero-zero, P.
To exit this feature, press the pound key.

469. The workday for this department ends at _____

470. To modify the time that the workday ends for this department, enter the new time now. You must enter a two-digit number for the hour, then a two-digit number for the minute, followed by an A for AM or a P for PM. For example: Five p.m. would be entered as zero-five, zero-zero, P.
To erase the workday quitting time, press the star key.
To exit this feature, press the pound key.

471. There is no workday quitting time programmed for this department.
To set the time that the workday ends for this department, enter that time now. You must enter a two-digit number for the hour, then a two-digit number for the minute, followed by an A for AM or a P for PM. For example: Five p.m. would be entered as zero-five, zero-zero, P.
To exit this feature, press the pound key.

472. The workweek for this department is from _____

473. To modify the day that the workweek begins for this department, specify the new day now by entering the first two letters of the day. For example: Monday would be entered as M O, which is six, six.
To erase the workweek definition for this department, press the star key.
To exit this feature, press the pound key.

474. The workweek is not defined for this department.
To specify the day on which the workweek for this department starts, enter it now by pressing the first two letters of the day. For example: Monday would be entered as M O, which is six, six.
Or, to exit this feature, press the pound key.

475. To specify the day on which the workweek for this department ends, enter it now by pressing the first two letters of the day. For example: Friday would be entered as F R, which is three, seven.
Or, to exit this feature, press the pound key.

476. If you are sure that you want to restore the default department schedule table configuration, press Y.
To leave the table unchanged, press N.

477. Going to mailbox number _____

478. _____ through _____

479. Sunday

480. Monday

481. Tuesday

482. Wednesday

483. Thursday

484. Friday

485. Saturday

486. The starting time for each workday is _____

487. The mid-day time for each workday is _____

488. The end-of-day time for each workday is _____

489. The weekend begins _____

490. Welcome to the Database Management Menu.
For system options, press S O.
For notification options, press N O.
For mailbox programming, press M P.
For daily department schedule set-up, press D S.
For dial-action programming, press D A.
To set the system clock, press T I.
To set the system date, press D T.
To hear the system version number, press S V.
For system initialization, press S I.
To prepare the system for power-down, press P D.
To exit this menu, press the pound key.

491. Please select from the following list of system options.
To set the daily maintenance time, press D M.
To set the subscriber message length limit, press S L.
To set the non-subscriber message length limit, press N L.
To set the length limit of recorded silence, press R S.
To return to the Database Management Menu, press the pound key.

492. Please select from the following list of notification options.
To set the time to wait before repeating a callout attempt following a completed non-pager notification call, press O K.
To set the time to wait before the next callout attempt following a ring-no-answer non-pager notification call, press N A
To set the time to wait before the next callout attempt following a busy notification call, press B Y.
To set the limit for the number of notification call attempts, press C L.
To set the limit for the number of rings per notification callout, press R L.
To set the local line access dial stream, press L O.
To set the long distance line access dial stream, press L D.
To set pager notification parameters, press P N.
To return to the Database Management Menu, press the pound key.

493. Please select from the following list of pager notification options.
To set the time to wait before repeating a callout attempt following a completed notification call to a pager, press R.
To set the limit of how long to continue pager notifications, press L.
To store the digital pager callback number, press C.
To set the delay between when a notification call is answered and dial-out of the digital pager callback number, press D.
To set the time to wait before playing the notification message to a radio pager, press N.
To return to the Notification Options Menu, press the pound key.

494. Please select from the following list of mailbox options.

To assign trunk mailboxes to specific department schedules, press T S.
To program messaging mailbox parameters, press M M.
For programming distribution list mailboxes, press D L.
To select the method for terminating calls to an announcement mailbox, press A T.
To specify the number of repetitions of the message in an announcement mailbox, press A M.
To specify system administrator mailboxes, press S A.
To delete the security code of a particular mailbox, press D S.
To return to the Database Management Menu, press the pound key

495. Please select from the following list of messaging mailbox options.
To specify the default message playback direction, press P D.
To program message-waiting lamping, press M W.
To program forcing of unscreened transfers, press U X.
To program announced call screening, press C S.
To program blocking of auto-attendant calls, press B A.
To specify the next call-routing mailbox, press N C.
To specify the maximum message storage limit, press M L
To program external message notification, press M N
To override the call type for the message notification number, press O T.
To return to the Mailbox Programming Menu, press the pound key.

496. Please select from the following list of department schedule programming options.
To hear the schedule currently specified for the selected department, press H S.
To specify the starting time of each workday in the selected department, press S T.
To select a mid-workday time to change call-routing for the selected department, press A T
To specify the ending time of each workday in the selected department, press E T
To define the days in the workweek, press D W.
To recall the original scheduling for the selected department, press O S.
To exit this feature, press the pound key twice.

497. Welcome to the Main Menu of features.
To listen to your messages, press L.
To record and send a message, press R S.
To check on a message you sent, press C M.
To record a greeting for your mailbox, press G.
To record a name for your mailbox, press R N.
To record and send a future delivery message, press F D.
To record a paging message, press P G.
For mailbox options, press O P.
To hear the time and date, press T I
For system administrator options, press S A.
For system database management, press D M.
To exit your mailbox, press X.

498. Please enter the mailbox number.
Or, to exit, press the pound key.

499. Please enter the mailbox number or, to increment to the next mailbox, press the star key.
To exit, press the pound key.

500. None

501. Please select from the following list of initialization options.
To hear the current Voice Mail configuration, press H C.
For integration of the Voice Mail system with either a one- or two-cabinet ONYX phone system, press V S.
For integration of the Voice Mail system with a three-cabinet ONYX phone system, press T C.
To configure the Voice Mail to optimize in favor of message storage capacity rather than message sound quality, press F C.
To configure the Voice Mail to optimize in favor of message sound quality rather than message storage capacity, press F S.
To return to the Database Management Menu, press the pound key.

502. The Voice Mail is currently configured for _____

503. _____ integration with a one- or two-cabinet ONYX phone system and will optimize data compression to favor message storage capacity.

504. _____ integration with a one- or two-cabinet ONYX phone system and will optimize data compression to favor message sound quality.

505. _____ integration with a three-cabinet ONYX phone system and will optimize data compression to favor message storage capacity.

506. _____ integration with a three-cabinet ONYX phone system and will optimize data compression to favor message sound quality.

507. WARNING! All previously-recorded messages will be erased when the data compression rate is changed. Your security code is required in order to make this modification.

508. WARNING! All Voice Mail parameters will be reset to their default values if the system is reinstalled. Also, all previously-recorded messages will be erased. Your security code is required in order to initiate re-installation.

509. System installation parameters may not be modified from this mailbox. Only system administrator mailboxes which have been programmed with a security code are permitted to re-initialize the Voice Mail system.

510. All other Voice Mail ports are idle.

511. Activity has been detected in the Voice Mail system.
To allow the activity to cease before re-initialization, press A.
To re-initialize immediately, press I.
To cancel this operation, press the pound key.

512. The Voice Mail database will now be updated and all messages erased. Please stay on the line until notified that the operation has been completed. The process may take up to two minutes to complete.
To cancel this operation, press the pound key now.

513. Re-initialization of the Voice Mail system has been completed.

514. Re-initialization of the Voice Mail system has been aborted.

515. Waiting for Voice Mail activity to cease.

516. Disregarding ongoing Voice Mail activity.

517. WARNING! The phone system you have selected is the same as is currently in use. All Voice Mail parameters will be reset to their default values if the system is reinstalled. Also, all previously-recorded messages will be erased. Your security code is required in order to initiate reinstallation.

518. WARNING! The data compression option you have selected is the same as is currently in use. If this command is processed to completion, all previously-recorded messages will be erased from the Voice Mail system. Your security code is required in order to proceed.

519. The number of times this announcement mailbox will repeat its announcement is _____

520. Welcome to the System Administrator Menu.
For the broadcast message, press B R.
For welcome messages, press W.
For instruction menu messages, press I.
For directory dialing messages, press D D.
For announcement messages, press A N.
For mailbox names, press N.
For answering schedule override, press S O.
To set the system time, press T I.
To set the system date, press D T.
To hear the system version number, press S V.
To prepare the system for power-down, press P D.
To exit this menu, press the pound key.

521. Not programmable

522. Not programmable

523. Not programmable

524. Enter a new number, from 1 thru 10, then press the pound key.
To go to another mailbox, press only the pound key.
To exit this feature, press the pound key twice.

525. This announcement mailbox is currently programmed to hang up after playing its message. To disable the hang-up option, press D.
To go to another announcement mailbox, press the pound key.
To exit this feature, press the pound key twice.

526. The hang-up option for this announcement mailbox is currently disabled.
To enable the hang-up option, press E.
To go to another announcement mailbox, press the pound key.
To exit this feature, press the pound key twice.

527. To add mailboxes to the distribution list, press A.
To delete mailboxes from the list, press D.
To hear which mailboxes are in the list, press L.
To remove all mailboxes from the list, press R.
To go to another distribution mailbox, press the pound key.
To exit this feature, press the pound key twice.

528. Please enter the mailbox number you wish to add to the distribution list.
Or, to exit, press the pound key.

529. The distribution list is full. No more mailboxes may be added to this list.

530. That mailbox is already in the distribution list.

531. Please enter the mailbox number you wish to delete from the distribution list.
Or, to exit, press the pound key.

532. If you are sure that you want to remove all mailboxes from the list, press Y.
To leave the list unchanged, press N.

533. That mailbox is not in the distribution list.

534. This mailbox is currently allowed to perform system administrator functions.
To disable the system administrator option, press D.
To go to another mailbox, press the pound key.
To exit this feature, press the pound key twice.

535. This mailbox is currently restricted from performing system administrator functions.
To enable the system administrator option, press E.
To go to another mailbox, press the pound key.
To exit this feature, press the pound key twice.

536. This Trunk mailbox is currently using department schedule table _____

537. Enter a new department schedule table number, from 1 thru 4, or press the star key for NONE. Then press the pound key.
Or, to go to another mailbox, press only the pound key.
To exit this feature, press the pound key twice.

538. This trunk mailbox is not currently using a department schedule table.
Enter a new department schedule table number, from 1 thru 4, then press the pound key.
Or, to go to another mailbox, press only the pound key.
To exit this feature, press the pound key twice.

539. If you wish to delete the security code for this mailbox, press D.
Otherwise, press the pound key.

540. This mailbox is currently programmed to block auto-attendant calls.
To disable blocking of auto-attendant calls, press D.
To go to another mailbox, press the pound key.
To exit this feature, press the pound key twice.

541. This mailbox is currently programmed to allow calls from the auto-attendant.
To enable blocking of auto-attendant calls, press E.
To go to another mailbox press the pound key.
To exit this feature, press the pound key twice.

542. The call announcing option for this mailbox is enabled.
To disable call announcing, press D.
To go to another mailbox, press the pound key.
To exit this feature, press the pound key twice.

543. The call announcing option for this mailbox is disabled.
To enable call announcing, press E.
To go to another mailbox, press the pound key.
To exit this feature, press the pound key twice.

544. The next call routing mailbox for this mailbox is _____

545. Please enter a new next call routing mailbox number, or press the star key for "None."
Or, to go to another mailbox, press the pound key.
To exit this feature, press the pound key twice.

546. There is no next call routing mailbox assigned to this mailbox.
Please enter a next call routing mailbox number.
Or, to go to another mailbox, press the pound key.
To exit this feature, press the pound key twice.

547. The maximum number of messages allowed for this mailbox is _____

548. Enter a new maximum number of messages, from 1 thru 1000, then
press the pound key.
Or, to go to another mailbox, press only the pound key.
To exit this feature, press the pound key twice.

549. This mailbox is currently permitted to use outside lines for message notification calls.
To limit the mailbox to internal numbers, press I.
To go to another mailbox, press the pound key.
To exit this feature, press the pound key twice.

550. This mailbox is currently limited to using only internal numbers for message notification calls.
To allow outside lines to be programmable, press O.
To go to another mailbox, press the pound key.
To exit this feature, press the pound key twice.

551. The message notification call Type is internal.
To change it to local, press L O.
To change it to long distance, press L D.
To go to another mailbox, press the pound key.
To exit this feature, press the pound key twice.

552. The message notification call type is local.
To change it to internal, press I N.
To change it to long distance, press L D.
To go to another mailbox, press the pound key.
To exit this feature, press the pound key twice.

553. The message notification call type is long distance.
To change it to internal, press I N.
To change it to local, press L O.
To go to another mailbox, press the pound key.
To exit this feature, press the pound key twice.

554. This is the wrong type of mailbox.

555. The message-waiting lamp option is currently enabled for this mailbox.
To disable the lamping option, press D.
To go to another mailbox, press the pound key.
To exit this feature, press the pound key twice.

556. The message-waiting lamp option is currently disabled for this mailbox.
To enable the lamping option, press E.
To go to another mailbox, press the pound key.
To exit this feature, press the pound key twice.

557. The default message playback direction for this mailbox is currently last-in-first-out.
To change it to first-in-first-out, press F.
To go to another mailbox, press the pound key.
To exit this feature, press the pound key twice.

558. The default message playback direction for this mailbox is currently first-in-first-out.
To change it to last-in-first-out, press L.
To go to another mailbox, press the pound key.
To exit this feature, press the pound key twice.

559. The forced unscreened transfer option is currently enabled for this mailbox.
To disable this option, press D.
To go to another mailbox, press the pound key.
To exit this feature, press the pound key twice.

560. The forced unscreened transfer option is currently disabled for this mailbox.
To enable this option, press E.
To go to another mailbox, press the pound key.
To exit this feature, press the pound key twice.

561. The maximum number of callout attempts for message notification is _____

562. Enter a new notification callout limit, from 1 thru 99, then press the pound key.
Or, to exit this feature, press only the pound key.

563. The delay time, in minutes, before the next notification callout, following a busy attempt, is ___.

564. Enter a new delay time, from 1 to 999 minutes, then press the pound key.
Or, to exit this feature, press only the pound key.

565. The trunk access dial string for long-distance notification calls is _____

566. Enter a string of up to 30 digits, then press the pound key.
To clear the long-distance trunk access dial string, press star-zero.
To enter special dialing codes, press the star key followed by the desired code letter. For example, pressing star-P will enter a non-monitored pause into the dial string. Similarly, you may press star-star or star-pound to enter the star or pound keys into the string.
To exit this feature, press only the pound key.

Index

AC power
  connector 13
  requirements 12
acd announcement mailbox 113-114
activity/error log 148
allow msg notification & lamp callouts 59
announcement mailbox 35, 109-111
announcement message 168
announcing calls
  see call announcing
answering calls
  see automated attendant
answering schedule override 36, 170
answering schedule table
  assigning one to a trunk 88
  assigning one to a voice mail port 60
  how automated attendant uses them 35-36
  making entries in 127-128
  reports on 148
  sample schedules 35
auto erase/save of messages 83, 96, 105
automated attendant
  blocking its calls 75
  default for 44, 132
  described 3
  how it answers calls
    described 35-36
    flowchart 50
    programming 36-37
  how it provides routing options
    described 38
    flowchart 50
    programming 45-49
  reports on how it answers/routes calls 148
  returning to 74, 92
automatic call distribution announcement
    mailbox 113-114
automatic page
  see park/paging string
backing up the database remotely 155
baud rate 154
blocking automated attendant calls 75
broadcast message 161
call announcing
  described 82-83
  extension requirements for 60
  on/off flag on report 147
call handling flags report 147
call routing mailbox 35, 38, 66-70
call waiting 80-82, 147
callouts, message notification
  see message notification
calls
  answering *see* automated attendant
  number per port 146
  routing *see* automated attendant
communication (COM) port
  see port, communication (COM)
compatibility with phone system, NVM-202 3
connecting NVM-202 to telephone system 13
connecting NVM-202 to terminal/monitor 12
conversation beep, recording 84, 96, 105
creating a mailbox 64
CTS/RTS flow control 154
CUSTOMIZE DATABASE menu 64
customizing voice prompts
  see voice prompts
daily maintenance time 54, 152-153
data, entering 28
database
  exiting 28
  remotely backing up and restoring 155
  using 28
date, setting system 152, 173
default database 20
default installation set-up 17
defragmentation, disk 54, 152-153
department name, mailbox 68, 73, 88, 91, 101, 108,
    111, 114, 118, 122
DIAGNOSTICS menu 156
diagnostics 156-158
dial action table
  assigning one to a call routing mailbox 68
  assigning one to a directory dialing mailbox 118
  making entries in 129-132
  used by automated attendant 38
dialing commands, number of attempts on 55
dialing commands, time limit for 55
dimensions, NVM-202 5
direct lines 36, 74
directory dialing by name
  using a call routing mailbox
    described 42
    programming 47
  using a directory dialing mailbox
    see directory dialing mailbox
directory dialing by number
  described 42
  programming 47
directory dialing mailbox 35, 115-120
directory dialing message 166-167
directory dialing minimum entry 57
directory list 69, 77-78, 95, 104, 111, 119
directory list to use 70, 120
disk defragmentation 54, 152-153
disk space used by messages 146

distribution list
adding mailboxes to 139
assigning one to a distribution mailbox 108
deleting mailboxes from 139
described 139
report on 148
distribution mailbox 107-108
DOC registration 5
electrical requirements, NVM-202 12
eliminate recording silence 57
EMI emissions, NVM-202 5
entering data 28
environmental requirements, NVM-202 12
equipment requirements, NVM-202 11-12
erase messages automatically 83, 96, 105
erasing a mistake 28
error/activity log 148
exiting database 28
exiting menus 28
extension
assigning one to a mailbox 73, 88, 91, 101
assigning one to a port 60
extension name directory
see directory dialing by name
extension number directory
see directory dialing by number
extension status
see status, extension
FCC registration 5
flash timer 57
flow control
CTS/RTS 154
XON/XOFF 154
forced unscreened transfers 78, 95, 105
future delivery mailbox 121-123
greeting, mailbox 39, 41, 43, 56, 147
guest mailbox 99-106
hang up after announcement 111
hang up, routing to
described 43
programming 48
help 28, 29
hold retrieval string 56
INSTALL SYSTEM menu 20
installing NVM-202
connecting NVM-202 to telephone system 13
connecting NVM-202 to terminal/monitor 12
default installation settings 17
described 17-20
installing mailboxes 19
installing the voice compression rate 19,22
re-installing ports only 22
setting time/date/port option 21
testing after installing 21
installing NVM-202 (cont'd)
using the software installation procedure 20-21
viewing the current installation settings 22
instruction menu 38, 164-165, 166
length of messages 56
limit on dialing command attempts 55
limit on mailbox logon attempts 54
logon attempts for mailboxes 54
logon time for mailboxes 53
mailbox default security code
see mailboxes
mailboxes
assigning department name to 68, 73, 88, 91, 101, 108, 111, 114, 118, 122
assigning extension to 73, 88, 91, 101
auto erase/save of messages in 83, 96, 105
creating 64
date/time of oldest message in 146
default security code for subscribers 19, 55
deleting 65
disk space used by their messages 146
logon attempts allowed 54
logon time allowed 53
message retention for 84, 96, 105
message waiting lamp for 73, 92, 101
name 68, 72, 73, 88, 91, 100, 108, 110, 114, 118, 122, 169
name recorded flag on report 147
number of messages allowed per 77, 94, 104, 123
number of stored messages per 146
numbering plan 17, 19, 63
programming message notification for 75-77, 93-94, 102-103
recording conversation beep for 84, 96, 105
reports on 146-147
routing to
described 43
programming 48-49
security code for 19, 55, 72, 91, 100, 110, 122
system capacity for 5
types 64-123
MAIN menu 17
MAINTENANCE menu 151
maintenance 151-155
menus
CUSTOMIZE DATABASE 64
DIAGNOSTICS 156
exiting 28
getting help on commands 29
hiding 29
INSTALL SYSTEM 20
MAIN 17
MAINTENANCE 151
using 28

menus (cont'd)
VIEW/PRINT REPORTS 145
message center mailbox 35, 89-98
message notification
allowing callouts through ports 59
enabling/disabling callout report 138
extension requirements 60
number of callouts per port 146
programming a mailbox for 75-77, 93-94, 102-104
programming the way callouts are sent 135-138
report on callouts 147-148
message waiting lamp
allowing updates through ports 59
enabling/disabling 73, 92, 101
number of updates per port 145
messages
acd announcement 168
announcement 168
broadcast 161
date/time of oldest in a mailbox 146
directory dialing 166-167
disk space used by 146
erase 96, 105
erased automatically by NVM-202 83
instruction menu 164-165
leaving one through automated attendant 39, 40, 43
length of 56
number allowed in a mailbox 77, 94, 104, 123
number stored in a mailbox 146
playback order for 77, 95, 104
receiving new ones while in mailbox 73, 92, 101
retention 84, 96, 105
saved automatically by NVM-202 83, 96, 105
system capacity for (in hours) 5
welcome 162-163
min entry for directory dialing 57
modem
connecting one to NVM-202 23
required type 11
setting up COM port for 155
monitor, monochrome 11, 12
name, mailbox 68, 72, 73, 88, 91, 100, 108, 110, 114, 118, 122, 169
name-dialing 42, 115
next call routing mailbox 74, 92
numbering plan 63
NVM-202
compatibility with phone systems 3
electrical requirements 12
equipment requirements 11
site requirements 12
specifications 5
NVM-202 (cont'd)
telephone system interface equipment 11
overriding the answering schedule 170
pager callouts
see message notification
paging a subscriber
see park/paging string
parity 154
park/paging flag on report 147
park/paging string 78-80
password 27, 53
play greeting for qck msg/mailbox trf 56
playback order, message 77, 95, 104
port, communication (COM)
setting up 153-155
ports, communication (COM)
location on cabinet 13
ports, voice mail
activity 156-158
allowing message notification callouts through 59
allowing message waiting updates through 59
assigning answering schedule table to 60
assigning extension to 60
changing number of 22
diagnostics for 156-158
indication when all are busy 148
installing 18, 22
location of connectors 13
programmable options for 59-60
report on usage 145-146
system capacity for 5
taking them in/out of service 59, 153
power switch 13
powering down NVM-202 23, 175
printer
location of its connector on cabinet 13
requirements 11
printing reports 145
prompts, voice
see voice prompts
protocol digits, wait time for 58
quick message
described 43
greeting for 56
programming 48
re-installing the ports only 22
recording
a message after incomplete transfer 39
announcement message 168
broadcast message 161
delay before eliminating silence in 57
directory dialing message 166-167
eliminating silence in 57
instruction menu 164-165

recording (cont'd)
mailbox names 169
message after incomplete transfer 40
silence limit for 55
welcome message 162-163
recording conversation beep 84, 96, 105
registrations, NVM-202 5
reliability, NVM-202 5
remote communications
connecting modem for 23
setting up COM port for 155
remotely backing up and restoring database 155
repeat announcement (number of times) 111
reports
printing 145
types 145-148
viewing 145
resetting NVM-202 23, 155, 175
restoring the database remotely 155
retention, message 84, 96, 105
revision level, software
see system version number
ringdown string 57
rings before redirect transfer 69, 119
routing options
described 38-44
programming 45-49
RS-232C cable requirements 11
safety approvals, NVM-202 5
save messages automatically 83, 96, 105
screened transfer
see transfer to extension, screened
security code
default for subscriber mailboxes 19, 55
for mailboxes 72, 91, 100, 110, 122
shutting down NVM-202 23, 155, 175
silence
amount allowed in a recording 55
delay before eliminating it in a recording 57
eliminating it in a recording 57
site ID 53
site requirements, NVM-202 12
software version number
see system version number
specifications, NVM-202 5
starting up NVM-202 17
status, extension 38-39, 40
stop bits 154
subscriber mailbox 19, 35, 71-86
subscriber message length 56
system administrator
mailbox 75
options 161-175
system options 53-58
system password 53
system version number 174
system voice prompts, voice
see voice prompts
telephone system
connecting NVM-202 to 13
hardware interface equipment for NVM-202 11
programming 12
terminal
connecting it to NVM-202 12
setting its communication parameters 12
types required 11
testing NVM-202 21
time limit for dialing commands 55
time limit for mailbox logon 53
time, setting system 151, 172
timeout action 131
timer, flash 57
transfer to extension, forced unscreened 78, 95, 105
transfer to extension, screened
described 38-40
programming 45-46
transfer to extension, unscreened
described 40-41
programming 46
transfer to mailbox from Automated Attendant
described 41
programming 46
transfer to mailbox from extension 66, 71, 89, 99, 109, 116
trunk mailbox 19, 87-88
undefined routing
described 43
programming 48
unscreened transfer
see transfer to extension, unscreened
version number
see system version number
VIEW/PRINT REPORTS menu 145
viewing reports 145
viewing the current installation settings 22
voice compression rate 17, 19, 22
voice mail
described 3
routing to
described 43
programming 48
voice prompts
customizing 171
described 3
listed 179-222
welcome message 38, 162-163
word length 154
XON/XOFF flow control 154

NITSUKO AMERICA
TELECOM DIVISION

Nitsuko America, Telecom Division
4 Forest Parkway
Shelton, CT 06484

TEL: 203-926-5400
FAX: 203-929-0535

Other Important Telephone Numbers

Sales:	203-926-5450
Customer Service:	203-926-5444
Customer Service FAX:	203-926-5454
Technical Service:	203-925-8801
Discontinued Product Service:	900-990-2541
Technical Training:	203-926-5430
Emergency Technical Service (After Hours)	203-929-7920

(Excludes discontinued products)