Panasonic

900MHz Cordless Data Link

Model No. KX-TCL100-B

Operating Instructions

DATA LINK

TOUCH TONE ONLY

PLEASE READ BEFORE USE AND SAVE.

Charge the battery for about 15 hours before initial use.

Preparation

Operation

Useful Information

Before Initial Use

Please read IMPORTANT SAFETY INSTRUCTIONS on pages 23–25 before use. Read and understand all instructions.

Thank you for purchasing the Panasonic Cordless Data Link.

Attach your purchase receipt here.

For your future reference

Serial No. _____
(found on the bottom of the unit)

Date of purchase _____

Name and address of dealer _____

PLEASE NOTE:

- Communications are transmitted between the base unit and the remote unit up to 28.8 kbps data speed. Based on line and radio conditions, transmission speed will vary.
- This product operates with TOUCH TONE service only.
- This product does not include a modem.

Accessories (To order accessories, call 1-800-332-5368.)

☐ AC Adaptor (p. 11)
Part No. KX-TCA7

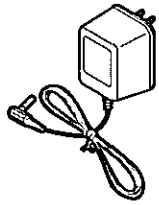

one

☐ Battery (p. 10)
Part No. KX-TCA8

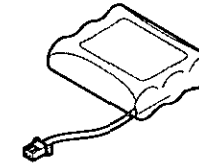

one

☐ Telephone Line Cord (p. 11)

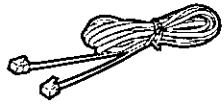

one

☐ Short Telephone Line Cord (p. 15)

one

☐ Remote Unit Cover (p. 10)

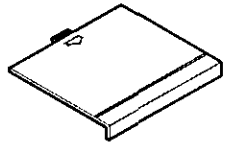

one

☐ Computer Mounting Bracket with a Double-sided Tape (p. 14, 15)

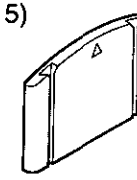

one

☐ Spare Double-sided Tape (p. 15)

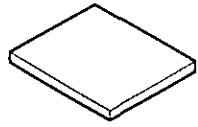

one

For Best Performance

Battery Charge

A rechargeable Ni-Cd battery powers the remote unit. Install the battery (p. 10) and charge it for about **15 hours** before initial use (p. 12).

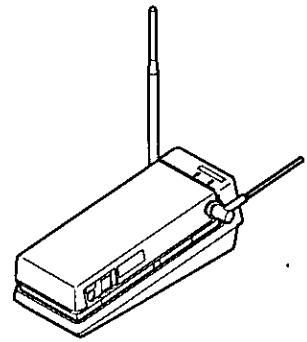

Operating Distance/Noise

Communications are transmitted between the base unit and the remote unit using wireless radio waves. **For maximum distance and noise free operation**, the recommended base unit location is:

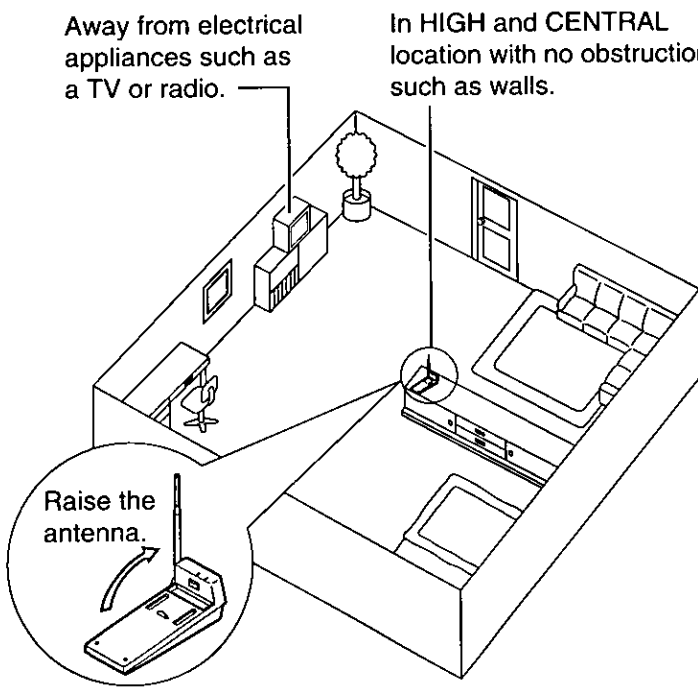

- If the link is cut off frequently, set the modem speed to a slower setting.
- Some wireless transmission equipment operate at frequencies that may interfere with the base unit and the remote unit.
  To minimize or prevent such interference, the units should not be placed near other wireless transmission equipment.

Contents

Preparation

Location of Controls 6
Remote Unit 6
Base Unit 8

Settings 10
Installing the Battery in the Remote Unit 10
Connection 11
Battery Charge 12
Mounting the Remote Unit 14

Operation

Operation 16

Useful Information

Optional AC Adaptor 18

Battery Replacement 19

Before Requesting Help 20

Protecting the 900MHz Cordless Data Link 22

Important Safety Instructions 23

FCC and Other Information 26

Remote Unit

Do not force the antenna beyond the stopper.
The antenna rotates approximately 270 degrees.

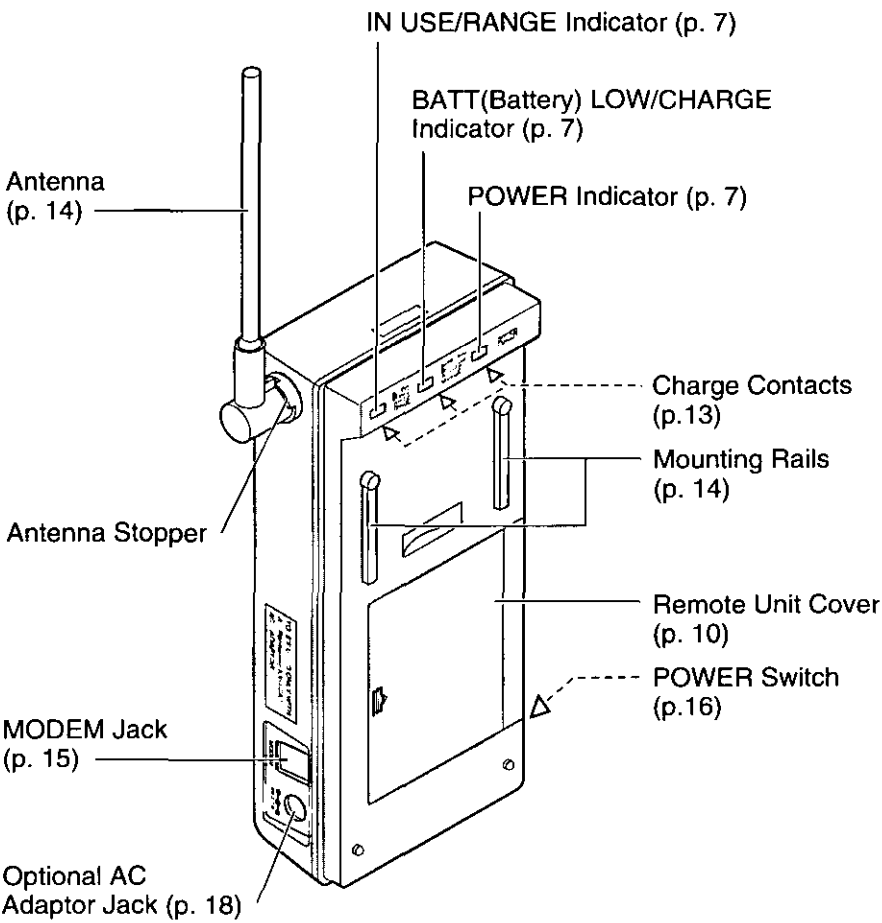

Remote unit indicator

IN USE/RANGE indicator

Green	The communication quality between the remote unit and the base unit is good.
Flashing Green	The remote unit is in channel search mode or receiving an incoming call.
Amber	The signal is weak. Communication between the remote unit and the base unit may be impaired.
Red	Move the remote unit closer to the base unit quickly and adjust the antenna, or communication between the remote unit and the base unit will be terminated within 30 seconds.
Off	Not active. The POWER switch is OFF or in standby mode.

BATT(Battery) LOW condition

	BATT LOW/CHARGE Indicator	**Beep**
Operation	Flashing Red	every minute
Standby	Flashing Red	every 3 minutes
Power off	Off	—

If the remote unit is connected to the optional AC adaptor (p. 18), the BATT LOW/CHARGE indicator remains solid red.

POWER indicator

Power off	Off
Power on	Green

Base Unit

The antenna rotates approximately 200 degrees.

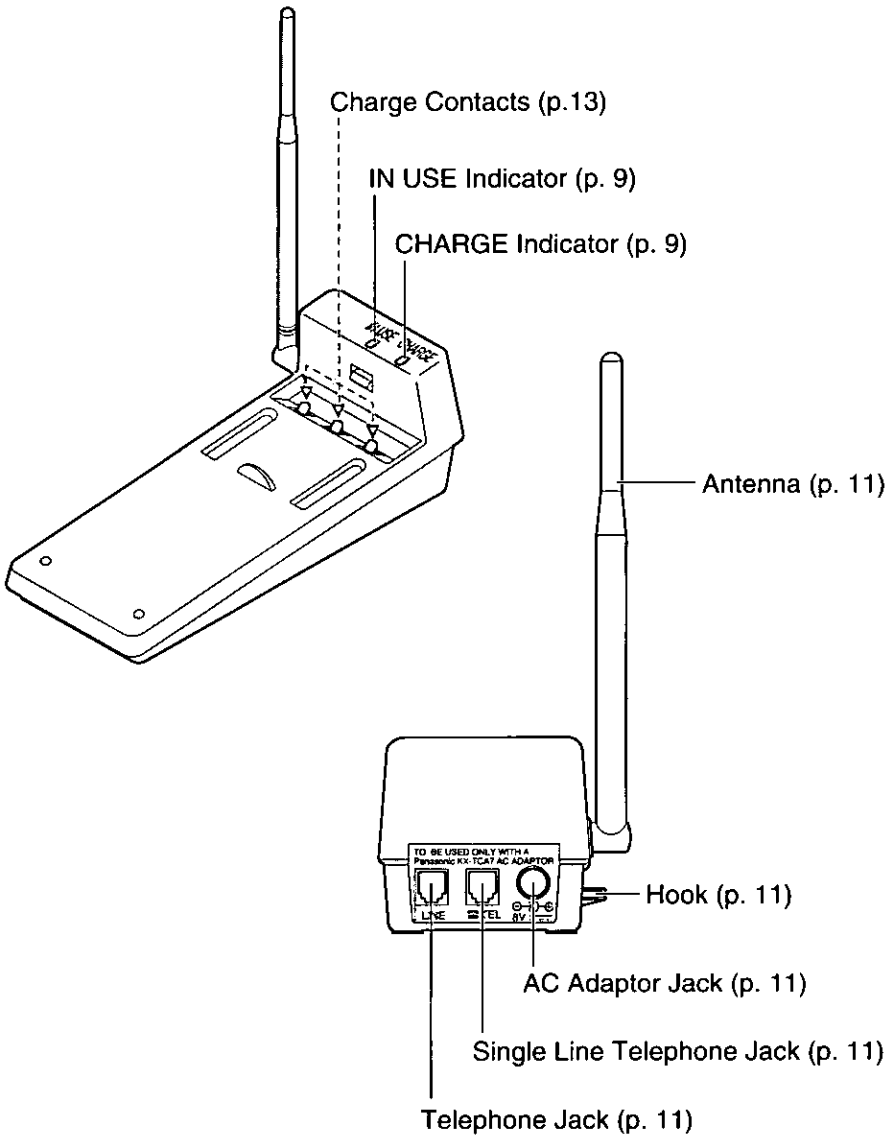

Base unit indicator

CHARGE indicator

Red	The remote unit's battery is being charged. This is normal when the remote unit is on the base unit.
Off	The base unit is in the standby mode.

- If the remote unit is connected to the optional AC adaptor (p. 18):
  - —When the remote unit is placed on the base unit, the CHARGE indicator will not light.
  - —When the unit is not communicating, the battery is charged by the optional AC adaptor.

IN USE indicator

Green	An active connection has been made between the base unit and the remote unit.
Flashing Green rapidly	When the remote unit is turned on, the Indicator will flash rapidly for about 30 seconds.
Flashing Green slowly	The signal is weak. Move the remote unit closer to the base unit quickly and adjust the antenna. If the indicator does not light steady green, communication between the remote unit and the base unit will be terminated within 40 seconds.
Off	The base unit is in the standby mode.

Installing the Battery in the Remote Unit

1 Install the battery as shown observing the proper polarity. The connector is keyed and can only be inserted one way.

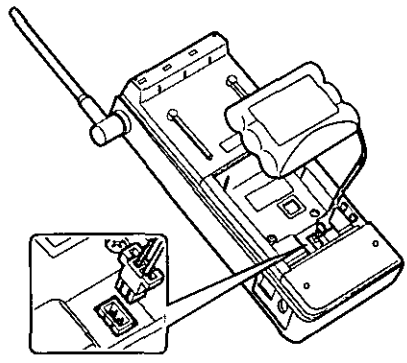

2 Close the remote unit cover.

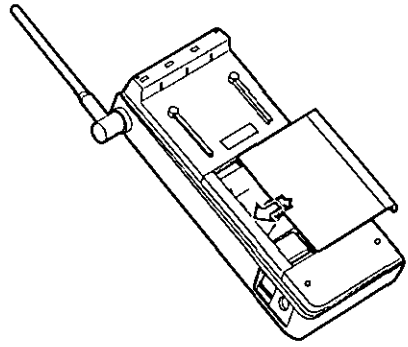

Connection

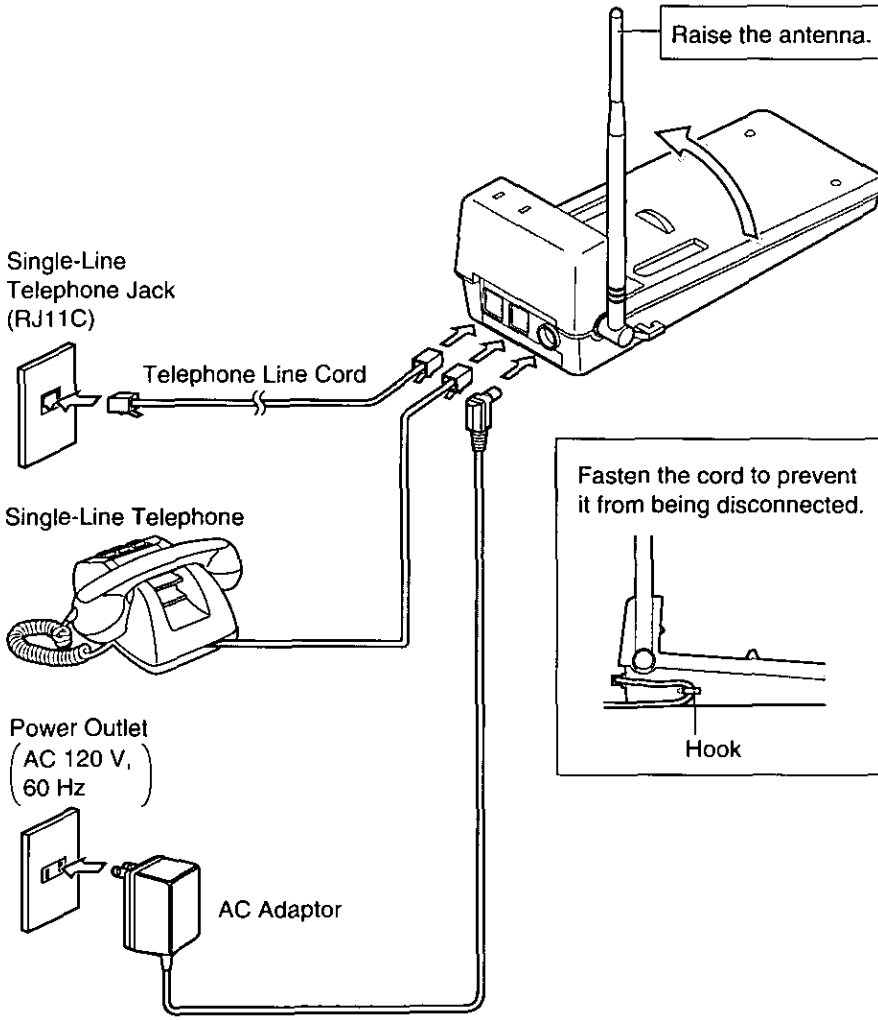

- USE ONLY Panasonic AC ADAPTOR KX-TCA7.
- The AC adaptor must remain connected at all times. (It may feel warm during use. This is normal.)

Battery Charge

Place the remote unit on the base unit for about **15 hours** before initial use.

- The CHARGE indicator lights.

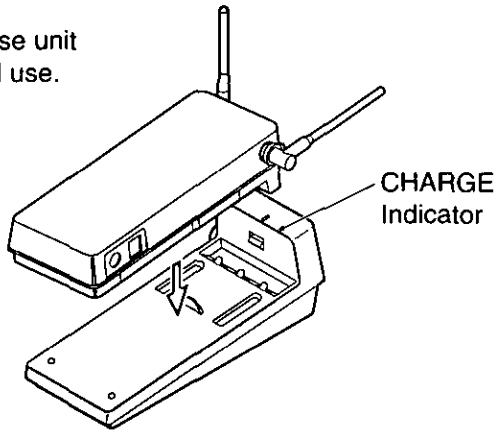

If you purchased an optional AC adaptor for the remote unit, the remote unit must first be placed on the base unit for a few seconds to obtain a security code.
Then lift the remote unit and insert the optional AC adaptor.

Recharge

When the BATT LOW/CHARGE indicator flashes or the unit beeps intermittently, recharge the battery.

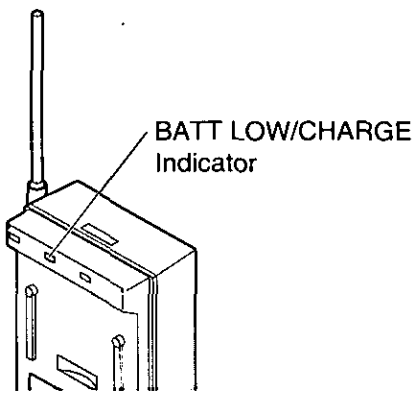

- If all indicators flash when the POWER switch is ON, place the remote unit on the base unit for a few seconds to update the security code.
- If the remote unit is connected to the optional AC adaptor (p. 18):
  - —The BATT LOW/CHARGE indicator remains solid red.
  - —When the remote unit is placed on the base unit, the CHARGE indicator will not light.
  - —When the unit is not communicating, the battery is charged by the optional AC adaptor. The remote unit does not need to be placed on the base unit to charge.

Battery information

If your Panasonic battery is fully charged;

Operation	Approx. Battery Life
While in use (Operation)	Up to about 2.0 hours
While not in use (Stand-By)	Up to about 2.5 days

- Battery life may vary depending on usage conditions and ambient temperature.
- **Clean the remote unit and the base unit charge contacts with a soft dry cloth once a month. Clean more often if the unit is subject to grease, dust or high humidity.** If not, the battery may not charge properly.
- The battery cannot be overcharged.

Mounting the Remote Unit

The remote unit can be mounted on a personal computer.

1 Slide the computer mounting bracket on the remote unit.

- The double-sided tape side should be on the out side.

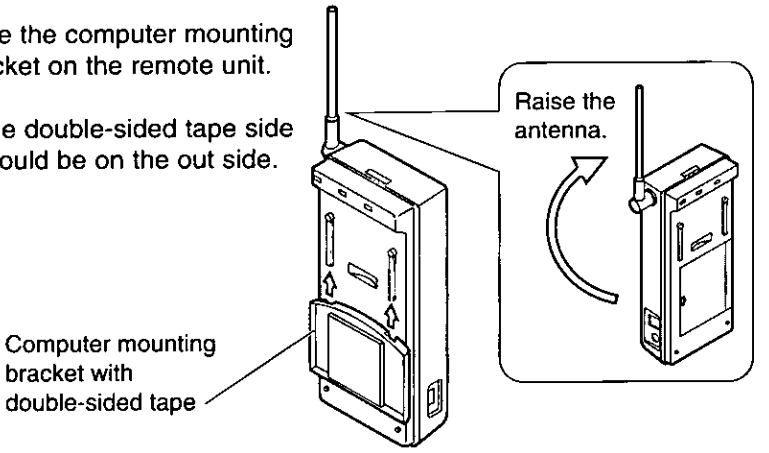

2 Find a convenient place on the back of your laptop screen to mount the remote unit, so that you can see the indicators on the remote unit above your screen.

- Be sure the short telephone line cord reaches the modem jack on the personal computer with full screen movement.

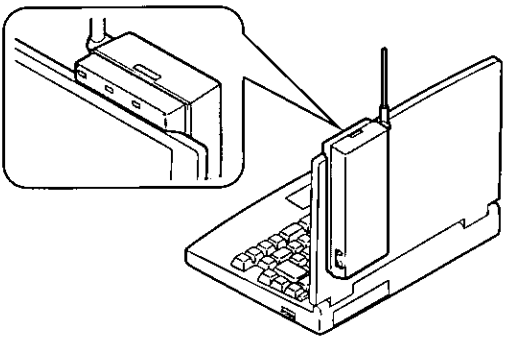

3 Be sure the location is clean and dry. Remove the tape backing from the mounting bracket and position it in place, pressing firmly.

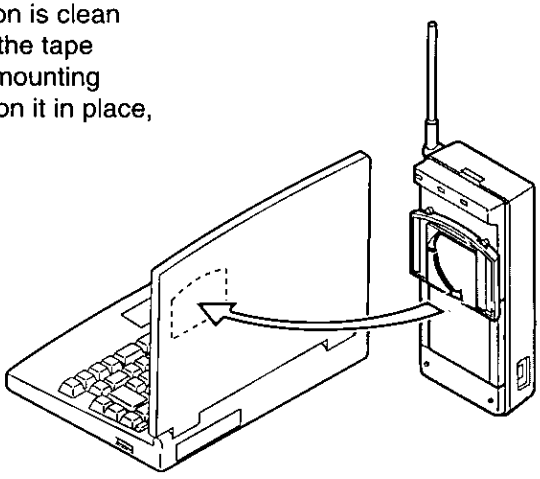

4 Connect the short telephone line cord from the modem jack on the personal computer to the remote unit.

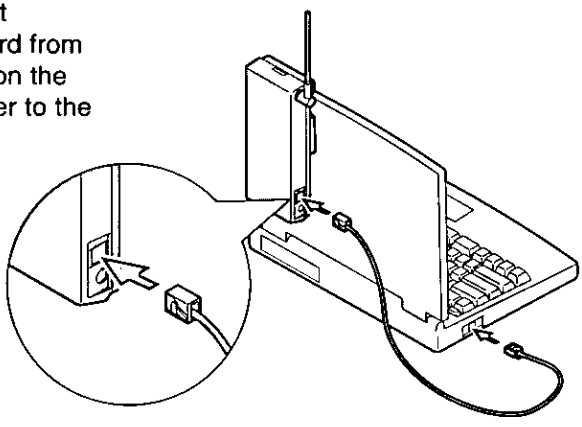

- The double-sided tape uses a strong adhesive. Be careful when removing the computer mounting bracket from a personal computer or you may damage the computer.
- When you change the mounting bracket location, use the attached double-sided tape.

1 Adjust the remote unit's antenna so that it is vertical and slide the POWER switch on the remote unit to the ON position.

- The IN USE/RANGE indicator will flash for a few seconds while the remote unit searches for a clear channel.

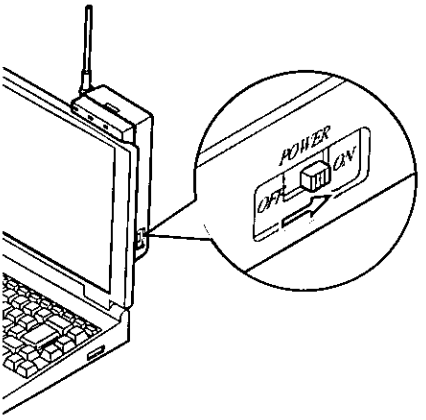

2 Check that the IN USE/RANGE indicator is solid green. The indicator will remain on for about 30 seconds.

- If the IN USE/RANGE indicator is amber or red, move the remote unit closer to the bases unit until the indicator turns green.

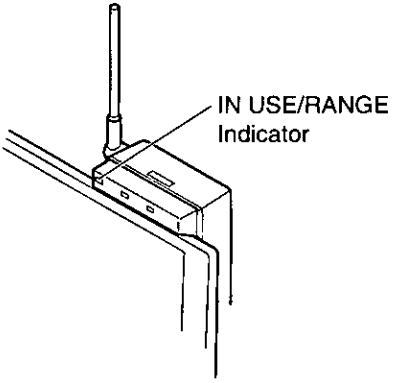

3 Start your communication application.

- The IN USE/RANGE indicator will light while in use.

4 After use, slide the POWER switch OFF.

- At the end of your session, the modem will hang-up the phone line and the unit will enter the standby mode. **If you are not going to start another modem session, turn the remote unit OFF to conserve the battery life.**

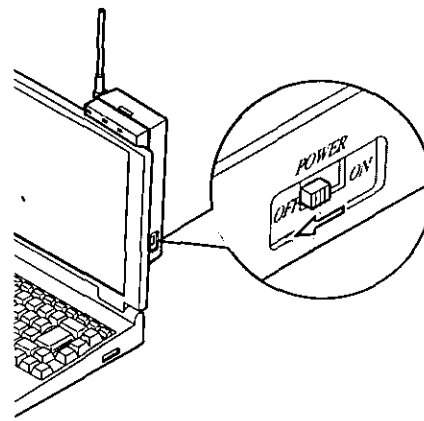

Note:

- When the remote unit is placed on the base unit, the unit will not communicate.
- If you are going to operate the unit for a long time, charge the battery fully before use.
- If the BATT LOW/CHARGE indicator starts to flash while in use, do not place the remote unit on the base unit to charge, or communication will be disconnected. Instead, terminate communications first, then place the remote unit on the base unit to charge.
- We recommend you purchase an optional AC adaptor (p. 18) for the remote unit in order to use the unit for long periods of time.

Receiving an incoming call (Standby Mode)

You may receive incoming data using this unit. Open the application software that you intend to use for the incoming call and prepare to manually answer the call using the application software. When you hear the phone ring at the remote unit, answer it manually.
This unit will not answer incoming calls automatically.

Optional AC Adaptor

An optional AC adaptor is available for the remote unit to extend the usage time of the unit.
Please Purchase a Panasonic KX-TCA7 AC adaptor.
(To order, call 1-800-332-5368.)

Connection

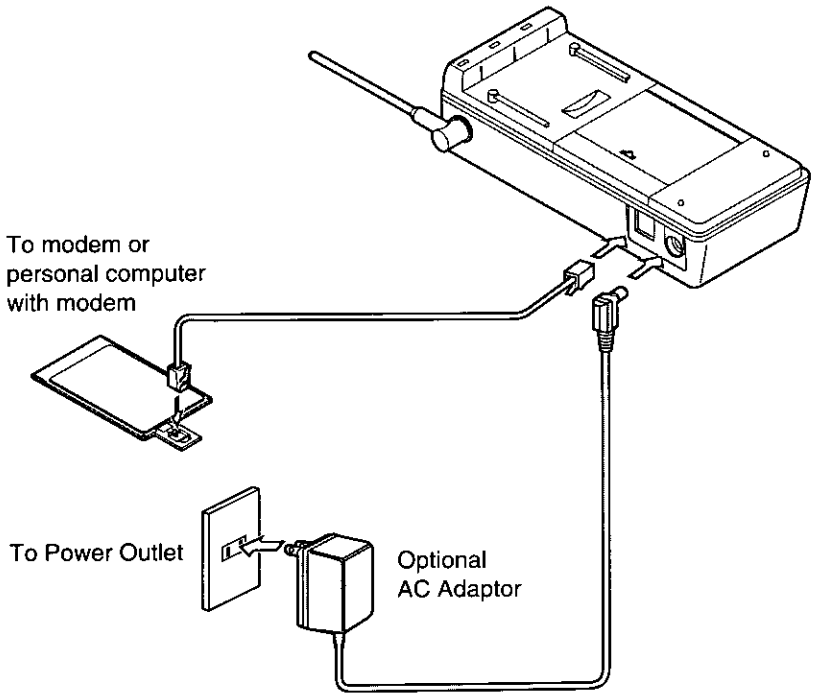

If you purchased an optional AC adaptor for the remote unit, the remote unit must first be placed on the base unit for a few seconds to obtain a security code.
Then lift the remote unit and insert the optional AC adaptor.

Battery Replacement

If the BATT LOW/CHARGE indicator flashes after being fully charged, replace the battery with a new Panasonic KX-TCA8 battery.
(To order, please call 1-800-332-5368.)

1 Set the POWER switch on the remote unit to the OFF position to prevent the security code in memory from being lost.

2 Remove the remote unit cover by sliding it while pressing the arrow.

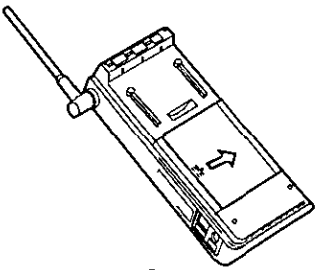

3 Replace the battery, then close the cover.

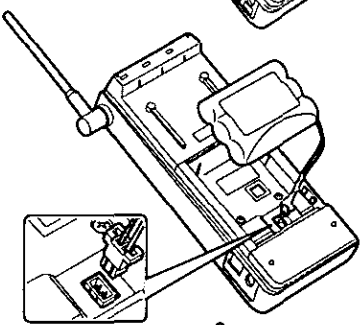

4 Be sure to charge the new battery for about 15 hours.

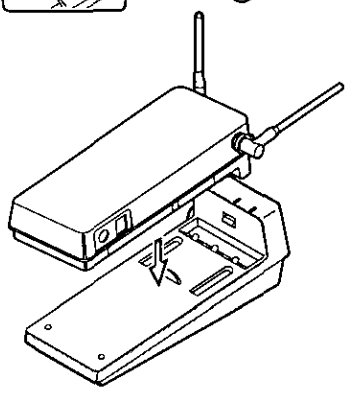

Attention:
The product you have purchased is powered by a nickel cadmium battery which is recyclable. At the end of its useful life, under various state and local laws, it is illegal to dispose of this battery into your municipal waste stream. Please call 1-800-8-BATTERY for information on how to recycle this battery.

R B R C
Ni-Cd

Before Requesting Help

Problem	Remedy
The IN USE/RANGE indicator flashes green.	○This is normal when the remote unit is receiving an incoming call or searching for a clear channel. The indicator will continue to flash during the incoming call or until a channel is selected.
The IN USE/RANGE indicator lights amber.	○The remote unit is too far from the base unit. Move it closer to the base unit and adjust the antenna angle.
The IN USE/RANGE indicator lights red and an alarm tone sounds continuously.	○Move or relocate the remote unit closer to the base unit until the indicator turns green, or communication with the base unit will be terminated within 30 seconds.
The BATT LOW/CHARGE indicator flashes red or the remote unit beeps intermittently.	○Charge the battery fully, or power will be cut off within 10 minutes. ○If you have the optional AC adaptor for the remote unit, connect it to the unit.
You charged the battery fully, but the BATT LOW/CHARGE indicator flashes.	○Clean the charge contacts and charge again (p. 13). ○It is time to change the battery. Please purchase a new battery (p. 19).
The CHARGE indicator light never goes out while charging on the base unit.	○This is normal.
The IN USE indicator flashes green rapidly.	○This is normal. When the remote unit is turned on, the indicator will flash rapidly for about 30 seconds.
The IN USE indicator flashes green slowly.	○Move or relocate the remote unit closer to the base unit. If the indicator does not light steady green, communication with the base unit will be terminated within 40 seconds.

Problem	Remedy
All indicators on the remote unit flash or the communication does not link.	○This indicates the security code has been lost. Place the remote unit on the base unit for a few seconds. If the remote unit is connected to the optional AC adaptor, disconnect the optional AC adaptor and place the remote unit on the base unit.
Several failed link attempts.	○Turn off the POWER switch on the remote unit and then on again to select another clear channel.
The unit does not work.	○Check the settings (p. 10-15). ○Charge the battery fully (p. 12). ○Clean the charge contacts and charge again (p. 13). ○Install the battery properly (p. 10). ○Place the remote unit on the base unit and unplug the AC adaptor to reset. Plug in, then try again. ○Turn off the POWER switch on the remote unit and place the remote unit on the base unit. Then the POWER switch on and try again.
No dial tone message from an application.	○Set the POWER switch on the remote unit to ON. ○Charge the battery fully (p. 12). ○Ensure dial tone is present by connecting a single line phone to the base unit (p. 11). ○If it still does not work, remove the unit and connect the modem directly to the single-line telephone jack on the wall. Be sure the application is operating properly. Reconnect the base unit and the remote unit. If the problem still occurs call the technical support center for service.
If you cannot solve your problem.	○Call our customer satisfaction center at 1-800-922-0028.

Protecting the 900MHz Cordless Data Link

Do not connect this unit to a digital PBX (switchboard) telephone system, as the voltages on digital lines may damage the unit. This unit was designed to function on analog telephone lines, such as those for residential use. When in a hotel, office building, or another building that may use a PBX, please ensure an analog or fax line is available for use with this unit.

Please note that there are digital PBXs that provide analog telephone lines. You must ensure that when the unit is connected to a digital PBX, the telephone line being used is an analog telephone line. Otherwise, the unit may not work properly or may be damaged.

Do not connect this unit to an ISDN line. In some countries, ISDN (digital) lines are being provided for residences and businesses. These lines may damage the unit.

Important Safety Instructions

When using this unit, basic safety precautions should always be followed to reduce the risk of fire, electric shock, or personal injury.

1. Read and understand all instructions.
2. Follow all warnings and instructions marked on this unit.
3. Unplug this unit from AC outlets before cleaning. Do not use liquid or aerosol cleaners. Use a damp cloth for cleaning.
4. Do not use this unit near water, for example, near a bathtub, washbowl, kitchen sink, or the like.
5. Place this unit securely on a stable surface. Serious damage and/or injury may result if the unit falls.
6. Do not cover slots and openings on the unit. They are provided for ventilation and protection against overheating. Never place the unit near radiators, or in a place where proper ventilation is not provided.
7. Use only the power source marked on the unit. If you are not sure of the type of power supplied to your home, consult your dealer or local power company.
8. Do not place objects on the power cord. Install the unit where no one can step or trip on the cord.
9. Do not overload wall outlets and extension cords. This can result in the risk of fire or electric shock.
10. Never push any objects through slots in this unit. This may result in the risk of fire or electric shock. Never spill any liquid on the unit.
11. To reduce the risk of electric shock, do not disassemble this unit. Take the unit to an authorized servicenter when service is required. Opening or removing covers may expose you to dangerous voltages or other risks. Incorrect reassembly can cause electric shock when the unit is subsequently used.

12. Unplug this unit from the wall outlet and refer servicing to an authorized servicenter when the following conditions occur:
    A. When the power supply cord or plug is damaged or frayed.
    B. If liquid has been spilled into the unit.
    C. If the unit has been exposed to rain or water.
    D. If the unit does not work normally by following the operating instructions. Adjust only controls covered by the operating instructions. Improper adjustment may require extensive work by an authorized servicenter.
    E. If the unit has been dropped or physically damaged.
    F. If the unit exhibits a distinct change in performance.
13. During thunderstorms, avoid using telephones except cordless types. There may be a remote risk of an electric shock from lightning.
14. Do not use this unit to report a gas leak, when in the vicinity of the leak.

SAVE THESE INSTRUCTIONS

CAUTION:
To reduce the risk of fire or injury to persons, read and follow these instructions.

1. Use only the battery(ies) specified.
2. Do not dispose of the battery(ies) in a fire. They may explode. Check with local waste management codes for special disposal instructions.
3. Do not open or mutilate the battery(ies). Released electrolyte is corrosive and may cause burns or injury to the eyes or skin. The electrolyte may be toxic if swallowed.
4. Exercise care in handling batteries in order not to short the battery to conductive materials such as rings, bracelets, and keys. The battery and/or conductor may overheat and cause burns.
5. Charge the battery(ies) provided with or identified for use with this product only in accordance with the instructions and limitations specified in this manual.

WARNING:
TO PREVENT FIRE OR SHOCK HAZARD, DO NOT EXPOSE THIS PRODUCT TO RAIN OR ANY TYPE OF MOISTURE.

If requested by the telephone company, inform them as follows:
FCC Registration No. .....(found on the bottom of the unit)
Ringer Equivalence 0.2B
The particular telephone line to which the equipment is connected.

This unit must not be connected to a coin operated line.
If you are on a party line, check with your local telephone company.

Ringer Equivalence No. (REN):
The REN is useful in determining the quantity of devices you may connect to your telephone line and still have all of those devices ring when your telephone number is called. In most, but not all areas, the sum of the REN's of all devices connected to one line should not exceed five (5.0). To be certain of the number of devices you may connect to your line, as determined by the REN, you should contact your local telephone company to determine the maximum REN for your calling area.

In the event terminal equipment causes harm to the telephone network, the telephone company should notify the customer, if possible, that service may be stopped.

However, where prior notice is impractical, the company may temporarily cease service providing that they:

(a) Promptly notify the customer.
(b) Give the customer an opportunity to correct the problem with their equipment.
(c) Inform the customer of the right to bring a complaint to the Federal Communication Commission pursuant to procedures set out in FCC Rules and Regulations Subpart E of Part 68.

The Telephone Company may make changes in its communications facilities, equipment, operations or procedures, where such action is reasonably required in the operation of its business and is not inconsistent with the rules and regulations in FCC Part 68.

If such changes can be reasonably expected to render any customer terminal equipment incompatible with telephone company communications facilities, or require modification or alteration of such terminal equipment, or otherwise materially affect its use or performance, the customer shall be given adequate notice in writing, to allow the customer an opportunity to maintain uninterrupted service.

This device complies with Part 15 of the FCC Rules. Operation is subject to the following two conditions: (1) This device may not cause harmful interference, and (2) this device must accept any interference received, including interference that may cause undesired operation.

CAUTION:
Any changes or modifications not expressly approved by the party responsible for compliance could void the user's authority to operate this device.

Note:
This equipment has been tested and found to comply with the limits for a Class B digital device, pursuant to Part 15 of the FCC Rules. These limits are designed to provide reasonable protection against harmful interference in a residential installation. This equipment generates, uses, and can radiate radio frequency energy and, if not installed and used in accordance with the instructions, may cause harmful interference to radio communications. However, there is no guarantee that interference will not occur in a particular installation. If this equipment does cause harmful interference to radio or television reception, which can be determined by turning the equipment off and on, the user is encouraged to try to correct the interference by one or more of the following measures:
—Reorient or relocate the receiving antenna.
—Increase the separation between the equipment and receiver.
—Connect the equipment into an outlet on a circuit different from that to which the receiver is connected.
—Consult the dealer or an experienced radio/TV technician for help.

- **Environment**—do not place the unit in room where the temperature is less than 5°C (41°F) or greater than 40°C (104°F). Allow 10 cm (4″) clearance around the unit for proper ventilation. Avoid excessive smoke, dust, mechanical vibration, shock, or direct sunlight.
- **Routine care**—wipe the unit with a soft cloth. Do not use benzine, thinner, or any abrasive powder. When you left the unit unused for long time, unplug the AC adaptor from the outlet.
- **If there is any trouble**—disconnect the unit from the telephone line and connect a known working phone. If the known working phone operates properly, have your unit repaired by one of the authorized Panasonic Factory Service Centers. If the known working phone does not operate properly, consult with your telephone company.

For product service

- Panasonic Servicenters are listed in the servicenter directory.
- Call 1-800-545-2672 for the location of an authorized servicenter.

When you ship the product

- Carefully pack your unit, preferably in the original carton.
- Attach a letter, detailing the symptom, to the outside of the carton.

Symptom

- Send the unit to an authorized servicenter, prepaid and adequately insured.
- Do not send your unit to the Panasonic Consumer Electronics Company listed on the back cover or to executive or regional sales offices. These locations do not repair consumer products.

- This product is designed for use in the United States of America. Sale or use of this product in other countries may violate local laws.
- Ce appareil est conçu pour être utilisé aux États-Unis d'Amérique. La vente ou l'emploi de cet appareil dans certains autres pays peut constituer une infraction à la législation locale.
- Este producto fue elaborado para uso en los Estados Unidos de América. La venta o el empleo de este producto en ciertos países puede constituir violación de la legislación local.
- この製品は、日本国外での使用を目的として設計されており、日本国内での使用は法律違反となります。従って、当社では日本国内においては原則として修理などのサービスは致しかねます。

Panasonic Consumer Electronics Company,
Division of Matsushita Electric Corporation of America
One Panasonic Way, Secaucus, New Jersey 07094

Panasonic Sales Company,
Division of Matsushita Electric of Puerto Rico, Inc.
Ave. 65 de Infantería, Km. 9.5, San Gabriel Industrial Park
Carolina, Puerto Rico 00985

Printed in Japan **PQQX11823ZA** KF0897NY0 ©