A-SMDR-A

PRINTED CIRCUIT BOARD

INSTALLATION MANUAL

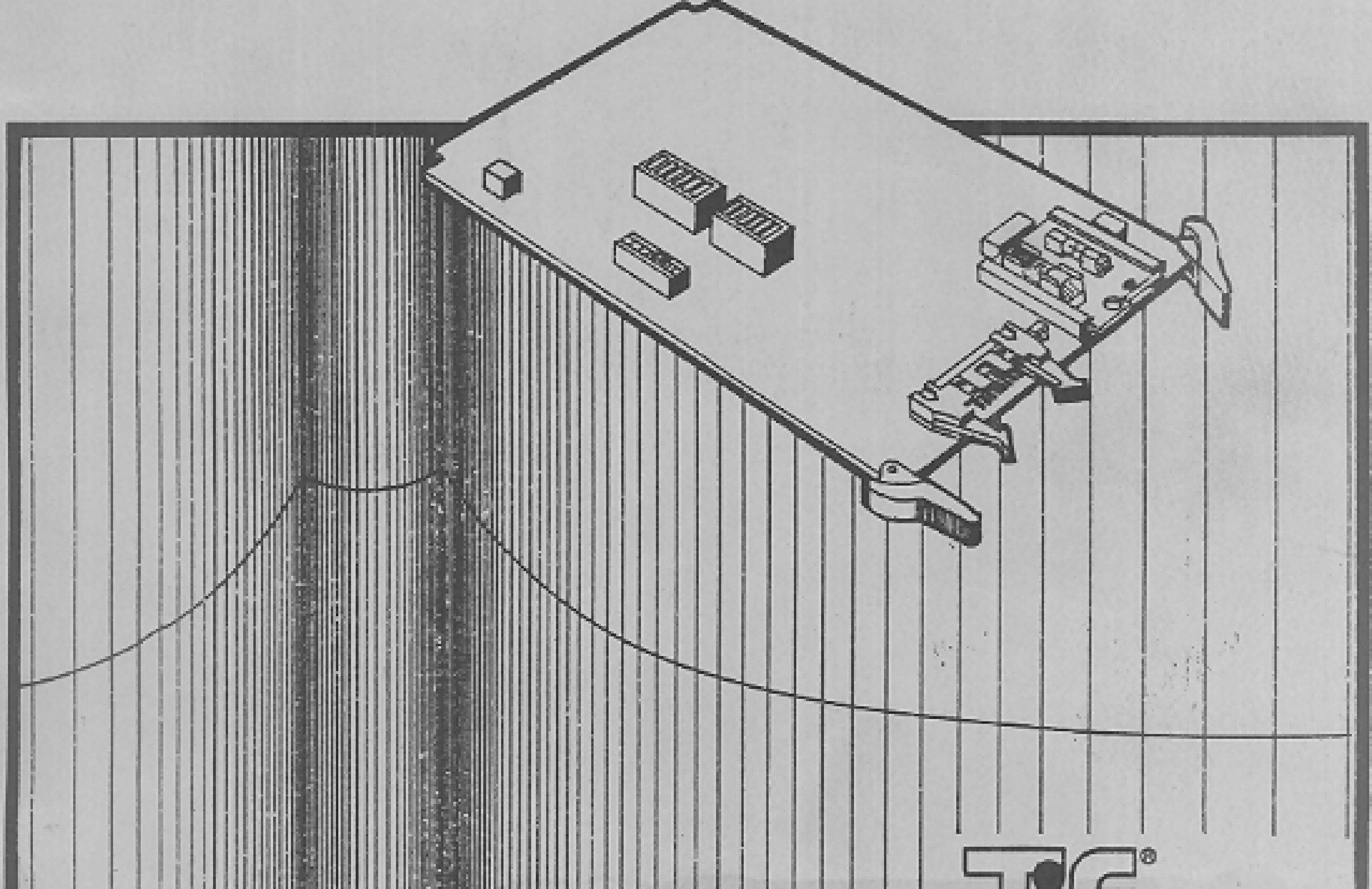

5 Research Drive Shelton, CT 06484, U.S.A.
(203) 929-7373 TELEX: 643104

A-SMDR-A

PRINTED CIRCUIT BOARD

INSTALLATION MANUAL

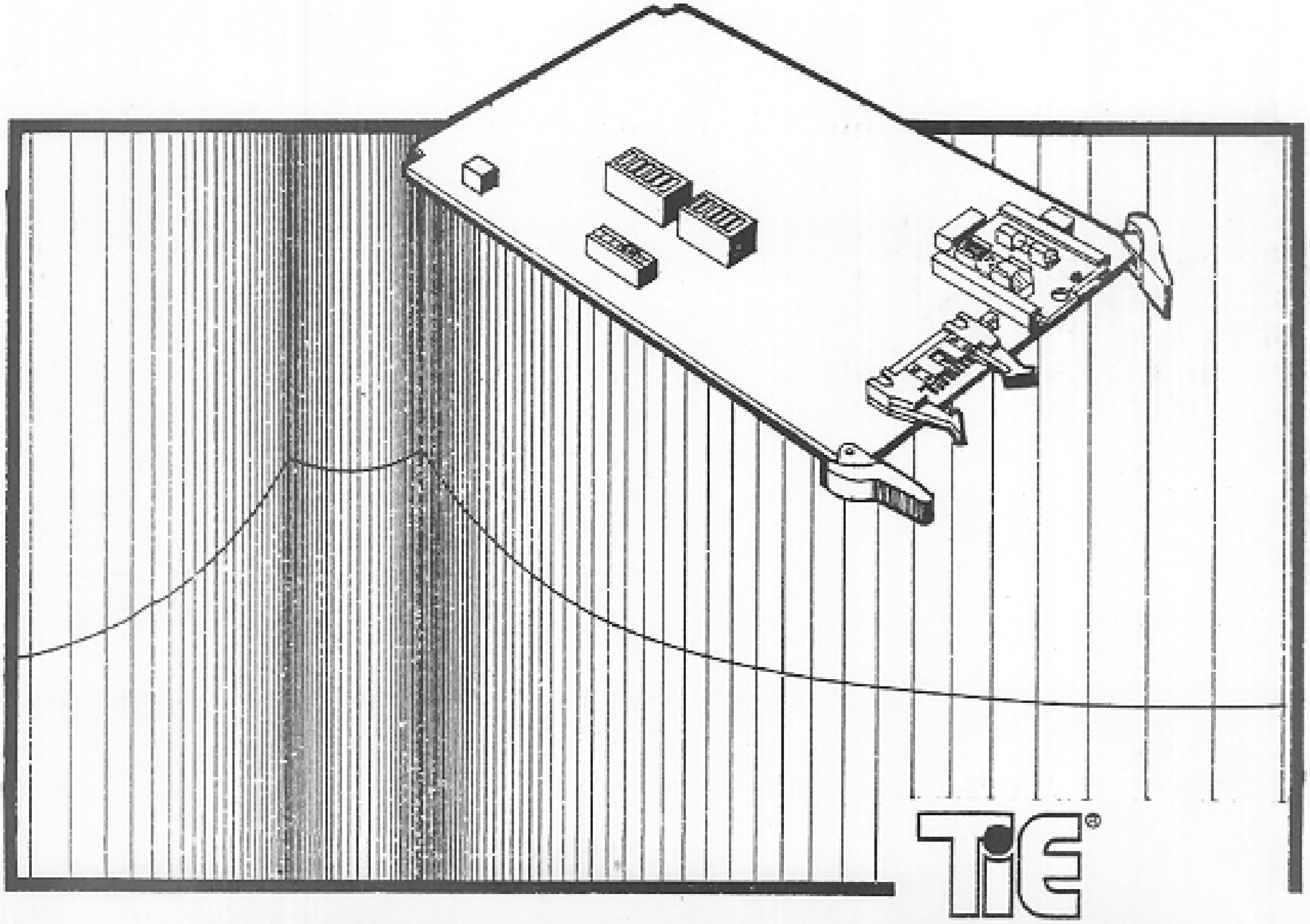

5 Research Drive Shelton, CT 06484, U.S.A.
(203) 929-7373 TELEX: 643104

A-SMDR-A PCB
GENERAL DESCRIPTION

CONTENTS PAGE

1. INTRODUCTION 1-1
Related Sections 1-1

2. PCB DESCRIPTION 1-1

3. COMPONENTS 1-2

1. INTRODUCTION

1.01 The GENERAL DESCRIPTION section provides a basic introduction of the A-SMDR-A Printed Circuit Board (PCB). This PCB is used in conjunction with TC-12/TC-22 key telephone systems.

1.02 If this section is reissued, then the reason for the reissue will appear in this location.

RELATED SECTIONS

1.03 Related sections on the A-SMDR-A include:

SECTION 2 --- FEATURES
SECTION 3 --- SYSTEM CONFIGURATION
SECTION 4 --- PROGRAM RECORD AND PCB OPTION FORMS PREPARATION
SECTION 5 --- INSTALLATION
SECTION 6 --- PROGRAMMING
SECTION 7 --- OPERATIONAL TESTS AND FAULT LOCATION

2. PCB DESCRIPTION

2.01 The A-SMDR-A PCB provides Station Message Detail Recording data, such as class of call, date and time made, duration, and telephone number dialed, as well as account codes. This data enables a customer to more efficiently and economically manage the operation of a TC-12 or TC-22 key telephone system.

2.02 The data sent by an A-SMDR-A PCB is ASCII coded and sent to a customer supplied RS232C compatible cable and recording device. The A-SMDR-A is a data communications equipment with a Type C interface.

2.03 The A-SMDR-A PCB is supplied with a Battery Terminal Board (BTB-A), a 3-volt battery and an Installation Kit. This kit contains an interface cable and jack assembly.

3. COMPONENTS

3.01 The A-SMDR-A PCB has two DUAL-IN-LINE PACKAGE (DIP) switch assemblies, each containing 8 switches, and a single, 8-position DIP slide switch (refer to figure 1-1). Switch assembly SW1 controls various PCB options. Switch assembly SW2 has been incorporated for implementing future options, and slide switch SW3 sets the rate data is transmitted to the recording device. This PCB also contains the system operating software, the programs and memory for controlling the printing options, and the formatting of station message data to be transmitted. In addition, the A-SMDR-A contains a buffer that can store station message data for up to eight calls per CO line when the recorder is busy.

3.02 The BTB-A PCB contains connecting pins, battery clips, fuse clips, a 0.25 Ampere fuse, and a push-to-lock fastener to attach it to the A-SMDR-A PCB (refer to figure 1-1). With battery installed, the BTB-A provides battery power to the real-time clock on the A-SMDR-A during power failure. A fully charged battery can maintain the clock operation of up to one year. The battery, which is fuse-protected against accidental short circuit on the A-SMDR-A PCB or improper battery installation, can be replaced without removing the A-SMDR-A. The battery supplied is a 3-volt, non-rechargeable, lithium battery; designation BR-2/3A, 3V (TIE part No. 12364).

CAUTION: Removing the A-SMDR-A causes loss of system operation.

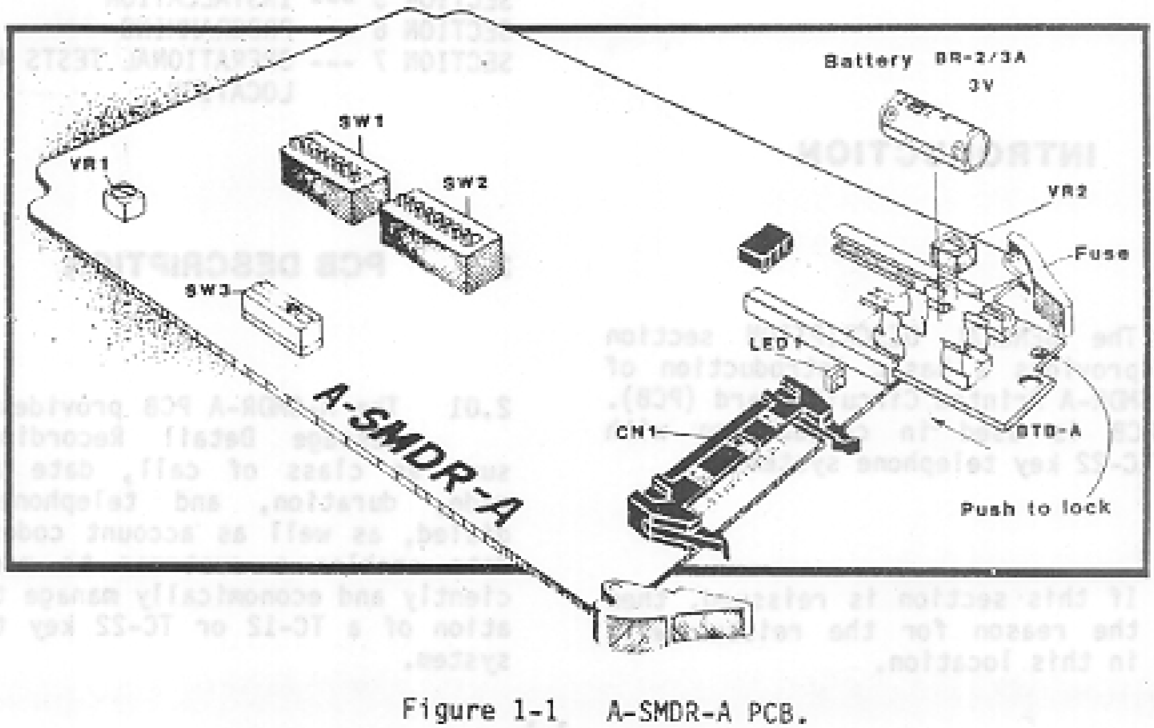

Figure 1-1 A-SMDR-A PCB.

3.03 The interface cable and jack assembly for the A-SMDR-A consists of a flat cable and a panel (refer to figure 1-2). The cable is terminated on one end with a connector which plugs into the A-SMDR-A (refer to figure 1-3). The other end terminates into a standard EIA RS232 connector mounted on the panel used to connect the printer/recorder device. The interface panel measures approximately 2 x 6 inches (5.1 x 15.2 cm). The panel includes a printer status switch, that informs the A-SMDR-A when the recorder is busy, (i.e. out of service for a paper change). An LED has been added for future use. The RS-232 connector pin out is shown in figure 1-4.

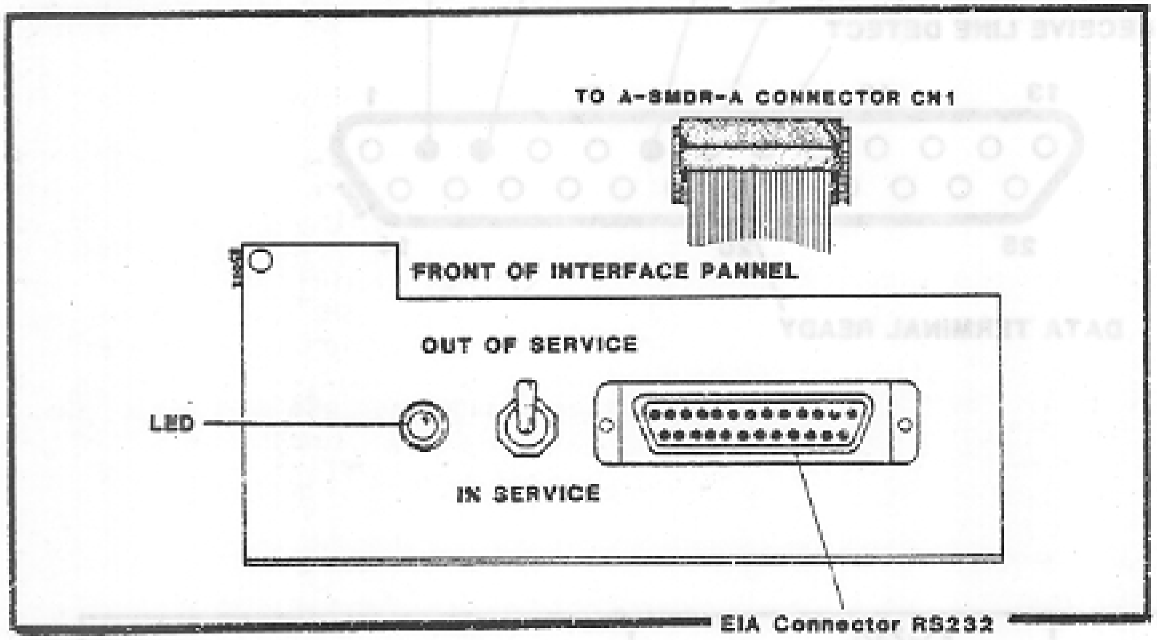
TO A-SMDR-A CONNECTOR CN1
FRONT OF INTERFACE PANNEL
OUT OF SERVICE
LED
IN SERVICE
EIA Connector RS232

Figure 1-2 A-SMDR-A Panel.

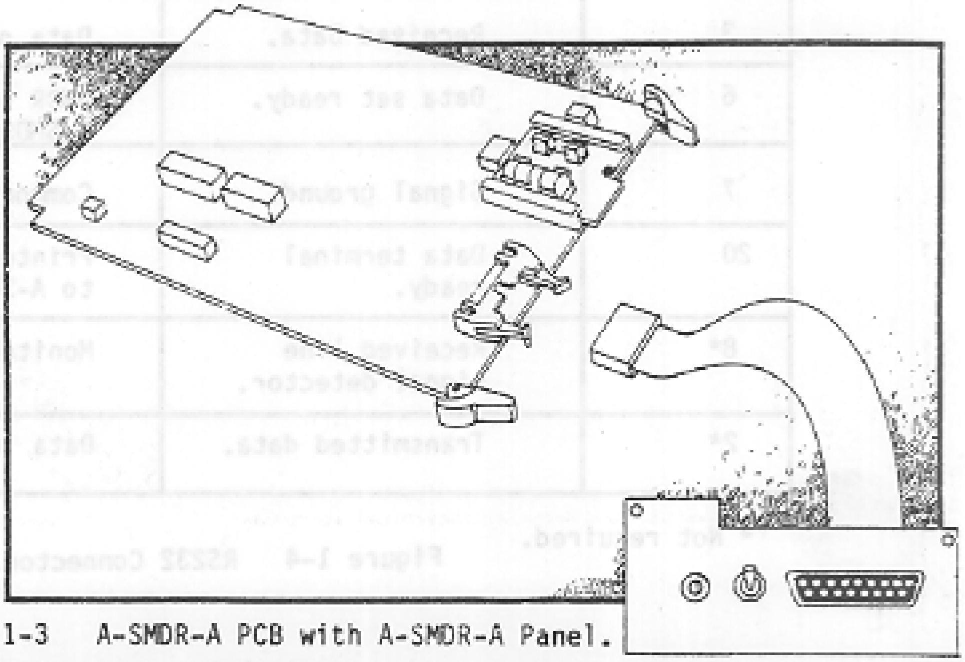

Figure 1-3 A-SMDR-A PCB with A-SMDR-A Panel.

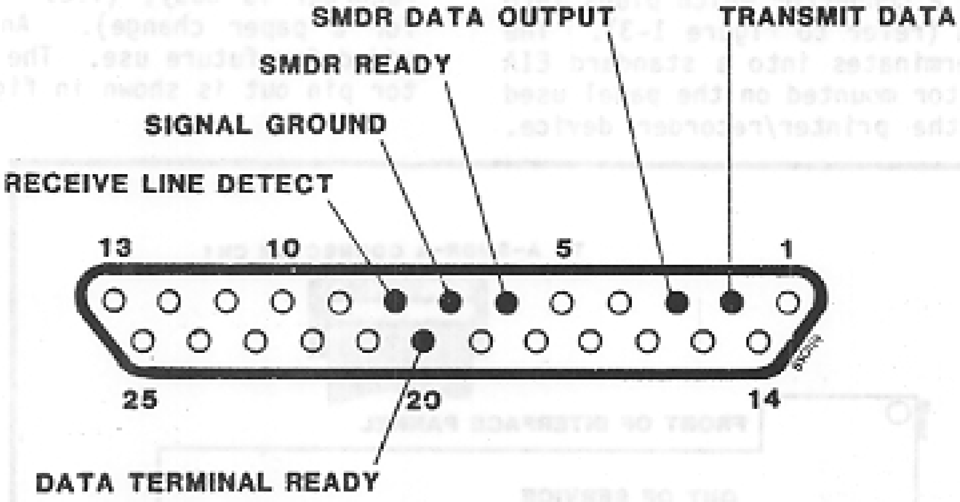
SMDR DATA OUTPUT
TRANSMIT DATA
SMDR READY
SIGNAL GROUND
RECEIVE LINE DETECT
13
10
5
1
25
20
14
DATA TERMINAL READY

PIN #	RS-232C DESIGNATION	FUNCTION
3	Received Data.	Data output from A-SMDR-A.
6	Data set ready.	SMDR ready signal from A-SMDR-A.
7	Signal ground.	Common ground reference.
20	Data terminal ready.	Printer/Recorder ready signal to A-SMDR-A.
8*	Received line signal detector.	Monitor for pin #2.
2*	Transmitted data.	Data input to A-SMDR-A.

* Not required.

Figure 1-4 RS232 Connector.

A-SMDR-A PCB

FEATURES

CONTENTS PAGE

1. INTRODUCTION 2-1
Related Sections 2-1

2. STANDARD FEATURES. 2-1
Account Code Entry 2-1
Buffer Memory 2-2
Buffer Overflow Indication . . . 2-3
All Trunks Busy. 2-3

3. OPTION FEATURES. 2-3
Option Switch SW1. 2-3
Option Switch SW2. 2-3
Variable Baud Rate 2-3

4. OUTPUT DATA FORMAT 2-5

1. INTRODUCTION

1.01 The section provides a description of the A-SMDR-A standard and optional features.

1.02 If this section is reissued, then the reason for reissue will appear in this location.

RELATED SECTIONS

1.03 Related sections on the A-SMDR-A include:

SECTION 1 --- GENERAL DESCRIPTION
SECTION 3 --- SYSTEM CONFIGURATION
SECTION 4 --- PROGRAM RECORD AND PCB OPTION PREPARATION FORMS
SECTION 5 --- INSTALLATION
SECTION 6 --- PROGRAMMING
SECTION 7 --- OPERATIONAL TESTS AND FAULT LOCATION

2. STANDARD FEATURES

2.01 Following are descriptions of the standard features.

ACCOUNT CODE ENTRY

2.02 An ACCOUNT CODE ENTRY is provided as a part of the station message detail. This code (up to 8 digits) is entered by the station user in the following sequence: #, code digits, #. Other parties on the line are unable to detect the account code entry.

NOTE: Off premise stations and dial restricted stations will be unable to enter account codes.

BUFFER MEMORY

2.03 The BUFFER MEMORY stores SMDR data for up to eight calls per CO line. This permits sufficient time to change paper on the recording device. Data will be stored in the buffer when the printer status switch is placed in the OUT OF SERVICE position indicating that the printer is out- of-service (refer to figure 2-1). When the recorder is returned to service by placing the printer status switch in the IN-SERVICE position, the A-SMDR-A automatically transmits a new heading line (refer to figure 2-2) followed by the SDMR data stored in the buffer.

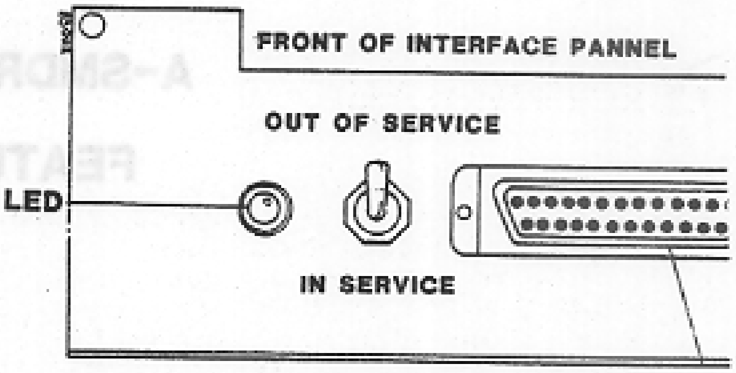

Figure 2-1 Printer Status Switch.

2.04 When the terminal is sufficiently sophisticated, the buffer may be employed via the data terminal READY lead. However, a new heading line is not printed on return to service.

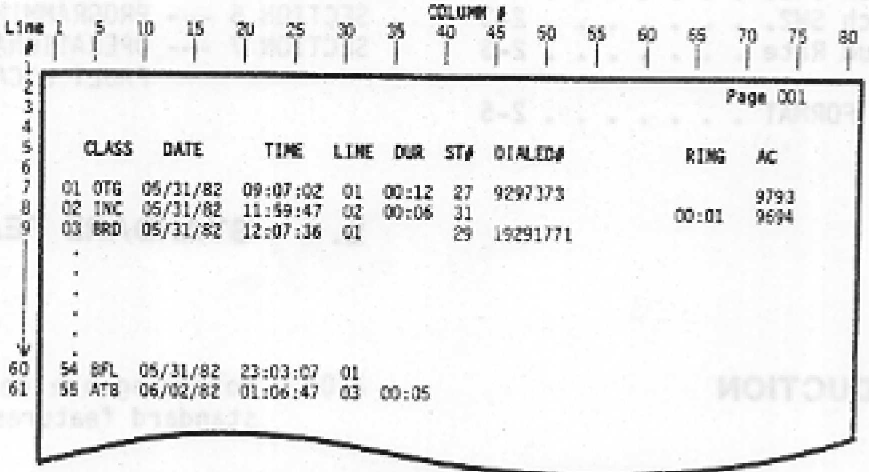

```
                                                            Page 001

  CLASS   DATE       TIME     LINE  DUR    ST#  DIALED#               RING    AC

01 OTG  05/31/82  09:07:02  01   00:12  27   9297373                       9793
02 INC  05/31/82  11:59:47  02   00:06  31                         00:01  9694
03 BRD  05/31/82  12:07:36  01          29   19291771
 .
 .
 .
 .
 .
 .
54 BFL  05/31/82  23:03:07  01
55 ATB  06/02/82  01:06:47  03  00:05
```

Class	Description
OTG	Outgoing Call
INC	Incoming Call
BRD	Barred (restricted) call attempted
BFL	Buffer Overflow
ATB	All trunks Busy in (Queue) Group

Figure 2-2 Sample Data Output Printout.

BUFFER OVERFLOW INDICATION

2.05 If, during the time that the printer is out-of-service, more than eight calls on a CO line are made, the BUFFER OVERFLOW INDICATION will be printed on the hour after the printer is returned to service. This indication includes the date, time, and number of calls missed.

ALL TRUNKS BUSY

2.06 An ALL TRUNKS BUSY (ATB) printout indicates that all lines in a group have been busy for more than one minute. When one or more of the lines in the Queue Group Program 40 have returned to an idle state for more than one minute, the ATB data is transmitted to the printer/recorder.

NOTE: The data transmitted indicates the Queue Group involved under the LINE field.

3. OPTION FEATURES

OPTION SWITCH SW1

3.01 OPTION SWITCH SW1 is used to select optional features. SW1 is a DIP switch assembly containing eight Single Pole, Single Throw (SPST) switches. The SPST switches are numbered SW1-1 to SW1-8. The optional features and switch controls are outlined in Table 2-1.

NOTE: Switch SW1-8 is not presently used and should be set to the off position.

OPTION SWITCH SW2

3.02 OPTION SWITCH SW2 is a DIP switch assembly that contains eight SPST switches numbered SW2-1 to SW2-8. This switch assembly is not used at this time and the position of all SPST switches on SW2 should be off.

VARIABLE BAUD RATE

3.03 Slide switch, SW3, provides a VARIABLE BAUD RATE for transmitting SMDR data to a recording device. The settings for this switch, from right to left are (refer to figure 2-3):

POS.	RATE (bits/second)
1	150
2	300
3	600
4	1200
5	2400
6	4800

NOTE: A baud rate of 2400 or less is recommended.

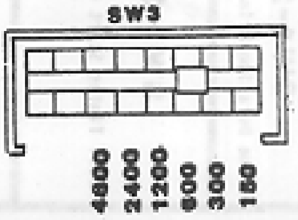

Figure 2-3 Variable Baud Rate Settings.

SWITCH NO.	OPTION "OFF"	OPTION "ON"	* "NOTES"
SW1-1 Outgoing Call Print Option	* Allows transmission of SMDR data to the recording device only when the number dialed for an outgoing call exceeds 7 digits (i.e., no local calls are recorded.)	* Allows transmission of SMDR data to the recording device for all outgoing calls.	With either setting, when the line is behind a PBX, the data will be transmitted only if the PBX CO line access code has been dialed.
SW1-2 Time Duration Print Option	* Allows transmission of SMDR data to the recording device when the call duration is greater than one minute.	* Allows transmission of SMDR data to the recording device regardless of the call duration.	Call Duration time is always indicated to the next highest minute.
SW1-3 Call Timing Start Option	* Causes the timing of call durations to start immediately after dialing.	* Causes the timing of call durations to start 4.8 seconds after dialing. This prevents calls from being recorded if a busy signal is encountered and the call is immediately terminated.	If the "Time Duration Print" option is set to OFF and the "Call Start Timing" option is set to ON, SMDR data will not be recorded for calls which are less then one minute 4.8 seconds long. Thus, outgoing calls which receive busy signals, no answer, or wrong numbers will not be recorded.
SW1-4 Account Code Entry Option	* Requires an account code to be entered in order to dial an outgoing call. With this setting, unless an account code is entered, only ICM calls and internal PBX calls are permitted. Dialing on an outside line is denied.	Does not require an account code to be dialed for outgoing calls. An account code may be entered at any time before a call is terminated.	Off-premises station users cannot dial "#". Therefore, the OFF option should not be used if OP station users must make outside calls. When an account code is not required, the key set station user can still enter an account code at any time during the call.
SW1-5 Incoming Call Print Option	* SMDR data will be transmitted to the recording device for incoming calls only if an account code is entered at some time during the duration of a call.	SMDR data will be transmitted for all incoming calls.	The account code may be entered either by the attendant or at the destination station of the call (except for off-premises destinations). The number of the last station to receive the incoming call will be recorded.
SW1-6 Restricted Call Print Option	* SMDR data will be transmitted for all restricted calls attempted.	* SMDR data will not be transmitted for any restricted calls attempted.	If the system is behind a PBX, a call will not be considered restricted (under toll restriction) unless a PBX access code is dialed.
SW1-7 Off-Hook Alert Tone Option	A beep tone will be heard on the line every three minutes when a station is off-hook on an outgoing CO line. All parties on the line can hear the beep.	No beep tone will be heard.	
SW1-8	**PUT IN OFF POSITION**	**PUT IN OFF POSITION**	**NOT USED**

Table 2-1 Selectable Switch Options.

4. OUTPUT DATA FORMAT

4.01 The output format for data sent to the recorder is a 7-bit ASCII code with no parity bit. Data is transmitted one-way with a start bit and one stop bit.

4.02 Data output is printed according to the format shown in Figure 2-2. The A-SMDR-A automatically provides the line feed operation.

4.03 The Dialed Number Field, beginning at column 45, can accommodate up to 24 digits for outgoing calls. These digits extend into the Incoming Ring Field which is not used during the time of outgoing calls. Automatic line feed operation is provided by the A-SMDR-A.

A-SMDR-A PCB

SYSTEM CONFIGURATION

CONTENTS PAGE

1. INTRODUCTION 3-1
Related Sections 3-1

1. INTRODUCTION

1.01 The SYSTEM CONFIGURATION section is not applicable to the A-SMDR-A. Therefore, refer to the Installation manual for the system.

RELATED SECTIONS

1.02 Related sections on the A-SMDR-A include:

SECTION 1 --- GENERAL DESCRIPTION
SECTION 2 --- FEATURES
SECTION 4 --- PROGRAM RECORD AND PCB OPTION FORMS PREPARATION
SECTION 5 --- INSTALLATION
SECTION 6 --- PROGRAMMING
SECTION 7 --- OPERATIONAL TESTS AND FAULT LOCATION

A-SMDR-A PCB PROGRAM RECORD AND PCB OPTION FORMS PREPARATION

CONTENTS PAGE

1. INTRODUCTION 4-1
   Related Sections 4-1

2. A-SMDR-A PROGRAMS 4-1
   PROGRAM 21 - Line Ring Groups . 4-2
   PROGRAM 22 - Ring Group Stations 4-2
   PROGRAM 23 - Common Audible . . 4-3
   PROGRAMS 24 & 25 4-3
   PROGRAMS 26, 27 & 28 - Date/Time 4-3

3. PCB OPTION FORM PREPARATION . . 4-4

1. INTRODUCTION

1.01 The PROGRAM RECORD and PCB OPTION FORMS PREPARATION section provides information regarding preparation of the PCB option form and the program record form. These forms should be completed before the A-SMDR-A is installed.

1.02 If this section is reissued, then the reason for the reissue will appear in this location.

RELATED SECTIONS

1.03 Related sections on the A-SMDR-A include:

SECTION 1 --- GENERAL DESCRIPTION
SECTION 2 --- FEATURES
SECTION 3 --- SYSTEM CONFIGURATION
SECTION 5 --- INSTALLATION
SECTION 6 --- PROGRAMMING
SECTION 7 --- OPERATIONAL TESTS AND FAULT LOCATION

1.04 When the A-SMDR-A is installed in an existing system, transcribe the entry data for the remaining programs from the old Program Record Form to the form provided with this section. If it is a new installation, then complete the form provided in this section by using the instructions contained in the Installation Manual provided with the system and the instructions for Program 21 to 28 as covered in this manual.

2. A-SMDR-A PROGRAMS

2.01 The PROGRAM RECORD FORM (refer to figure 4-1) is used to record the data inputs required for system programming or reprogramming. Detailed information is provided on each changed program to allow for proper entry of codes. Some programming is changed from a basic system (i.e., an A-MPU PCB and no software feature PCBs) to allow for the SMDR features. The following paragraphs provide detailed information for establishing Program Record Form entry codes.

PROGRAM 21 - LINE RING GROUPS

2.02 LINE RING GROUPS (Program 21) assigns separate line ring groups. This program combines programs 21, 22, and 23, found in the TC-12/TC-22 Manual.

2.03 The following conditions must be satisfied before the entry codes are determined:

(1) A private line can not be assigned to a Ring Group.

(2) Entries can not exceed the maximum number of common (non-private) lines in the system.

(3) A CO line can be assigned to only one ring group.

(4) If 1 was entered in Program 20, at least one line must be entered in Program 21.

(A) RING GROUP 1 LINES (Program 21) are the lowest numbered lines in the system. Any number of CO lines can be assigned to the first Line Ring Group, up to the maximum number of common CO lines in the system. Write the last CO line number in the CD boxes of program 21, Ring Group 1. Example: if lines 1, 2, and 3 are in Ring Group 1, then write 03 in the CD boxes.

(B) RING GROUP 2 LINES (Program 21) are the lowest numbered lines immediately following Ring Group 1 lines. Any number of lines not assigned to Ring Group 1, up to the maximum number of common lines, can be assigned to line Ring Group 2. Write the last line number in the CD boxes of Program 21, Ring Group 2. Example: if lines 4, 5, and 6 are in this group, then write 06 in the CD boxes.

(C) RING GROUP 3 LINES (Program 21) are lines immediately following Ring Group 2 lines. Any number of lines not assigned to Ring Groups 1 and 2, up to the maximum number of common lines, may be assigned to line Ring Group 3. Write the last line number in the CD boxes of Program 21, Ring Group 3. Example: if lines 7, 8, and 9 are in this group, write 09 in the CD boxes.

(D) RING GROUP 4 LINES are lines immediately following Ring Group 3 lines and by default are all remaining common lines in the system. Example: if the system is a TC-12 system with no private lines, and the last line in line Ring Group 3 was 9, line Ring Group 4 consists of lines 10 through 12 inclusive. No entry is required on the form for this group.

PROGRAM 22 - RING GROUP STATIONS

2.04 RING GROUP STATIONS (Program 22) combines old programs 24, 25, 26 and 27. Stations assigned to a ring group receive incoming audible for the lines assigned in the ring group (program 21). Example: if lines 1, 2 and 3 are in line ring group 1, and station 25 is assigned as a group 1 station, it will receive CO audible from lines 1, 2 and 3. The following conditions must be satisfied before the entry codes are determined:

(a) A station can be assigned to only one ring group.

(b) If a station is assigned to a ring group, then it cannot be assigned to the COMMON AUDIBLE GROUP. However, it can be assigned to the NIGHT TRANSFER GROUP.

(c) Station numbers assigned to any ring group must be valid numbers.

(A) GROUP 1 STATIONS (Program 22) can receive CO audible from the lines in Ring Group 1. A maximum of 10 stations can be assigned as GROUP 1 STATIONS. Write the station numbers in the CD boxes for Program 22, Ring Group 1. If less than ten stations are in the group, write 00 as the last station.

(B) GROUP 2 STATIONS (Program 22) can receive CO audible from the lines in Ring Group 2. A maximum of 10 stations can be assigned as GROUP 2 STATIONS. Write the station numbers in the CD boxes for Program 22, Ring Group 2. If less than ten stations are in the group, write 00 as the last station.

(C) GROUP 3 STATIONS (Program 22) can receive CO audible from the lines in Ring Group 3. A maximum of 10 stations can be assigned as GROUP 3 STATIONS. Write the station numbers in the CD boxes for Program 22, Ring Group 3. If less than ten stations are in the group, write 00 as the last station.

(D) GROUP 4 STATIONS (Program 22) can receive CO audible from the lines in Ring Group 4. A maximum of 10 stations can be assigned as GROUP 4 STATIONS. Write the station numbers in the CD boxes for Program 22, Ring Group 4. If less than ten stations are in the group, write 00 as the last station.

PROGRAM 23 - COMMON AUDIBLE

2.05 COMMON AUDIBLE (Program 23) is CO audible from all CO lines that are not private lines. A maximum of ten stations can be common audible stations. Common audible stations cannot be in any other ring group.

NOTE: The initialization program assigns the primary attendant's telephone as the first station and the secondary attendant's telephone as the second station in the COMMON AUDIBLE GROUP. However, this assignment can be changed.

2.06 The following conditions must be satisfied before the entry codes are determined:

(a) If a station is assigned to the COMMON AUDIBLE GROUP, it cannot be assigned to any LINE RING GROUP, or the NIGHT TRANSFER GROUP.
(b) Only valid station numbers are programmed.

Entry: Enter the station numbers in the CD boxes of Program 23 for all COMMON AUDIBLE stations. If less than ten stations are in the group, write 00 as the last station.

PROGRAMS 24 & 25

2.07 PROGRAMS 24 & 25 are not used with the A-SMDR-A.

PROGRAMS 26, 27, & 28 - DATE/TIME

2.08 DATE/TIME (Programs 26, 27 & 28) defines the month, day, year, hour, minute and second for the real time clock on the A-SMDR-A PCB. This data is dependent on the actual installation time, therefore, no codes should be entered on the form. Code entry is covered in PROGRAMMING Section 6.

3. PCB OPTION FORM PREPARATION

3.01 The PCB OPTION FORM (Refer to Figure 4-2) is used to indicate the positions of switches SW1 (SW1-8 should be in the OFF position) and SW2 for selecting optional features. Reference Table 2-1 to determine the settings desired for the eight positions of each switch. Place an X in either the ON or OFF position on the PCB Option Form.

NOTE: Option Switch SW2 has been incorporated for future use, therefore, all positions (SW2-1 through SW2-8) for Option Switch SW2 should be in the OFF position.

3.02 To indicate the desired Variable Baud Rate for Option Switch SW3 place an X in the preferred slide position. Reference paragraph 3.03, Section 2.

A-SMDR-A OPTION RECORD FORM

THIS RECORD SHOULD BE LEFT AT THE JOB SITE AS PART OF THE JOB RECORD

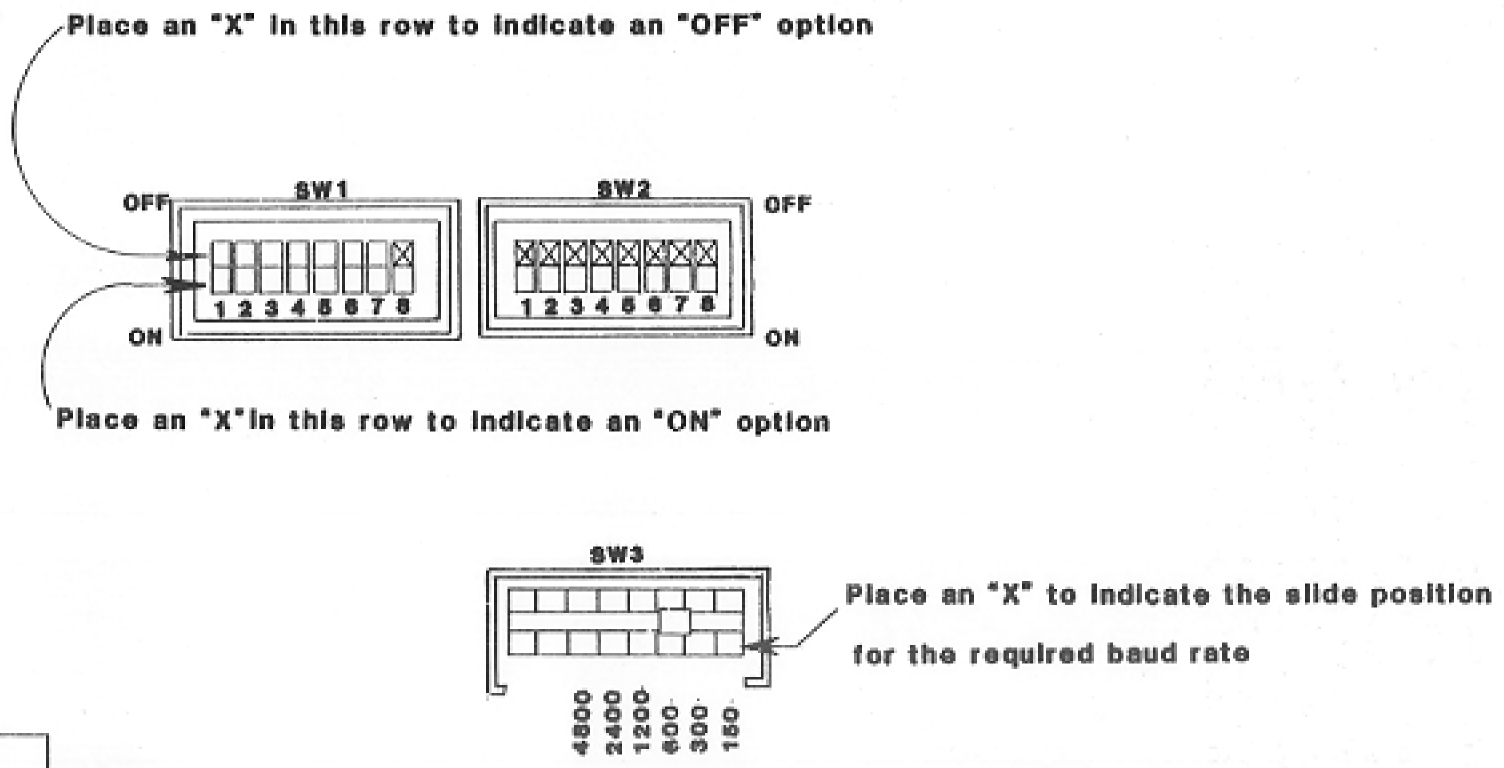

Place an "X" in this row to indicate an "OFF" option

Place an "X" in this row to indicate an "ON" option

Place an "X" to indicate the slide position for the required baud rate

SW1
SW2
OFF
ON
1 2 3 4 5 6 7 8
1 2 3 4 5 6 7 8
OFF
ON
SW3
4800
2400
1200
600
300
150

Figure 4-2 A-SMDR-A Option Record Form.

A-SMDR-A PCB INSTALLATION

CONTENTS PAGE

1. INTRODUCTION 5-1
Related Sections 5-1

2. INSTALLATION PROCEDURE 5-2
BTB-A and Battery Installation . 5-2

3. CABLE AND JACK ASSEMBLY. 5-4

4. POWER-UP 5-4

1. INTRODUCTION

1.01 The INSTALLATION section provides information on installing an A-SMDR-A PCB in a TC-12/TC-22 key telephone systems.

1.02 If this section is reissued, then the reason for the reissue will appear in this location.

RELATED SECTIONS

1.03 Related sections on the A-SMDR-A include:

SECTION 1 --- GENERAL DESCRIPTION
SECTION 2 --- FEATURES
SECTION 3 --- SYSTEM CONFIGURATION
SECTION 4 --- PROGRAM RECORD AND PCB OPTION PREPARATION FORMS
SECTION 6 --- PROGRAMMING
SECTION 7 --- OPERATIONAL TESTS AND FAULT LOCATION

1.04 Before proceeding with the installation, check that the A-SMDR-A program record form and the A-SMDR-A option record form have been completed. If these forms have not been completed, refer to Section 4, PROGRAM RECORD AND PCB OPTION FORMS PREPARATION, in this manual for instructions.

1.05 The A-SMDR-A PCB has RED EDGE and RED PULLS. This indicates that the PCB contains CMOS devices that can be damaged by static discharges. Always wear a grounded wrist strap for static protection when handling the A-SMDR-A and the system power must be off when inserting or removing the A-SMDR-A.

2. INSTALLATION PROCEDURES

CAUTION: TURN OFF the power before proceeding with the installation.

2.01 Remove the A-MPU PCB and strap as shown in figure 5-1. Reinstall the A-MPU PCB.

2.02 Remove the plastic covers on the SW1 and SW3 switch groups on the A-SMDR-A PCB. Set the SPST switches as shown on the PCB OPTION FORM (refer to figure 4-2). After replacing the plastic covers, insert the A-SMDR-A PCB in the MISC-1 position of the KSU.

BTB-A AND BATTERY INSTALLATION

2.03 The battery or fuse can be replaced on the BTB-A PCB without removing the A-SMDR-A PCB. The system remains fully operational and there is no loss of the real time clock stored in the A-SMDR-A memory.

2.04 The A-SMDR-A PCB LED will be illuminated and the ALM LED on the DSS console will flash during the following fault conditions:

(a) battery output drops below 2.5 V.
(b) the fuse blows on BTB-A PCB.
(c) the battery or BTB-A PCB is removed.

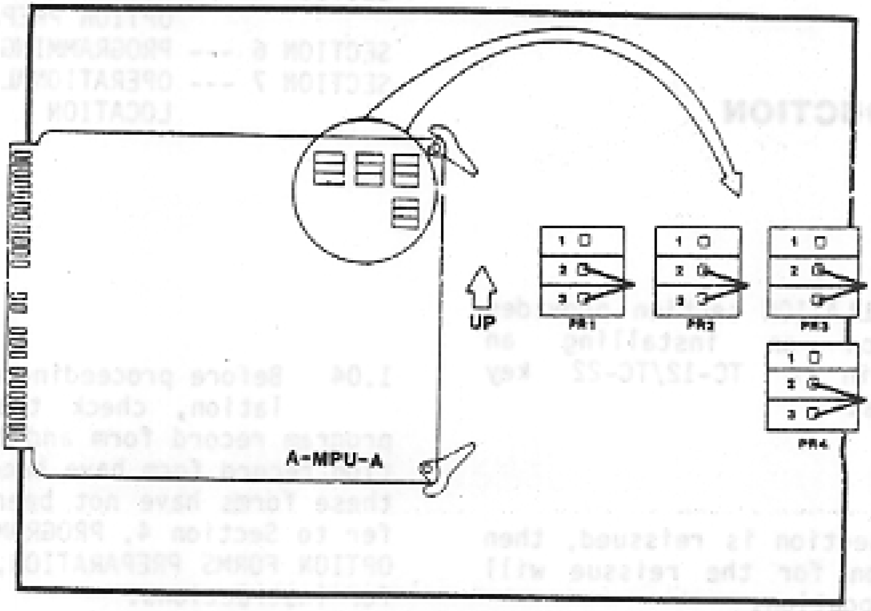

Figure 5-1 A-MPU-A Strapping.

CAUTION: To prevent accidental shorting, leave battery in plastic bag until it is to be installed on the BTB-A PCB.

2.05 Observe the polarity markings on the battery and on the BTB-A PCB. Carefully insert the battery into the clips with the proper orientation. Check the 0.25 AMP fuse to see that it is intact (refer to figure 5-2).

2.06 Insert the BTB-A PCB into the guides. The guides align the pins for insertion into the A-SMDR-A mounted connector. Push in the BTB-A PCB until the pins are fully engaged in the connector. Press the push-to-lock fastener to secure BTB-A to the A-SMDR-A.

NOTE: DO NOT place the BTB-A PCB with battery in a conductive-type static shielding bag or other conductive surface. Damage can result if the battery is recharged, short-circuited, disassembled, heated or disposed of in fire.

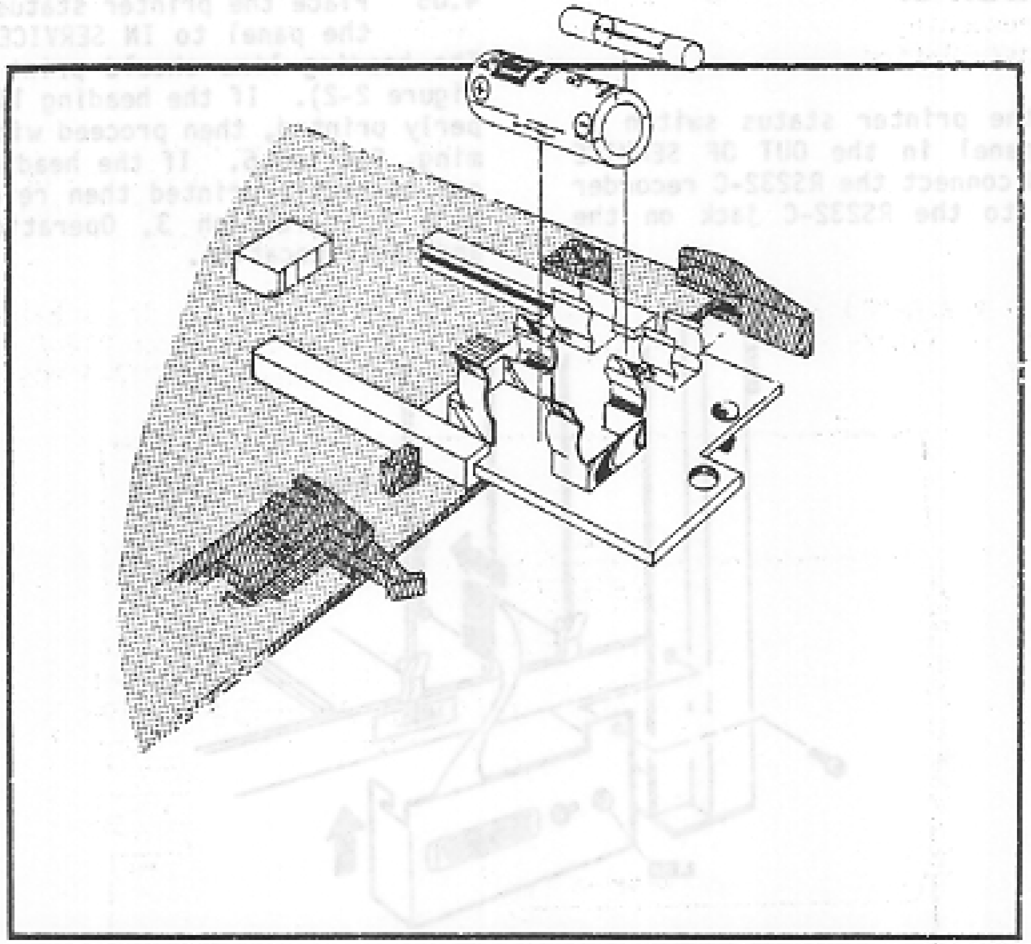

Figure 5-2 BTB-A Installation.

3. CABLE AND JACK ASSEMBLY

3.01 Mount the cable and jack assembly to the KSU and secure with the screw as shown in figure 5-3.

3.02 Plug the cable connector of the cable and jack assembly into the A-SMDR-A connector with the RED wire at the top (figure 5-3). Spread the retaining clips on the A-SMDR-A to allow entrance of the mating connector.

4. POWER UP

4.01 Put the printer status switch on the panel in the OUT OF SERVICE position and connect the RS232-C recorder input cable to the RS232-C jack on the panel.

4.02 Put SW1, on the A-NMU PCB, to the OFF position and turn ON the system power.

4.03 The LED on the A-SMDR-A should not be illuminated. If the LED is illuminated, then remove the BTB-A PCB and check the battery, battery clips and the fuse. Reinstall the BTB-A PCB after correcting the problem.

4.04 Turn on the recording device.

4.05 Place the printer status switch on the panel to IN SERVICE Position. The heading line should print (refer to Figure 2-2). If the heading line is properly printed, then proceed with Programming, Section 6. If the heading line is not correctly printed then refer to Section 7, paragraph 3, Operational Tests and Fault Location.

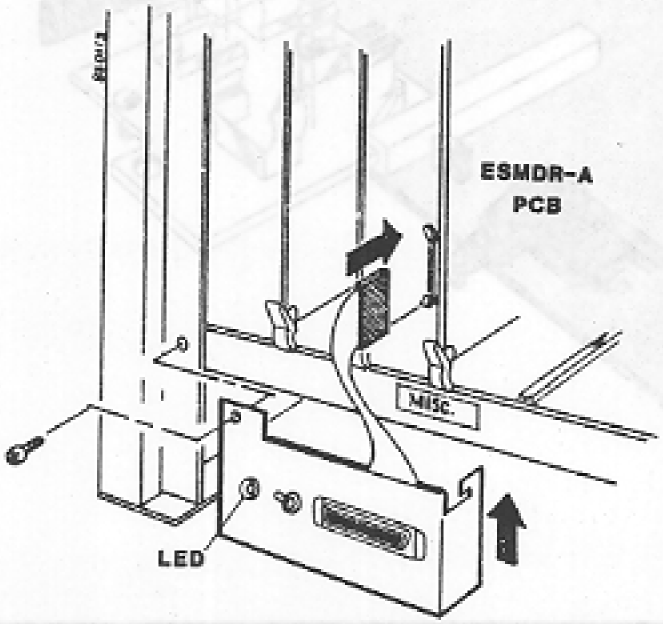

Figure 5-3 Mounting Cable and Jack Assembly to the KSU.

A-SMDR-A PCB PROGRAMMING

CONTENTS PAGE

1. INTRODUCTION 6-1
   Related Sections 6-1

2. PROGRAMMING PROCEDURES 6-1

3. PROGRAMS 6-2
   Program 21 - Line Ring Groups. . 6-2
   Program 22 - Ring Group Stations 6-2
   Program 23 - Common Audible Group 6-3
   Programs 24 & 25 6-3
   Program 26 - Month and Date . . 6-3
   Program 27 - Year & Hour 6-4
   Program 28 - Minutes & Seconds . 6-4

1. INTRODUCTION

1.01 The PROGRAMMING section provides detailed instructions on programming a system equipped with the A-SMDR-A PCB.

1.02 If this section is reissued, then the reason for reissue will appear in this location.

RELATED SECTIONS

1.03 Related sections on the A-SMDR-A include:

SECTION 1 --- GENERAL DESCRIPTION
SECTION 2 --- FEATURES
SECTION 3 --- SYSTEM CONFIGURATION
SECTION 4 --- PROGRAM RECORD AND PCB OPTION PREPARATION FORMS
SECTION 5 --- INSTALLATION
SECTION 7 --- OPERATIONAL TESTS AND FAULT LOCATION

1.04 When an A-SMDR-A PCB is installed in a system, the system must be entirely reprogrammed. Initialization instructions and basic programs are found in the TC-12/TC-22 Installation Manual. This document only contains programming information for A-SMDR-A operation.

2. PROGRAMMING PROCEDURE

2.01 The paragraphs in this section provide system programming procedures for A-SMDR-A operation.

2.02 The following steps must be executed before any system programming is begun:

- Verify that switch SW1 on the A-NMU is in the ON position.
- Remove handset on the primary attendant's station from its cradle.
- Press the DATA ENTRY key on the DSS console.

3. PROGRAMS

3.01 The following paragraphs describe the program procedures for the A-SMDR-A, and should be used with the completed Program Record Form. For all programs not covered in the following, refer to the TC-12/TC-22 System manual.

PROGRAM 21 - LINE RING GROUPS

3.02 Program 21 is used to assign CO lines to Line Ring Groups. When a CO line is in the ringing mode, assignments to RING GROUPS cannot be changed.

Programming procedure:

(a) Refer to paragraph 2.02.

(b) Press DSS console key 21.

Display = | 0 | 0 | 0 | 0 |

(c) Enter LINE RING GROUP number, begin with Line Ring Group 1.

Display = | 0 | y | 0 | 0 |

(y represents the ring group number.)

(d) Dial * once.

Display = | 0 | y | 0 | 0 |

(e) Dial number for last CO line to be assigned to this ring group.

Display = | 0 | y | x | x |

(xx represents the line number)

(f) Dial * once.

(g) Repeat procedure for Line Ring Groups 2 and 3 starting at step (c).

(h) Dial # to leave program.

(i) Press DATA ENTRY key to resume call processing, or proceed to step (b) of another program.

PROGRAM 22 - RING GROUP STATIONS

3.03 Program 22 is used to assign stations to LINE RING GROUPS. When a CO line is in the ringing mode, assignments to RING GROUPS cannot be changed.

Programming procedure:

(a) Refer to paragraph 2.02.

(b) Press DSS console key 22.

Display = | 0 | 0 | 0 | 0 |

(c) Dial RING GROUP NUMBER, beginning with Ring Group 1.

Display = | 0 | 0 | 0 | x |

(x represents Ring Group)

(d) Dial * once.

Display = | 0 | 1 | 0 | 0 |

(01 in boxes AB indicates 1st station in the group.)

(e) Enter 1st station in group as shown on the program record form.

Display = | 0 | 1 | x | x |

(xx represents station number.)

(f) Dial * once.

Display = | 0 | 2 | 0 | 0 |

(g) Repeat procedures for each station in the group up to 10 stations. If less than 10 stations are entered, then enter 00 as the last station.

(h) Dial # once to leave program.

(i) Repeat procedures for each remaining Ring Group starting at step (b).

(j) Press DATA ENTRY key to resume call processing, or proceed to step (b) of another program.

PROGRAM 23 - COMMON AUDIBLE GROUP

3.04 Program 23 is used to assign stations to the COMMON AUDIBLE GROUP. When a CO line is in the ringing mode, assignments to RING GROUPS cannot be changed.

Programming procedure:

(a) Refer to paragrah 2.02.

(b) Press DSS console key 23.

Display = $\boxed{0\,1\,y\,y}$

(yy represents numbers previously entered or assigned by initialization)

Initialization assigns the primary DSS telephone station as the 1st station in the Common Audible Group.

(c) Enter the 1st station in the group as shown on the program record form, if different than the DSS, or proceed to next step.

Display = $\boxed{0\,1\,x\,x}$

(xx represents station numbers.)

(d) Dial * once.

Display = $\boxed{0\,2\,y\,y}$

(yy represents numbers previously entered or assigned by initialization)

Initialization assigns the secondary DSS telephone station as the 2nd station in the Common Audible Group.

(e) Enter the 2nd station in the group as shown on the program record form, if different than the DSS, or proceed to next step.

Display = $\boxed{0\,2\,x\,x}$

(xx represents station numbers)

(f) Dial * once.

Display = $\boxed{0\,3\,0\,0}$

(g) Repeat steps (e) and (f) for each station in the group up to 10 stations. If less than 10 stations are entered, then enter 00 as the last station.

(h) Dial # to leave program.

(i) Press DATA ENTRY key to resume call processing, or proceed to step (b) of another program.

PROGRAMS 24 AND 25.

3.05 Programs 24 and 25 are not used.

PROGRAM 26 (MONTH AND DATE)

3.06 Program 26 is used to enter the month and date for real time clock.

Programming procedure:

(a) Refer to paragraph 2.02.

(b) Press DSS console key 26.

Display = $\boxed{z\,z\,z\,z}$

(z represents initialization code)

(c) Dial * once.

Display = b b z z

(b represents a blank)

(d) Enter month as 01 through 12.

Display = x x z z

(xx represents the month.)

(e) Dial * once.

Display = x x b b

(xx represents the month, b represents a blank

(f) Enter date as 01 through 31.

Display = x x y y

(xx represents the month, yy represents the date.)

(g) Dial * once.

Display = 0 0 0 0

(h) Dial # to leave program.

(i) Press DATA Entry key to resume call processing, or proceed to step (b) of another program.

PROGRAM 27 - YEAR AND HOUR

3.07 Program 27 is used to enter the year and hour for the real time clock.

Programming procedure:

(a) Refer to paragraph 2.02.

(b) Press DSS console key 27.

Display = z z z z

(z represent initialization code)

(c) Dial * once.

Display = b b z z

(b represents a blank)

(d) Enter the year (last 2 digits).

Display = x x z z

(xx represents the year.)

(e) Dial * once.

Display = x x b b

(xx represents the year, b represents a blank)

(f) Enter the hour as 00 through 23.

Display = x x y y

(xx represents the year & yy represents the hour.)

(g) Dial * once.

Display = 0 0 0 0

(h) Dial # to leave program.

(i) Press DATA ENTRY key to resume call processing, or proceed to step (b) of another program.

PROGRAM 28 - MINUTES AND SECONDS

3.08 Program 28 is used to enter the minutes and seconds of the real time clock.

Programming procedure:

(a) Refer to paragraph 2.02.

(b) Press DSS console key 28.

Display = z z z z

(z represents initialization code, display shows minutes and seconds. Seconds will advance.)

(c) Dial * once.

Display = $\boxed{b}\boxed{b}\boxed{z}\boxed{z}$

(b represents a blank)

(d) Enter the minutes.

Display = $\boxed{x}\boxed{x}\boxed{z}\boxed{z}$

(xx represents the minutes)

(e) Dial * once.

Display = $\boxed{x}\boxed{x}\boxed{b}\boxed{b}$

(xx represents the minutes,
b represents a blank)

(f) Enter the seconds.

Display = $\boxed{x}\boxed{x}\boxed{y}\boxed{y}$

(xx represents the minutes and yy the seconds.)

(g) Dial * once.

Display = $\boxed{0}\boxed{0}\boxed{0}\boxed{0}$

(h) Dial # to leave program.

(i) Press DATA ENTRY key to resume call processing, or proceed to step (b) of another program.

A-SMDR-A PCB OPERATIONAL TESTS AND FAULT LOCATIONS

CONTENTS PAGE

1. INTRODUCTION 7-1
Related Sections 7-1

2. OPERATIONAL TEST 7-1

3. FAULT LOCATION 7-2
A-SMDR-A/Recorder Interface . . 7-2
A-SMDR-A Option Tests 7-2

1. INTRODUCTION

1.01 The OPERATIONAL TEST AND FAULT LOCATION section provides information and procedures for testing and locating faults in a TC-12/TC-22 system equipped with an A-SMDR-A PCB.

1.02 If this section is reissued, then the reason for the reissue will appear in this location.

RELATED SECTIONS

1.03 Related sections on the A-SMDR-A include:

SECTION 1 --- GENERAL DESCRIPTION
SECTION 2 --- FEATURES
SECTION 3 --- SYSTEM CONFIGURATION
SECTION 4 --- PROGRAM RECORD AND PCB OPTION PREPARATION FORMS
SECTION 5 --- INSTALLATION
SECTION 6 --- PROGRAMMING

2. OPERATIONAL TEST

2.01 The operational test in this manual has been divided into two categories: (1) A-SMDR-A/Recorder Interface tests and (2) A-SMDR-A option tests.

2.02 In order to minimize the time required to test the system, the tests should be conducted in the following order:

(1) A-SMDR-A/Recorder Interface tests.
(2) Operational tests as detailed in the TC-12/TC-22 Installation Manual.
(3) A-SMDR-A optional tests.

2.03 When the A-SMDR-A PCB is installed, telephone operation is altered for stations having Class Of Service 0 or 1. In order to make a proper record of all calls made, stations with these classes are not allowed to dial on incoming calls until operation of the flash key. On a direct CO line connection , operation of the flash key terminates the incoming call and, if appropriate, SMDR data is transmitted.

2.04 Behind a PBX, pressing the flash key and dialing PBX access codes will, if appropriate, cause SMDR data to be transmitted and initiate an outgoing call record for the outgoing call. Operation of the flash key allows outgoing dialing. A second operation of the flash key will deny outgoing dialing. This modification may be noted during the station test category of the installation manual.

3. FAULT LOCATION

3.01 If a problem develops during operational tests of the A-SMDR-A/Recorder interface or A-SMDR-A options, refer to the following paragraphs. For additional information on system fault locations, refer to the TC-12/TC-22 Installation manual.

A-SMDR-A/RECORDER INTERFACE

3.02 If the header line is not printed, or printed incorrectly when the printer status switch is placed in the OUT OF SERVICE to IN SERVICE position, the following items should be checked:

a) System power ON.
b) Recorder power switch ON.
c) Interface cable connected.
d) RS232C cable connected.
e) RS232C cable wiring (pin 20).
f) Baud rate compatibility.
g) Proper A-MPU card strapping.
h) Instructions for printer.

3.03 If the printer does not function satisfactorily after checking the items in paragraph 3.02, then replace the A-SMDR-A PCB and installation kit.

A-SMDR-A OPTION TESTS

3.04 If proper results are not obtained when making the option tests, do the following:

1) Put on grounded wrist strap.
2) Turn OFF system power.
3) Remove the A-SMDR-A card.
4) Verify the setting of the appropriate option switch(es).
5) Return the card to the KSU.
6) Turn ON system power.

3.05 If the above steps fail to solve the problem, replace the A-SMDR-A.

Category 1 -- A-SMDR-A/RECORDER INTERFACE

TEST	VERIFICATION
At the A-SMDR-A panel, turn the PRINTER STATUS SWITCH from the OUT OF SERVICE to the IN SERVICE position.	HEADER LINE printed as shown in Figure 2-2

Category 2 - A-SMDR-A OPTION TESTS

NOTE:
The following tests assume that the A-SMDR-A interface test (category 1) was successful and that the A-SMDR-A card and printer are functioning properly.

TEST	VERIFICATION
1. Account Code Entry	
a) If option switch SW1-4 ON.	
(1) From a key telephone, lift the handset.	Station key illuminated at DSS console.
(2) Press a line key.	Dial tone available in handset. Line key is illuminated at all stations.
(3) Dial a known number.	Call completed.
(4) Hangup.	Line releases and all LEDs extinquished
b) If option switch SW1-4 OFF.	
(1) Perform steps in a) above.	Same as above except dialing not permitted.
(2) Dial #, 9, #, followed by a known number.	Dialing now permitted and call completed as above.
(3) Hangup.	Line releases and all LEDs go out.
2. Outgoing Call Print:	
a) If option switch SW1-1 ON.	
(1) From a key telephone, make a 7-digit call (add PBX access digit if required).	Call completed.
(2) After more than 1 minute, hangup.	Line releases, all LEDs go out, and SMDR data printed.
b) If option switch SW1-1 OFF.	
(1) Perform steps in 2a) above.	Same as test 2a) above, except SMDR data not printed.
(2) Make a call with more than 7 digits.	Call completed.

A-SMDR-A OPTION TESTS continued

TEST	VERIFICATION
(3) After more than 1 minute, hangup.	Same as 2a) above with data printed.
3. Call Time Duration:	
a) If option switch SW1-2 ON.	
(1) From a key telephone, make a call as required in Test 2 to obtain an SMDR print-out.	Call completed.
(3) After 30 seconds, hangup.	Data printed.
b) If option switch SW1-2 OFF.	
(1) Perform all steps in 3a) above.	Call completed and data not printed.
(2) Remake call.	Call completed.
(3) After 1 minute, hangup.	Data printed.
4. Incoming Call Print:	
a) If option switch SW1-5 ON.	
(1) From a key telephone, make a call to another line in the system.	Incoming call rings in.
(2) Answer the incoming call.	Call completed
(3) Hang-up at both telephones.	Outgoing call printed (if appropriate). Incoming call printed.
b) If option switch SW1-5 OFF.	
(1) Perform steps in 4a.	Outgoing call only printed (if appropriate).
(2) Repeat step 4a(1).	Incoming call rings in.
(3) Answer the incoming call.	Incoming and outgoing stations connected.
(4) At the answering station, dial #, 9, #, and hangup.	Outgoing call printed (if appropriate). Incoming call printed.

A-SMDR-A OPTION TESTS continued

TEST	VERIFICATION
5. **Restricted Call Print:**	
a) If option switch SW1-6 ON.	
(1) From a restricted telephone, make an outgoing restricted call.	Fast busy tone returned. After 5-10 seconds, station disconnected. SMDR data not printed.
b) If option switch SW1-6 OFF.	
(1) Perform steps in 5a.	Same as above, except data printed.
7. **Off-Hook Alert Tone:**	
a) If option switch SW1-7 ON.	
(1) From a key telephone, make an outgoing call to another line in the system.	Call rings in.
(2) Answer the incoming call.	Both stations connected.
(3) Keep both stations off-hook for more than 3 minutes. Listen to handset at the 3 minute interval.	No beep tone at the 3-minute interval.
b) If option switch SW1-7 OFF.	
(1) Perform all steps in 6a.	Same as 6a), except a beep tone is received at the 3-minute interval.

END OF A-SMDR-A OPTION TESTS

INSTALLER NOTES ON A-SMDR-A OPTION TESTING:

STATUS SHEET

Product: A-SMDR-A

Document Number: TP13187-10

Issue: 1-1

Revision Date: **January 26, 1982**

Page	Issue	Date	Page	Issue	Date
1-1	1-0	12Oct82			
1-2	1-1	26Jan83			
1-3	1-1	26Jan83			
1-4	1-1	26Jan83			
2-1	1-0	12Oct82			
2-2	1-1	26Jan83			
2-3	1-1	26Jan83			
2-4	1-0	12Oct82			
2-5	1-0	12Oct82			
3-1	1-0	12Oct82			
4-1	1-0	12Oct82			
4-2	1-0	12Oct82			
4-3	1-0	12Oct82			
4-4	1-0	12Oct82			
4-5	1-1	26Jan83			
5-1	1-0	12Oct82			
5-2	1-1	26Jan83			
5-3	1-0	12Oct82			
5-4	1-1	26Jan83			
6-1	1-0	12Oct82			
6-2	1-0	12Oct82			
6-3	1-0	12Oct82			
6-4	1-0	12Oct82			
6-5	1-0	12Oct82			
7-1	1-0	12Oct82			
7-2	1-1	26Jan83			
7-3	1-0	12Oct82			
7-4	1-0	12Oct82			
7-5	1-0	12Oct82			

TECHNICAL ASSISTANCE

When problems or questions arise during installation or servicing that cannot be resolved using this or related documents, then contact TIE Technical Service Department as follows:

For assistance between 8:30 AM and 5:00 PM, Eastern time, call:

(203) 926-2033

For assistance in the event of an ***ABSOLUTE*** emergency at other times than those listed, call:

(203) 929-7920

Printed in U.S.A.