TV mini-transmitter without Transformer.

This is an improvement to avoid transformer usage. By an amplifier help, it is possible to modulate the oscillator frequency to be able of transmitting the audio signal, and we must consider that the signal is applied by the operational amplifier IC input in regard to floating GND (Tierra Flotante), since the main power supply is divided into two GNDs to work as a symmetric power supply to make the operational IC work.

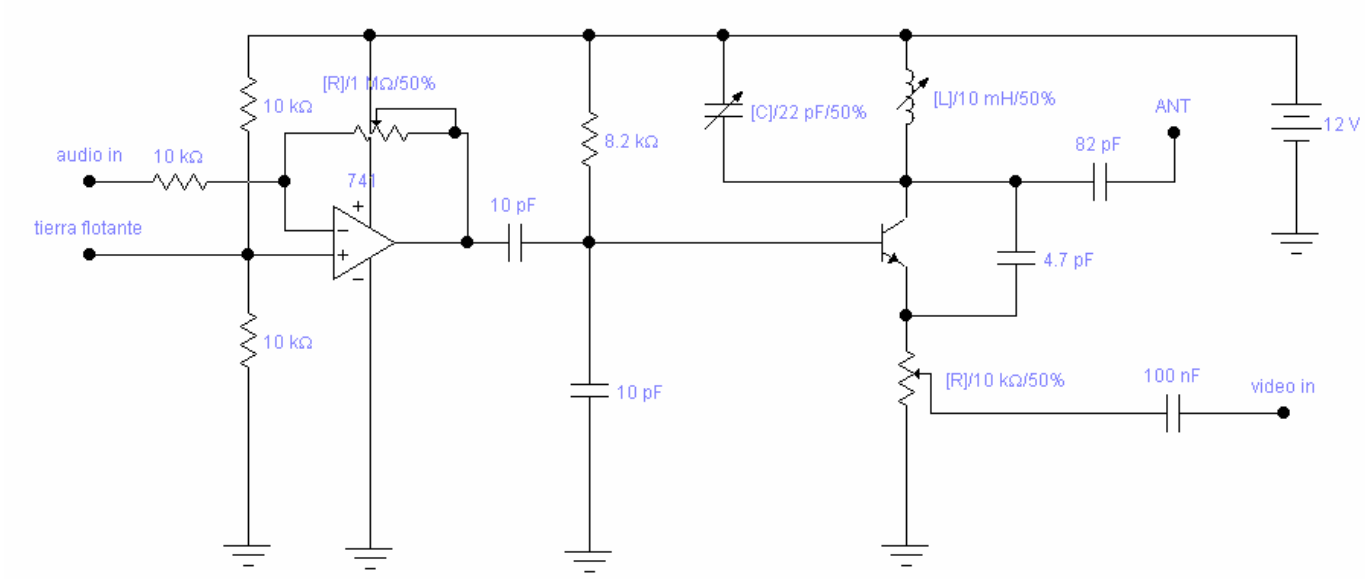

Translation: Milhen Christian Achar

HAM Callsign: ZP5ZDM